SIGN	DATE	DESCRIPTION	APPROVER

THIS IS CAD DRAWING, DO NOT REVISE MANUALLY!!!

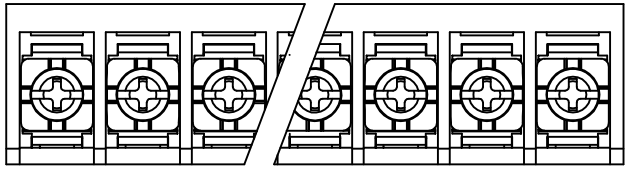

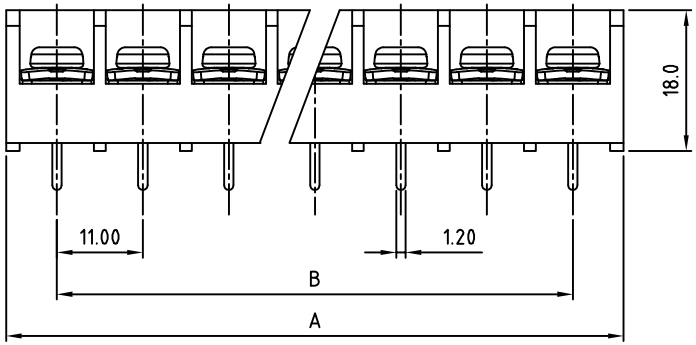

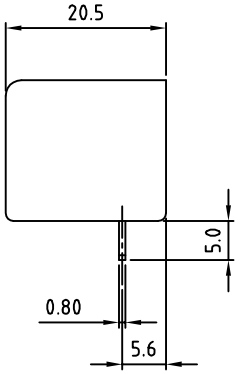

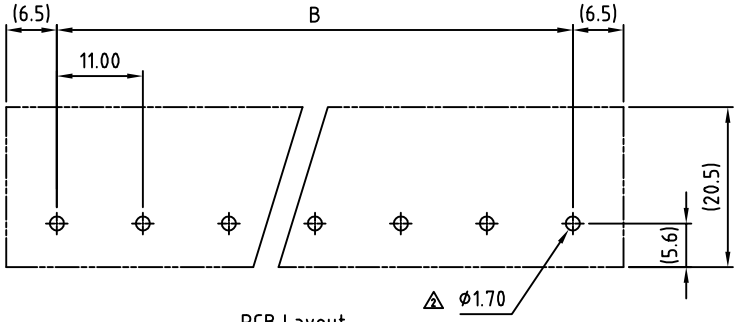

PCB Layout

SPECIFICATIONS

ELECTRICAL

VOLTAGE & CURRENT:	300 V, 30 A
WITHSTANDING VOLTAGE:	AC 2000 V/Min
INSULATION RESISTANCE:	1000 MΩ OR MORE AT DC 500 V
TEMPERATURE RANGE:	-40 °C ~ +105 °C
SCREW TORQUE VALUE:	9.5 Lb-In.
WIRE RANGE:	22 - 10 (str/sol) AWG
1) MOLDED PARTS:	POLYMIDE 66, UL 94 V-0 BLACK
2) TERMINAL:	BRASS, 0.8t, Tin PLATED
3) TERMINAL SCREWS:	STEEL, Ni PLATED, M4

- Safety Approval: c us

RoHS Compliant

PART NUMBER:

OSTYK551XX030

No. of Poles
- 02: 2 Poles
- 03: 3 Poles
- 04: 4 Poles
- ⋮
- 20: 20 Poles

POLE	2	3	4	5	6	7	8	9	10	11	12	13	14	15	16
A	24.00	35.00	46.00	57.00	68.00	79.00	90.00	101.0	112.0	123.0	134.0	145.0	156.0	167.0	178.0
B	11.00	22.00	33.00	44.00	55.00	66.00	77.00	88.00	99.00	110.0	121.0	132.0	143.0	154.0	165.0
TOL	±0.30			±0.40				±0.50							

POLE	17	18	19	20
A	189.0	200.0	211.0	222.0
B	176.0	187.0	198.0	209.0
TOL	±0.60			

THESE DRAWINGS AND SPECIFICATIONS ARE THE PROPERTY OF ON-SHORE TECHNOLOGY, INC. AND SHALL NOT BE REPRODUCED, COPIED OR USED IN ANY MANNER WITHOUT THE PRIOR WRITTEN CONSENT OF ON-SHORE TECHNOLOGY, INC.

ON-SHORE TECHNOLOGY, INC.

TITLE	OSTYK-551 w/o Flange Series				
PART NO.	OSTYK551XX030			DWG NO.	OSTYK551XX030.DWG
APPROVED	CHECKED	DESIGNED	DRAWN	CUST NO.	
Shi Jun 2006.11.07	Seamus 2006.11.06	Steady 2006.10.21	Steady 2006.10.21	UNIT: mm / SCALE: NONE / SHEET: 01/01 / REV.: D	

Tolerance	
X.	±0.50
X.X	±0.30
X.XX	±0.10
X°	±1°

Downloaded from Arrow.com.