CUI Devices is now Same Sky! Learn More

MODEL: CMR-12062S-67 | DESCRIPTION: RECEIVER

FEATURES

- IPX7 rated face
- protection against dust and water ingression
- dynamic receiver
- small footprint
- spring contacts

SPECIFICATIONS

parameter	conditions/description	min	typ	max	units
input power			20	30	mW
impedance	at 1.0 kHz, 0.8 Vrms in free air	27.2	32	36.8	Ω
coil resistance		23.8	28	32.2	Ω
resonant frequency (Fo)	at 0.8 Vrms in free air	360	450	540	Hz
frequency response		300		7,000	Hz
sound pressure level	at 1 kHz with Type 3.2 HL Ear, 0.8 Vrms	114	117	120	dB
distortion	see THD curve				%
buzz, rattle, etc.	must be normal at sine wave, 0.3~7 kHz		0.8		Vrms
polarity	cone moves forward w/ positive dc current to “+” terminal				
dimensions	12 x 6 x 2				mm
magnet	Nd-Fe-B				
cone material	PEEK				
weight			0.4		g
operating temperature		-20		70	°C
storage temperature		-40		85	°C
RoHS	yes				
IP level	IPX7 (front side)				

Notes: 1. All specifications measured at 15~35°C, humidity at 25~75%, under 86~106 kPa pressure, unless otherwise noted.

Downloaded from Arrow.com.

MECHANICAL DRAWING

units: mm
tolerance: ±0.2 mm

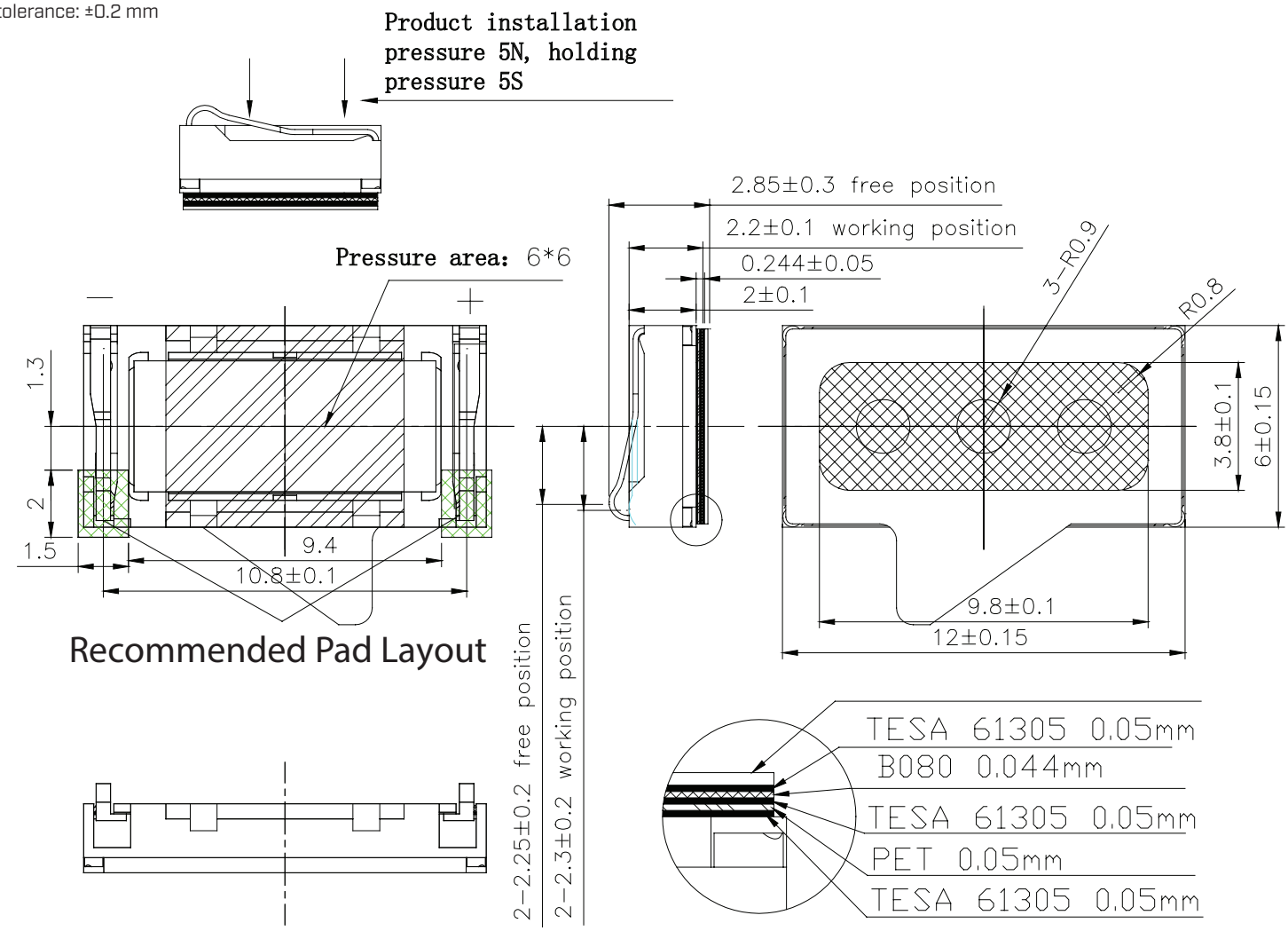

Downloaded from Arrow.com.

RESPONSE CURVES

Frequency Response Curve

Test Conditions: 0.8 Vrms / Type 3.2 HL Ear

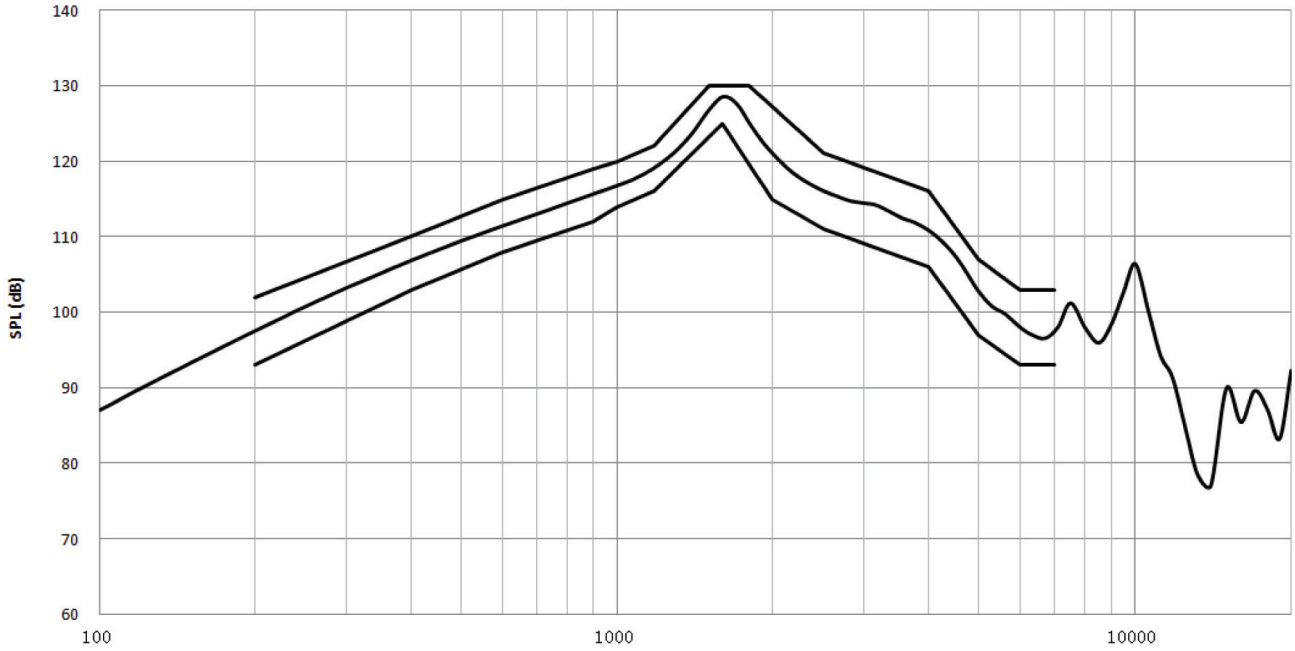

Total Harmonic Distortion Curve

Test Conditions: 0.8 Vrms / Type 3.2 HL Ear

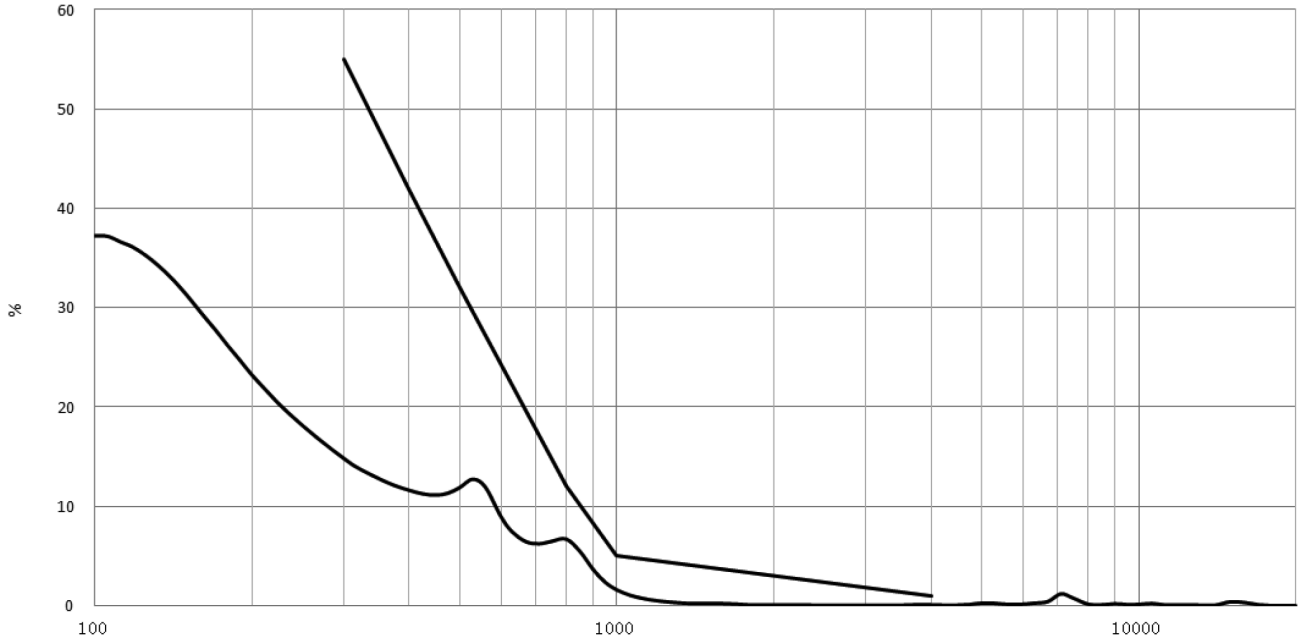

THIELE-SMALL PARAMETERS

parameter	conditions/description	typ
Mechanical Q Factor	Qms	2.989
Electrical Q Factor	Qes	10.666
Total Q Factor	Qts	2.335
Compliance Equivalent Volume	Vas	0.001

Notes: 2. Results represent typical performance in Free Air conditions.

Downloaded from Arrow.com.

PACKAGING

units: mm

Tray Size: 325 x 250 mm
Carton Size: 345 x 260 x 280 mm
Tray QTY: 200 pcs per tray
Carton QTY: 4,800 pcs per carton

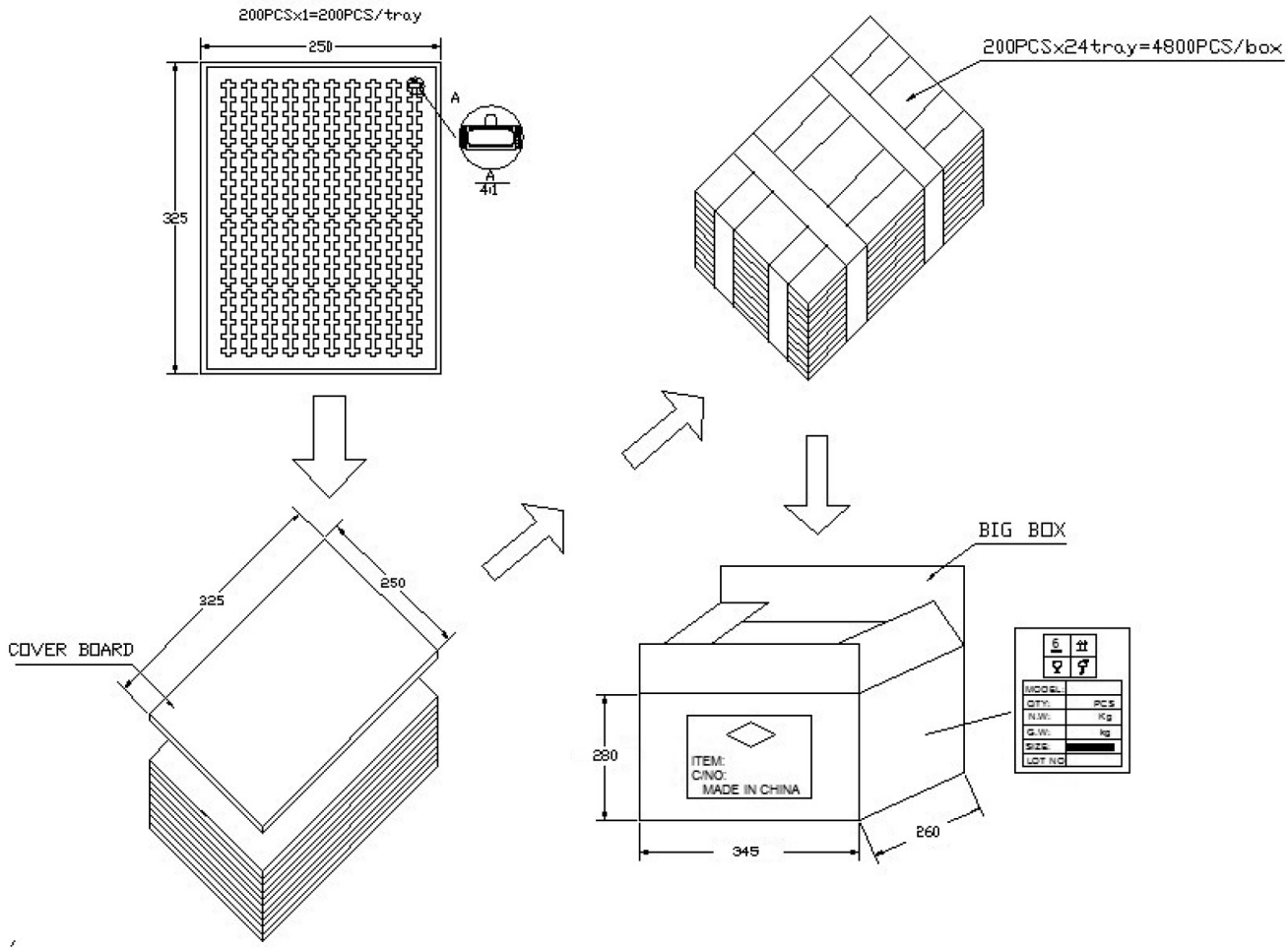

Downloaded from Arrow.com.

REVISION HISTORY

rev.	description	date
1.0	initial release	07/24/2018
1.01	brand update	01/23/2020
1.02	updated packaging	05/14/2020
1.03	logo, datasheet style update	08/05/2022
1.04	updated datasheet	05/20/2024
1.05	CUI Devices rebranded to Same Sky	09/12/2024
1.06	changed gasket	10/09/2024
1.07	added Thiele-Small Parameters	03/24/2025
1.08	updated IP rating	04/18/2025
1.09	changed gasket	06/23/2025

The revision history provided is for informational purposes only and is believed to be accurate.

Same Sky offers a one (1) year limited warranty. Complete warranty information is listed on our website.

Same Sky reserves the right to make changes to the product at any time without notice. Information provided by Same Sky is believed to be accurate and reliable. However, no responsibility is assumed by Same Sky for its use, nor for any infringements of patents or other rights of third parties which may result from its use.

Same Sky products are not authorized or warranted for use as critical components in equipment that requires an extremely high level of reliability. A critical component is any component of a life support device or system whose failure to perform can be reasonably expected to cause the failure of the life support device or system, or to affect its safety or effectiveness.

Downloaded from Arrow.com.