M10/10.ST1.IP20

TE Connectivity has acquired the DIN Rail Terminal Block product range from ABB

Products → Low Voltage Products and Systems → Connection Devices → Terminal Blocks → Solution Series

General Information

Extended Product Type:	M10/10.ST1.IP20
Product ID:	1SNA399723R0400
EAN:	3472593997239
Catalog Description:	M10/10.ST1.IP20 Screw Clamp Terminal Blocks

Ordering

Minimum Order Quantity:	25 piece
Customs Tariff Number:	85369010

Popular Downloads

Data Sheet, Technical Information:	1SNC160001C0207-CH-A screw clamp
Instructions and Manuals:	1SNC160001C0207-CH-A screw clamp

Dimensions

Product Net Width:	10 mm
Product Net Height:	77 mm
Product Net Depth / Length:	54.8 mm
Product Net Weight:	39 g

Technical

Number of Levels:	1

Environmental

RoHS Status:	Following EU Directive 2002/95/EC August 18, 2005 and amendment

Certificates and Declarations (Document Number)

Declaration of Conformity - CE:	1SND225015U1000
EAC Certificate:	1SND161009A1100
Environmental Information:	1SND220002E1002
Instructions and Manuals:	1SNC160001C0207-CH-A screw clamp
RoHS Information:	1SND230023F0208

Classifications

Object Classification Code:	X

Container Information

Downloaded from Arrow.com.

Package Level 1 Units:	25 piece
Package Level 1 Width:	82 mm
Package Level 1 Depth / Length:	265 mm
Package Level 1 Height:	65 mm
Package Level 1 Gross Weight:	0.975 kg
Package Level 1 EAN:	3472593997239
Package Level 2 Units:	250 piece
Package Level 2 Width:	300 mm
Package Level 2 Depth / Length:	500 mm
Package Level 2 Height:	150 mm
Package Level 3 Units:	12000 piece
Product Packing Type:	Box

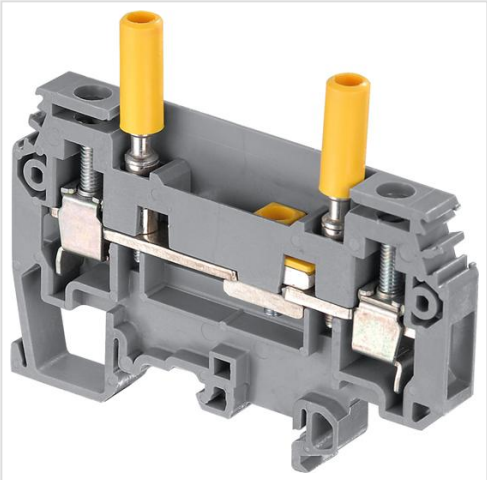

Downloaded from Arrow.com.