THIS DRAWING AND THE SUBJECT MATTER SHOWN THEREON ARE CONFIDENTIAL AND THE PROPERTY OF BEL/STEWART/TRP CONNECTOR AND SHALL NOT BE REPRODUCED, COPIED, OR USED IN ANY MANNER WITHOUT THE WRITTEN CONSENT OF TRP CONNECTOR.

PRODUCT MAY BE PROTECTED BY ONE OR MORE OF THE FOLLOWING US PATENTS:
5736910 5939955 6425781 6428361 6554638 6840817 7123117
7429195 7717749 7808751 6217391 6149050 7924130

REVISIONS

P	LTR	DESCRIPTION	DATE	DWN	APVD
	G	EC-1411035 COMPANY LOGO CHANGE	14JAN2015	TL	KZ

MECHANICAL:

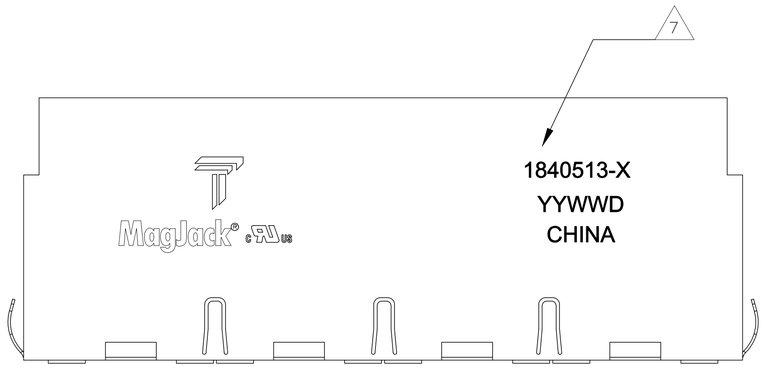

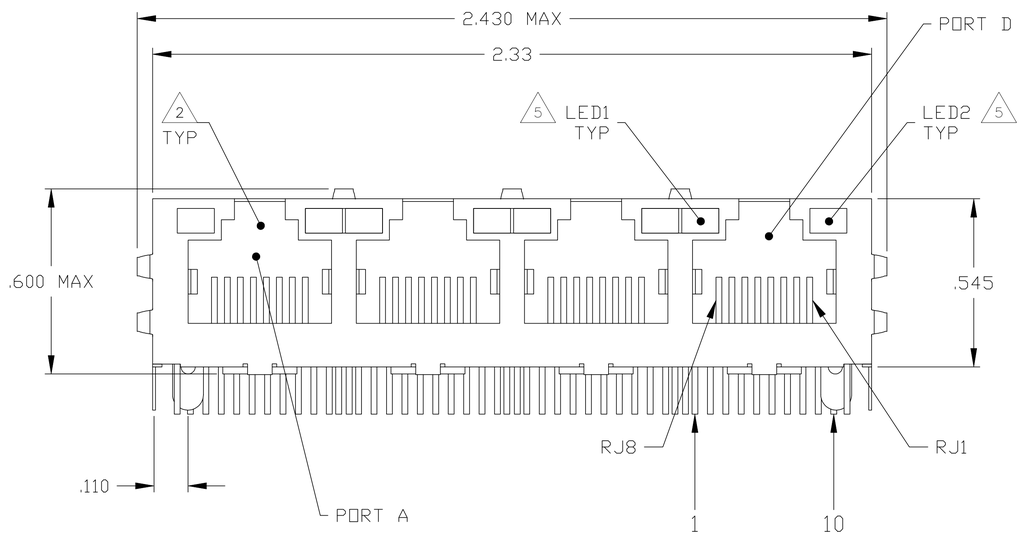

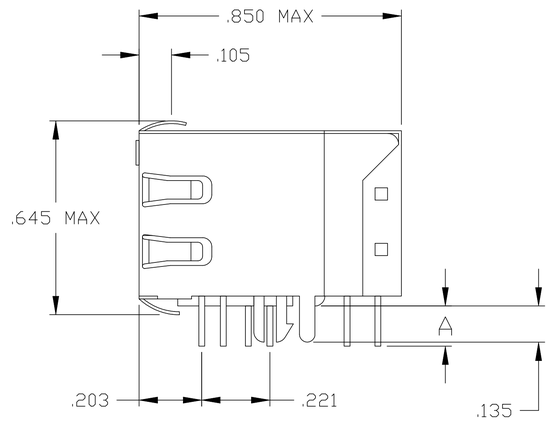

1 MATERIALS:
- HOUSING - THERMOPLASTIC PET POLYESTER FLAMMABILITY RATING UL 94V-0.
- SHIELD - .010" THICK, C26800 BRASS PREPLATED WITH 30µINCH MIN SEMI-BRIGHT NICKEL. SOLDER TABS POST DIPPED WITH 100µINCH MIN SAC SOLDER.
- MOD JACK CONTACTS - 0.0157 X 0.018" PHOSPHOR BRONZE, 50µINCH MIN OVERALL NICKEL UNDERPLATE WITH SELECT 50µINCH MIN HARD GOLD FINISH PLATE. SOLDERTAILS WITH 100µINCH MIN MATTE TIN AND/OR SAC SOLDER DIP.
- LIGHT EMITTING DIODE(LED) - DIFFUSED EPOXY LENS, .020" X .020" CARBON STEEL WIREFRAME LEADS PRE-PLATED WITH 80µINCH SILVER OVER 40µINCH NICKEL UNDERPLATE OVER 40µINCH COPPER UNDERPLATE. POST-PLATED WITH 100µIN MIN MATTE TIN AND/OR SAC SOLDER DIP OR PURE TIN SOLDER DIP.

2 RJ45 JACK CAVITY CONFORMS TO FCC RULES AND REGULATIONS PART 68, SUB PART F.

3 MAGNETICS
- IMPEDANCE: 100 OHMS
- TURNS RATIO (CHIP:CABLE): 1:1 ALL FOUR PAIRS
- OPEN CIRCUIT INDUCTANCE (OCL): 350µH MIN @100kHz, 0.1VRMS, 8mADC BIAS FROM 0°C TO 70°C, ALL FOUR PAIRS
- ALL FOUR PAIRS BI-DIRECTIONAL
- PERFORMANCE @ 25°C:
  - INSERTION LOSS (IL): 1.1dB MAX FROM 0.5MHz TO 100MHz
  - RETURN LOSS (RL): 18dB MIN FROM 0.5MHZ TO 40MHz
    12-20LOG(f/80)dB MIN FROM 40.1MHz TO 100MHz
  - CROSSTALK ATTENUATION: 35dB MIN FROM 0.5MHz TO 40MHz
    33-20*LOG(f/50)dB MIN FROM 40.1MHz TO 100MHz
  - COMMON MODE REJECTION RATIO (CMRR): 30dB MIN FROM 0.5MHz TO 100MHz
- ISOLATION VOLTAGE: COMPLIES WITH IEEE802.3 2002, PARA 40.6.1.1, ITEM b.

4 OPERATING TEMPERATURE: FROM 0°C TO +70°C.

5 THE 250 OHM LED RESISTORS ARE OPTIONAL, PLEASE SEE CHART FOR PRESENCE OR ABSENCE OF LED RESISTORS. IF THE LED WITHOUT 250 OHM RESISTORS, LED IS DRIVEN WITH CONSTANT CURRENT AT APPROX 20mA.
LED COLOR: DOMINANT WAVELENGTH (λD): GREEN 568 nm TYP. @ IF=20mA
FORWARD VOLTAGE (VF): GREEN 2.2V TYP. @ IF=20mA
DOMINANT WAVELENGTH (λD): YELLOW 588 nm TYP. @ IF=20mA
FORWARD VOLTAGE (VF): YELLOW 2.1V TYP. @ IF=20mA.
DOMINANT WAVELENGTH (λD): ORANGE 605 nm TYP. @ IF=20mA
FORWARD VOLTAGE (VF): ORANGE 2.05V TYP. @ IF=20mA.
IF THE LED WITH 250 OHM RESISTORS,LED IS DRIVEN WITH 5V VOLTAGE AND THE MAX OPERATING CURRENT IS 20mA.
LED COLOR : DOMINANT WAVELENGTH (λD): GREEN 568 nm TYP. @ VF=5V
FORWARD CURRENT (IF): GREEN 12 mA TYP. @ VF=5V
DOMINANT WAVELENGTH (λD): YELLOW 588 nm TYP. @ VF=5V
FORWARD CURRENT (IF): YELLOW 13 mA TYP. @ VF=5V

6 INDICATED MAGNETIC CONNECTIONS ARE SYMMETRICAL TO SUPPORT AUTO-MDI/MDIX.

7 TRP CONNECTOR LOGO, PART NUMBER, DATE CODE, COUNTRY OF ORIGIN AND AGENCY APPROVAL MARKING IN APPROXIMATE LOCATION SHOWN.

8 THESE PARTS ARE RECOMMENDED FOR WAVE SOLDERING PROCESS, PEAK WAVE SOLDERING TEMPERATURE IS 265°C MAX,10 SECONDS MAX.

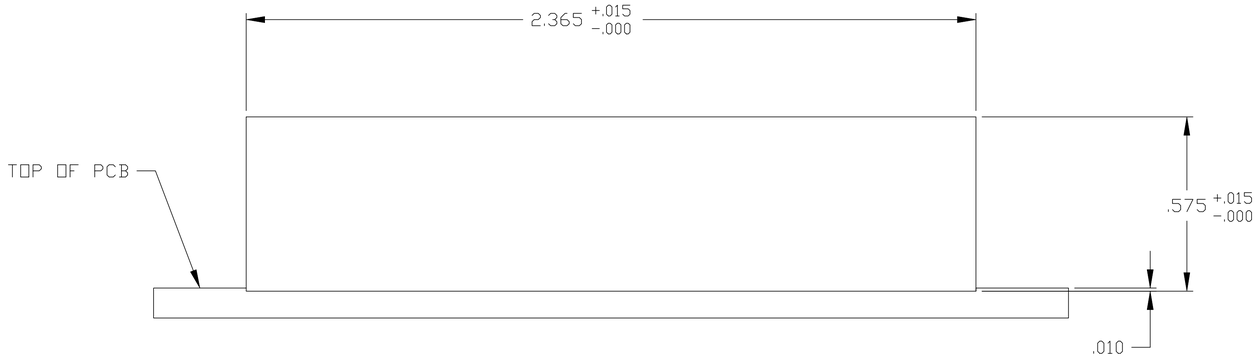

1X4 SUGGESTED PANEL CUTOUT

DIM "A"	LED1 5	250 OHMS RESISTOR 5	LED2 5	250 OHMS RESISTOR 5	PART NUMBER
.160±.010	GREEN	NO	YELLOW	NO	1840513-8
.160±.010	GREEN	NO	GREEN	NO	1840513-7
.160±.010	YELLOW	YES	GREEN	YES	1840513-2

THIS DRAWING IS A CONTROLLED DOCUMENT.

DIMENSIONS: INCHES

TOLERANCES UNLESS OTHERWISE SPECIFIED:
0 PLC ± –
1 PLC ± –
2 PLC ± .010
3 PLC ± .005
4 PLC ± –
ANGLES ± –

PRODUCT SPEC: 108-2100
APPLICATION SPEC: –

DWN GOLD ZHU 20FEB2006
CHK MICHAEL ZHANG 20FEB2006
APVD TEDDY XIONG 20FEB2006

trp CONNECTOR a bel group — DONGGUAN CHINA

MODEL NAME: MAGJACK GANG NON-POE

DESC: 1X4 7G05 GIGABIT TAB UP W/ LED

SIZE A1 | CAGE CODE | DRAWING NO C-1840513 | RESTRICTED TO –

CUSTOMER DRAWING | SCALE NTS | SHEET 1 OF 2 | REV G

TRP Connector

Downloaded from Arrow.com.

7G05 SERIES GIGABIT CIRCUIT

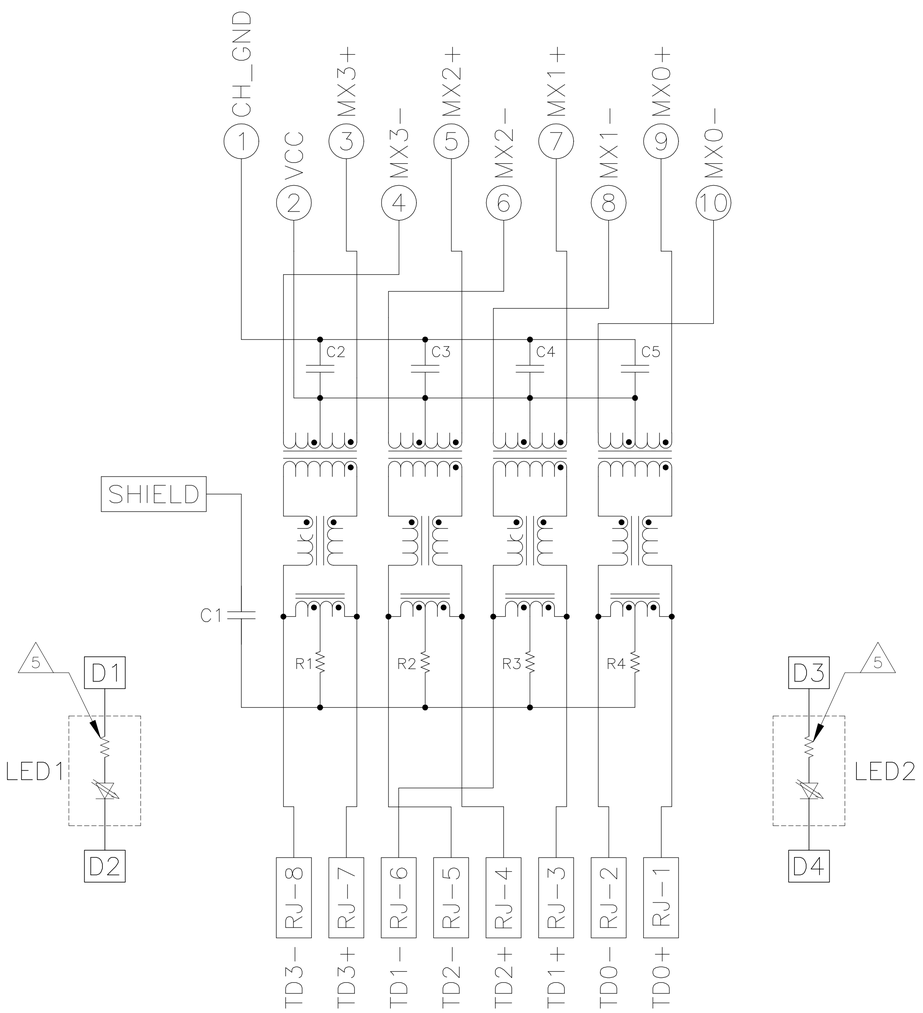

C1 = 1000 pF, 2kV DECOUPLING CAPACITOR
R1-R4 = 75 OHMS, 1/16W, 5% RESISTORS
C2-C5 = 0.1µF, 10%, 50V, X7R CAPACITORS

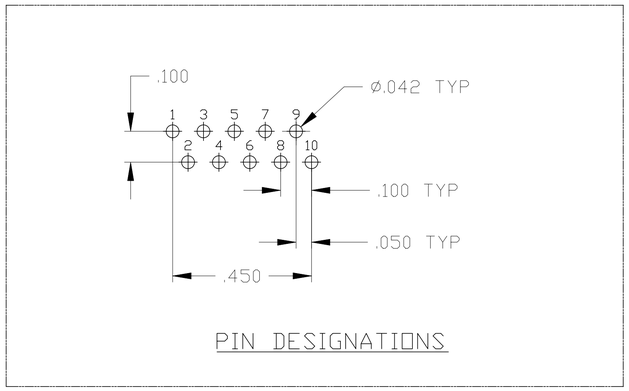

PIN DESIGNATIONS

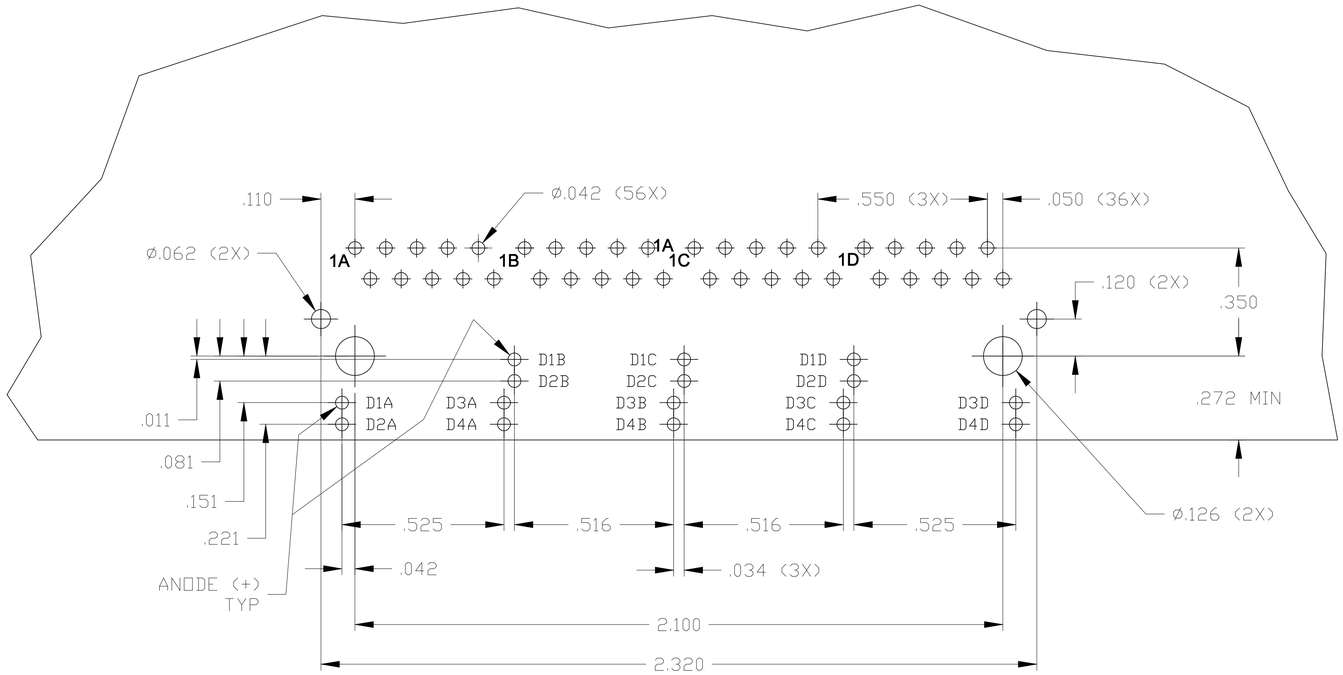

SUGGESTED PCB LAYOUT
(Component Side)

THIS DRAWING IS A CONTROLLED DOCUMENT.	DWN GOLD ZHU 20FEB2006	trp CONNECTOR a bel group	DONGGUAN CHINA
DIMENSIONS: INCHES	CHK MICHAEL ZHANG 20FEB2006		
TOLERANCES UNLESS OTHERWISE SPECIFIED: 0 PLC ± – 1 PLC ± – 2 PLC ± .010 3 PLC ± .005 4 PLC ± – ANGLES ± –	APVD TEDDY XIONG 20FEB2006	DESC 1X4 7G05 GIGABIT TAB UP W/ LED	
PRODUCT SPEC 108–2100	MODEL NAME MAGJACK GANG NON–POE	SIZE A1 / CAGE CODE / DRAWING NO C–1840513	RESTRICTED TO –
APPLICATION SPEC –	CUSTOMER DRAWING	SCALE NTS / SHEET 2 OF 2	REV G

TRP Connector

Downloaded from Arrow.com.