# Piezo Alarm

Product No. 111700

HU100P12VIP67B-01 LF

Issue No. BS/TEA01.255

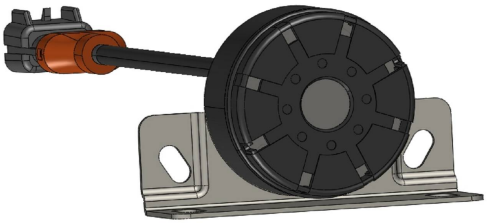

**Features:**

- Loud sound output
- RoHS

BESTAR Holdings Co., Ltd.

www.be-star.com | info@be-star.com



Downloaded from Arrow.com.

Content:

1 Characteristic .....3~4
1.1 Electrical and Mechanical Characteristics .....3
1.2 Test method .....4
2 Assembly drawing .....5
3 Dimension .....6
4 Reliability Test .....7
5 Packing .....8
6 History change record .....9
7 Important Notice .....10

REFERENCE BESTAR REFERENCE BESTAR BESTAR REFERENCE



Downloaded from Arrow.com.

# 1. Characteristic

## 1.1 Electrical and Mechanical Characteristics

| | |
|---|---|
| 1. Rated Voltage | 12VDC |
| 2. Operating Voltage | 9~18VDC |
| 3. Current Consumption | Max.300mA |
| 4. Average Power | 1.8W |
| 5. Sound Pressure Level at 1m/12VDC | min.102dB |
| 6. Resonant Frequency | 2500~2800Hz |
| 7. Tone | Pulse tone |
| 8. ON/OFF cycles C/M cycles per minute | 80±10C/M |
| 9. Operating Temperature | -30°C~+70°C |
| 10. Housing | Color：Black ABS plastic resin |
| 11. Bracket | Metal |

BESTAR REFERENCE



Downloaded from Arrow.com.

## 1.2 Test method:

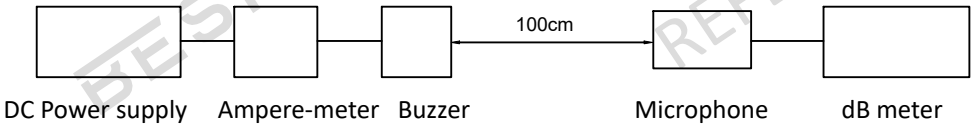


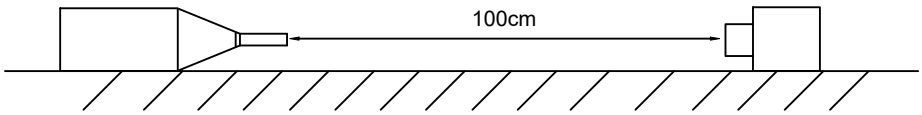


Wooden table

BESTAR REFERENCE REFERENCE BESTAR BESTAR REFERENCE



Downloaded from Arrow.com.

## 2.Assembly drawing

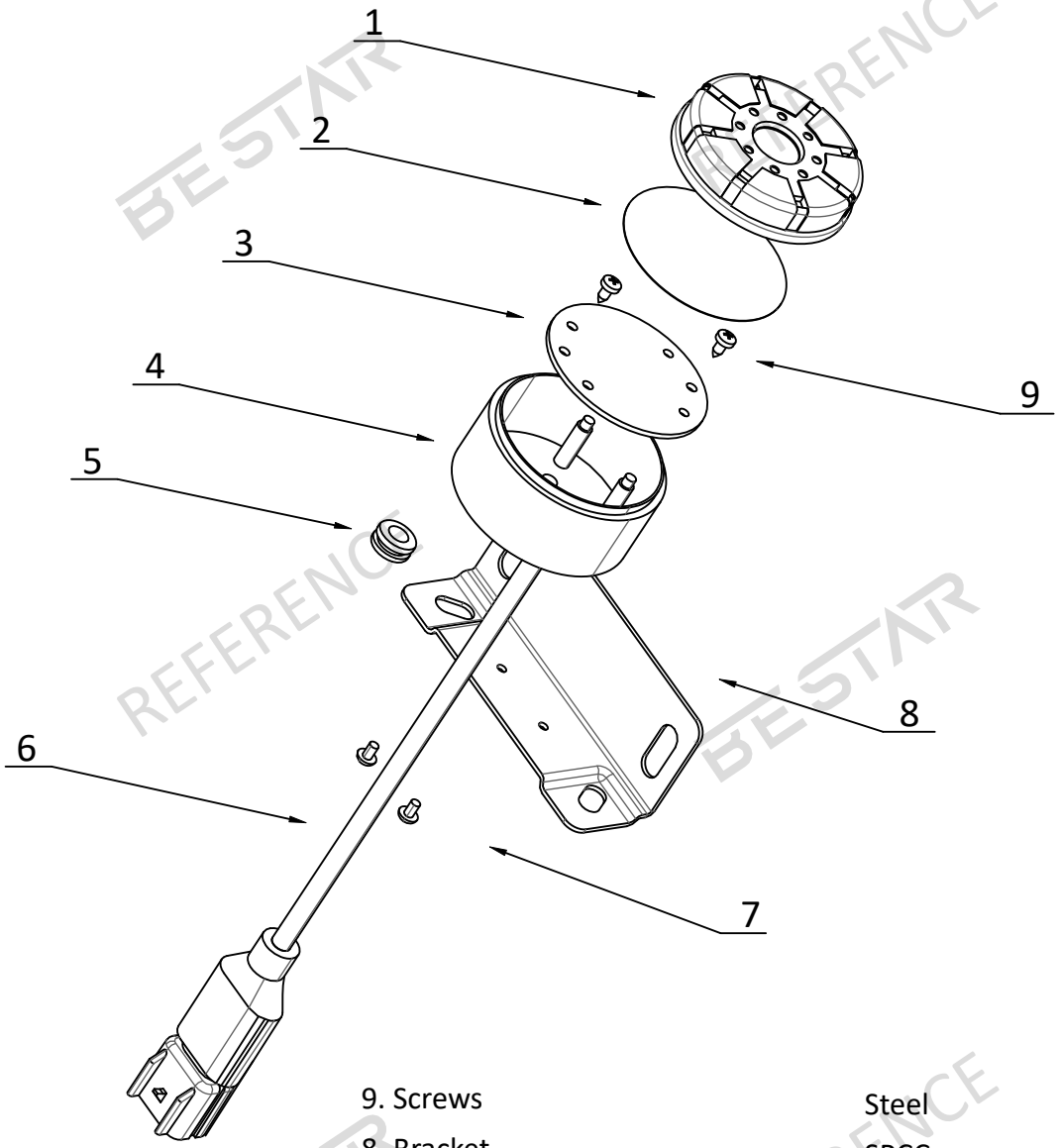


| | |
|---|---|
| 9. Screws | Steel |
| 8. Bracket | SPCC |
| 7. Screw | Steel |
| 6. Wire | PVC+Cu |
| 5. Rubber plug | Rubber |
| 4. Housing | ABS |
| 3. PCBA | FR-4 |
| 2. Piezo piece | Steel |
| 1. Upper housing | ABS |



Downloaded from Arrow.com.

## 3.Dimension

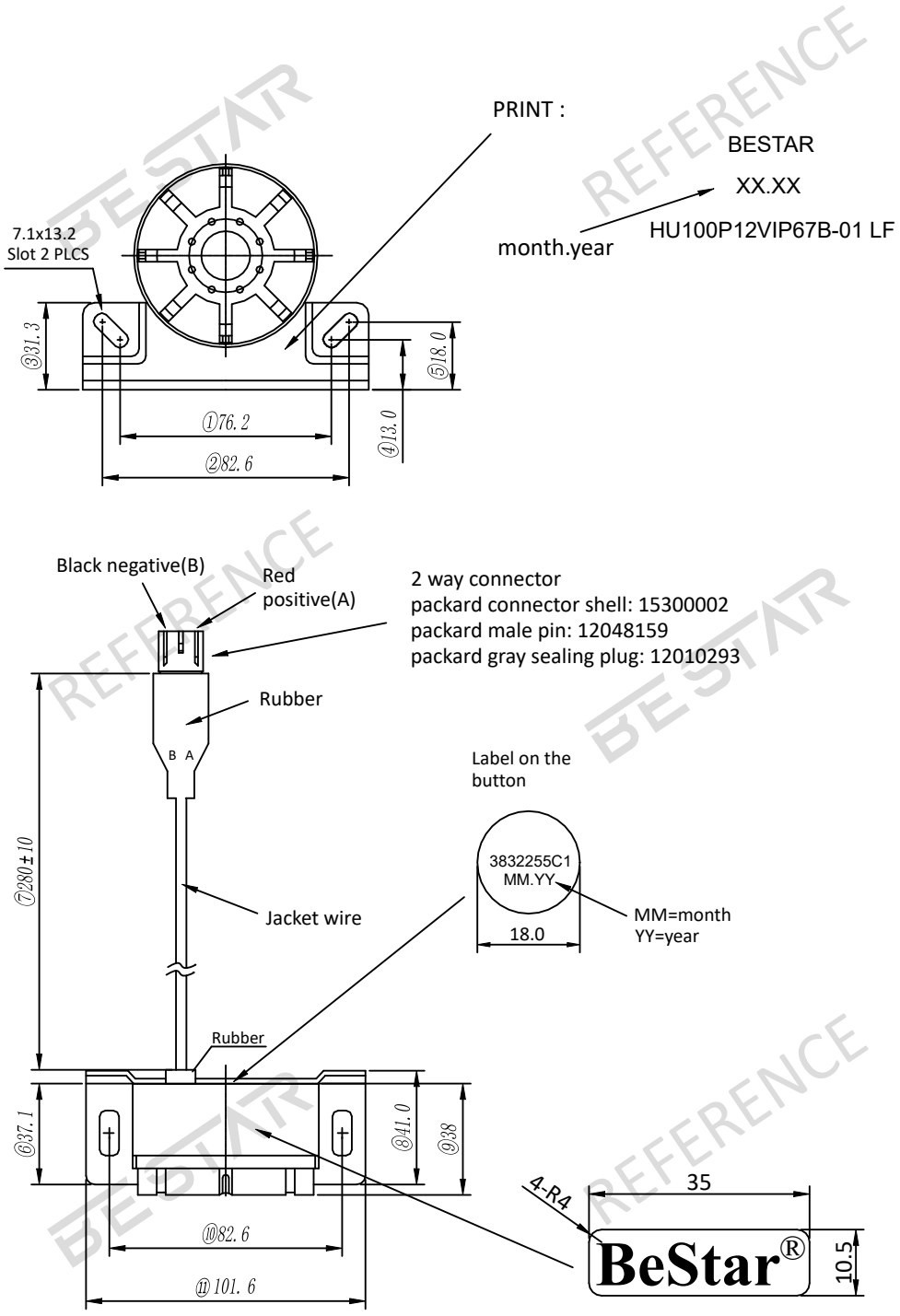


Other dimemsion tolerance: ±0.5mm



Downloaded from Arrow.com.

## 4. Reliability test

| | |
|---|---|
| 4.1 Low temperature test | |
| Temperature | -30°C |
| Duration | 98hrs |
| 4.2 High temperature test | |
| Temperature | +70°C |
| Duration | 98hrs |
| 4.3 Humidity test | |
| Temperature | +40°C |
| Humidity | 95%RH |
| Duration | 98hrs |
| 4.4 Durability test | |
| Duration | Testing after 1000hours actual continuous operation |
| 4.5 Shock withstanding | |
| High | 75cm to ground |
| 4.6 Vibration test | |
| Cycles | 2000 cycles per minute |
| Amplitude | 2mm |
| Directions | x,y,z three direction for 30min each |

4.1-4.3 Should be measured after 2hrs exposed in normal temperature, after each of test,no abnormality shall exist.

BESTAR REFERENCE



Downloaded from Arrow.com.

## 5. Packing

Packing Quantity : Total 48pcs per carton

Carton Size: 510x410x330mm

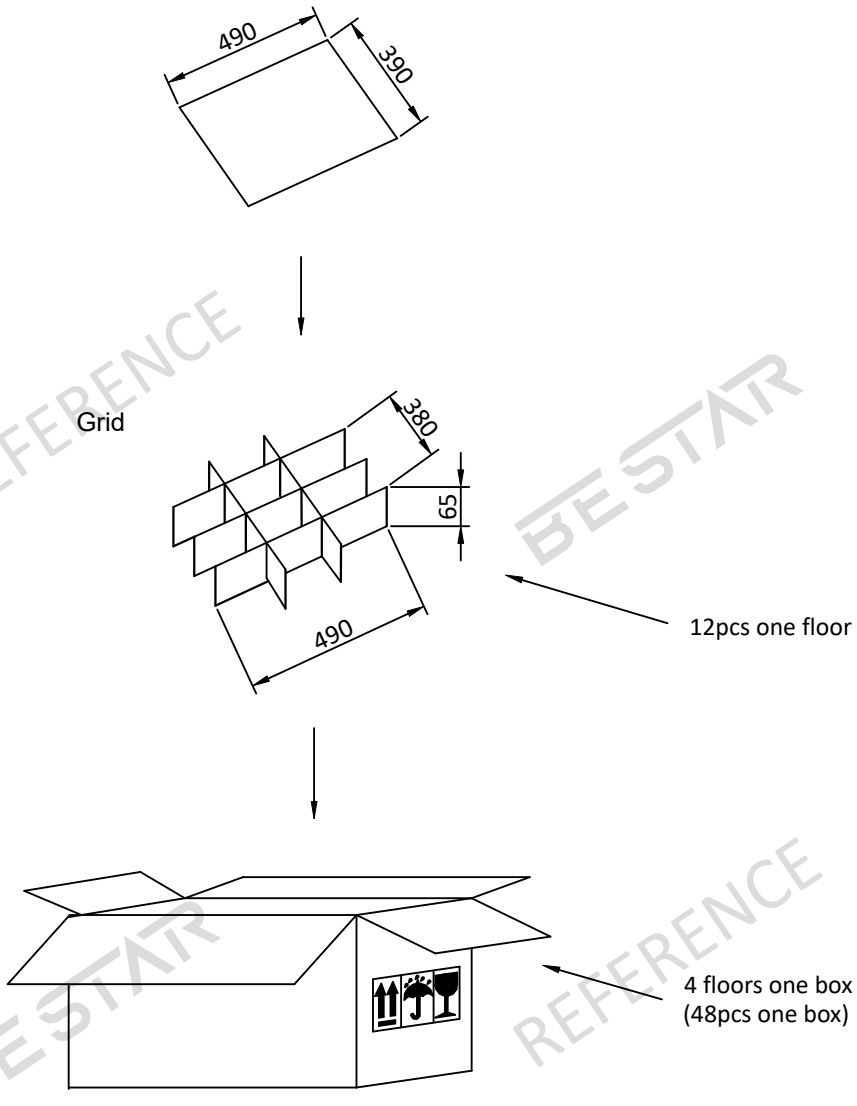


REFERENCE
BESTAR



Downloaded from Arrow.com.

## 6. History change record

| Version | Change Items | Date | Drawn | Checked | Approved |
|---|---|---|---|---|---|
| A | First Edition | 2008.08.01 | Shangjun.Zhang | Mingcai.Liao | Richard.Cheng |
| B | | 2009.01.06 | Mingcai.Liao | Shangjun.Zhang | Richard.Cheng |
| C | Add the packing | 2012.02.22 | Claire.Fu | Xiaodong.Chen | Jinguo.Xu |
| D | Remove the weight of the part | 2016.11.21 | Xiaodong.Chen | Chloe.Gong | Weihua.Zhu |
| D1 | Update the template | 2024.01.19 | Kaylee.Zhuang | Claire.Fu | Travis.Wang |
| D2 | Change the bracket printing (remove"DC 12V") | 2024.03.22 | Kaylee.Zhuang | Claire.Fu | Travis.Wang |
| | | | | | |

REFERENCE
BESTAR
REFERENCE
BESTAR



Downloaded from Arrow.com.

# 7.Important Notice

**7.1 The products mustn't be washed**

**7.2 Store Condition (Packing)**

The products should be stored in the room ,where the temperature/humidity is stable. And avoid such places where there are large temperature changes. Please store the products at the following conditions:

Temperature: -10 to + 40°C Humidity: 15 to 85% R.H.

**7.3 Expire Date on Storage**

Expire date (Shelf life) of the products is six months after deliveried under the conditions of a sealed and an unopened package. Please use the products within six months after deliveried.

If you store the products for a long time (more than six months), use carefully because the products may be degraded in the solderability and/or rusty.Please confirm solderability and characteristics for the products regularly.

**7.4 Notice on Product Storage**

(1) Please do not store the products in a chemical atmosphere (Acids, Alkali, Bases, Organic gas, Sulfides and so on), because the characteristics may be reduced at quality, and/or be degraded in the solderability due to the storage in a chemical atmosphere.

(2) Please use the products immediately after the package is opened, because the characteristics may be reduced at quality, and/or be degraded in the solderability due to storage under the poor condition.

BESTAR REFERENCE



Downloaded from Arrow.com.