Freescale Semiconductor
Data Sheet

Document Number: MSC8251
Rev. 7, 08/2013

MSC8251

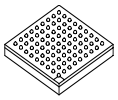

FC-PBGA–783
29 mm × 29 mm

Single-Core Digital Signal Processor

- One StarCore SC3850 DSP subsystems, with an SC3850 DSP core, 32 Kbyte L1 instruction cache, 32 Kbyte L1 data cache, unified 512 Kbyte L2 cache configurable as M2 memory in 64 Kbyte increments, memory management unit (MMU), extended programmable interrupt controller (EPIC), two general-purpose 32-bit timers, debug and profiling support, low-power Wait, Stop, and power-down processing modes, and ECC/EDC support.
- Chip-level arbitration and switching system (CLASS) that provides full fabric non-blocking arbitration between the cores and other initiators and the M2 memory, shared M3 memory, DDR SRAM controllers, device configuration control and status registers, and other targets.
- 1056 Kbyte 128-bit wide M3 memory, 1024 Kbytes of which can be turned off to save power.
- 96 Kbyte boot ROM.
- Three input clocks (one global and two differential).
- Five PLLs (three global and two Serial RapidIO PLLs).
- Two DDR controllers with up to a 400 MHz clock (800 MHz data rate), 64/32 bit data bus, supporting up to a total 2 Gbyte in up to four banks (two per controller) and support for DDR2 and DDR3.
- DMA controller with 32 unidirectional channels supporting 16 memory-to-memory channels with up to 1024 buffer descriptors per channel, and programmable priority, buffer, and multiplexing configuration. It is optimized for DDR SDRAM.
- Up to four independent TDM modules with programmable word size (2, 4, 8, or 16-bit), hardware-base A-law/μ-law conversion, up to 62.5 Mbps data rate for each TDM link, and with glueless interface to E1 or T1 framers that can interface with H-MVIP/H.110 devices, TSI, and codecs such as AC-97.
- High-speed serial interface that supports two Serial RapidIO interfaces, one PCI Express interface, and two SGMII interfaces (multiplexed). The Serial RapidIO interfaces support 1x/4x operation up to 3.125 Gbaud with a single messaging unit and two DMA units. The PCI Express controller supports 32- and 64-bit addressing, x4, x2, and x1 link.
- QUICC Engine technology subsystem with dual RISC processors, 48 Kbyte multi-master RAM, 48 Kbyte instruction RAM, supporting two communication controllers for two Gigabit Ethernet interfaces (RGMII or SGMII), to offload scheduling tasks from the DSP cores, and an SPI.
- I/O Interrupt Concentrator consolidates all chip maskable interrupt and non-maskable interrupt sources and routes then to $\overline{\text{INT_OUT}}$, $\overline{\text{NMI_OUT}}$, and the cores.
- UART that permits full-duplex operation with a bit rate of up to 6.25 Mbps.
- Two general-purpose 32-bit timers for RTOS support per SC3850 core, four timer modules with four 16-bit fully programmable timers, and eight software watchdog timers (SWT).
- Eight programmable hardware semaphores.
- Up to 32 virtual interrupts and a virtual $\overline{\text{NMI}}$ asserted by simple write access.
- I^2C interface.
- Up to 32 GPIO ports, sixteen of which can be configured as external interrupts.
- Boot interface options include Ethernet, Serial RapidIO interface, I^2C, and SPI.
- Supports standard JTAG interface
- Low power CMOS design, with low-power standby and power-down modes, and optimized power-management circuitry.
- 45 nm SOI CMOS technology.

© 2010–2013 Freescale Semiconductor, Inc.

Downloaded from Arrow.com.

Table of Contents

1 Pin Assignment 4
1.1 FC-PBGA Ball Layout Diagram 4
1.2 Signal List By Ball Location 5
2 Electrical Characteristics 23
2.1 Maximum Ratings 23
2.2 Recommended Operating Conditions 24
2.3 Thermal Characteristics 24
2.4 CLKIN Requirements 25
2.5 DC Electrical Characteristics 25
2.6 AC Timing Characteristics 36
3 Hardware Design Considerations 53
3.1 Power Supply Ramp-Up Sequence 53
3.2 PLL Power Supply Design Considerations 56
3.3 Clock and Timing Signal Board Layout Considerations 57
3.4 SGMII AC-Coupled Serial Link Connection Example . . 57
3.5 Connectivity Guidelines 58
3.6 Guide to Selecting Connections for Remote Power Supply Sensing 64
4 Ordering Information 64
5 Package Information 65
6 Product Documentation 66
7 Revision History 66

List of Figures

Figure 1. MSC8251 Block Diagram 3
Figure 2. StarCore SC3850 DSP Subsystem Block Diagram 3
Figure 3. MSC8251 FC-PBGA Package, Top View 4
Figure 4. Differential Voltage Definitions for Transmitter or Receiver 27
Figure 5. Receiver of SerDes Reference Clocks 29
Figure 6. SerDes Transmitter and Receiver Reference Circuits . 30
Figure 7. Differential Reference Clock Input DC Requirements (External DC-Coupled) 30
Figure 8. Differential Reference Clock Input DC Requirements (External AC-Coupled) 31
Figure 9. Single-Ended Reference Clock Input DC Requirements 31
Figure 10. SGMII Transmitter DC Measurement Circuit 34
Figure 11. DDR2 and DDR3 SDRAM Interface Input Timing Diagram 37
Figure 12. MCK to MDQS Timing 38
Figure 13. DDR SDRAM Output Timing 39
Figure 14. DDR2 and DDR3 Controller Bus AC Test Load 39
Figure 15. DDR2 and DDR3 SDRAM Differential Timing Specifications 39
Figure 16. Differential Measurement Points for Rise and Fall Time 41
Figure 17. Single-Ended Measurement Points for Rise and Fall Time Matching 41
Figure 18. Single Frequency Sinusoidal Jitter Limits 43
Figure 19. SGMII AC Test/Measurement Load 44
Figure 20. TDM Receive Signals 45
Figure 21. TDM Transmit Signals 46
Figure 22. TDM AC Test Load 46
Figure 23. Timer AC Test Load 46
Figure 24. MII Management Interface Timing 47
Figure 25. RGMII AC Timing and Multiplexing 48
Figure 26. SPI AC Test Load 49
Figure 27. SPI AC Timing in Slave Mode (External Clock) 49
Figure 28. SPI AC Timing in Master Mode (Internal Clock) 50
Figure 29. Test Clock Input Timing 51
Figure 30. Boundary Scan (JTAG) Timing 52
Figure 31. Test Access Port Timing 52
Figure 32. TRST Timing 52
Figure 33. Supply Ramp-Up Sequence with V_{DD} Ramping Before V_{DDIO} and CLKIN Starting With V_{DDIO} 53
Figure 34. Supply Ramp-Up Sequence 55
Figure 35. Reset Connection in Functional Application 55
Figure 36. Reset Connection in Debugger Application 55
Figure 37. PLL Supplies 56
Figure 38. SerDes PLL Supplies 56
Figure 39. 4-Wire AC-Coupled SGMII Serial Link Connection Example 57
Figure 40. MSC8251 Mechanical Information, 783-ball FC-PBGA Package 65

Downloaded from Arrow.com.

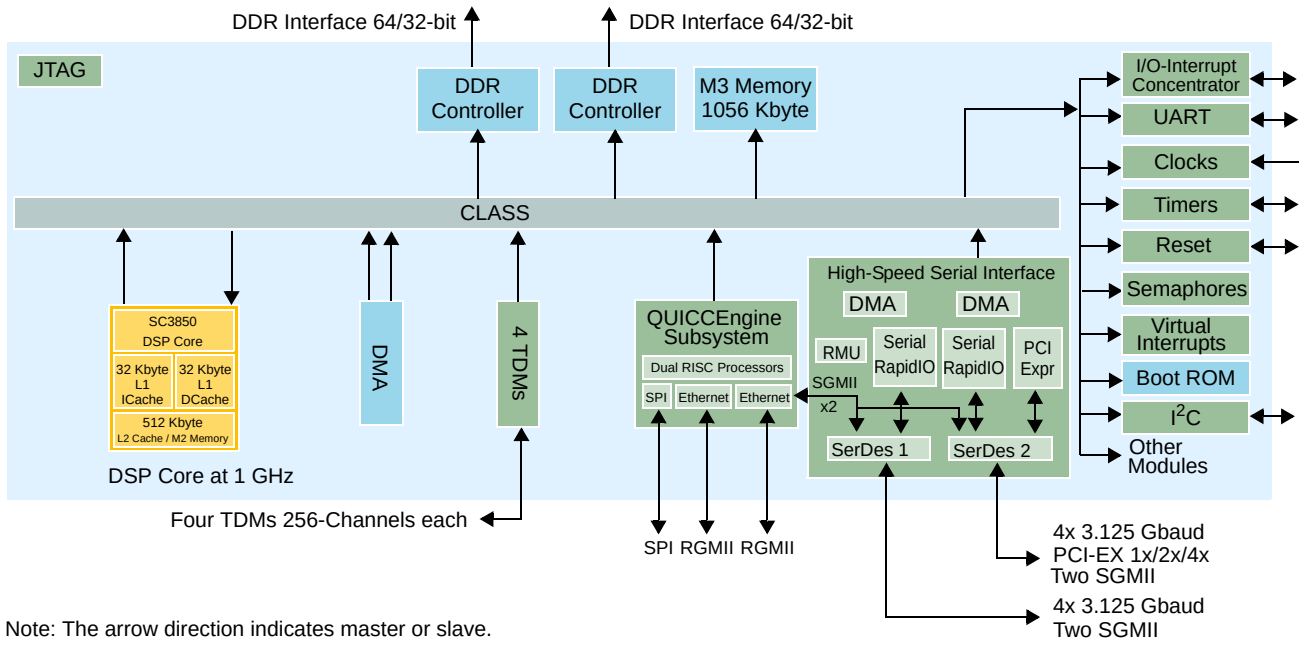

Figure 1. MSC8251 Block Diagram

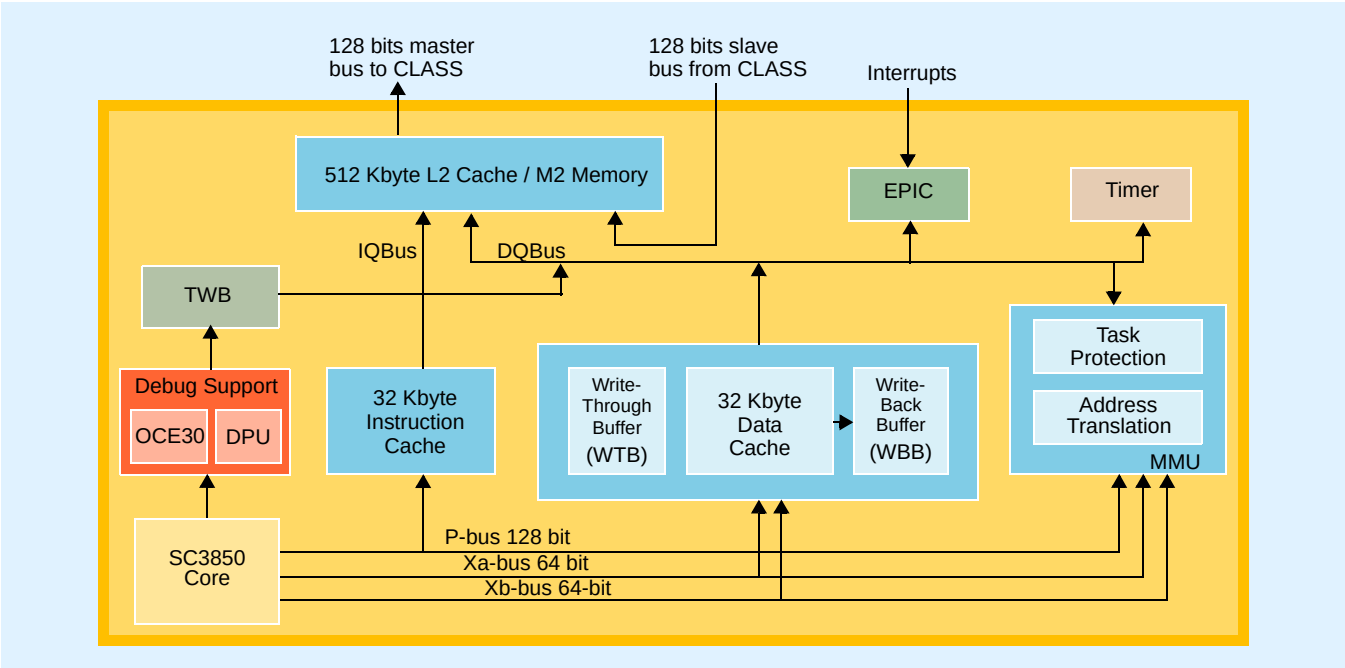

Figure 2. StarCore SC3850 DSP Subsystem Block Diagram

Downloaded from Arrow.com.

1 Pin Assignment

This section includes diagrams of the MSC8251 package ball grid array layouts and tables showing how the pinouts are allocated for the package.

1.1 FC-PBGA Ball Layout Diagram

The top view of the FC-PBGA package is shown in Figure 3 with the ball location index numbers.

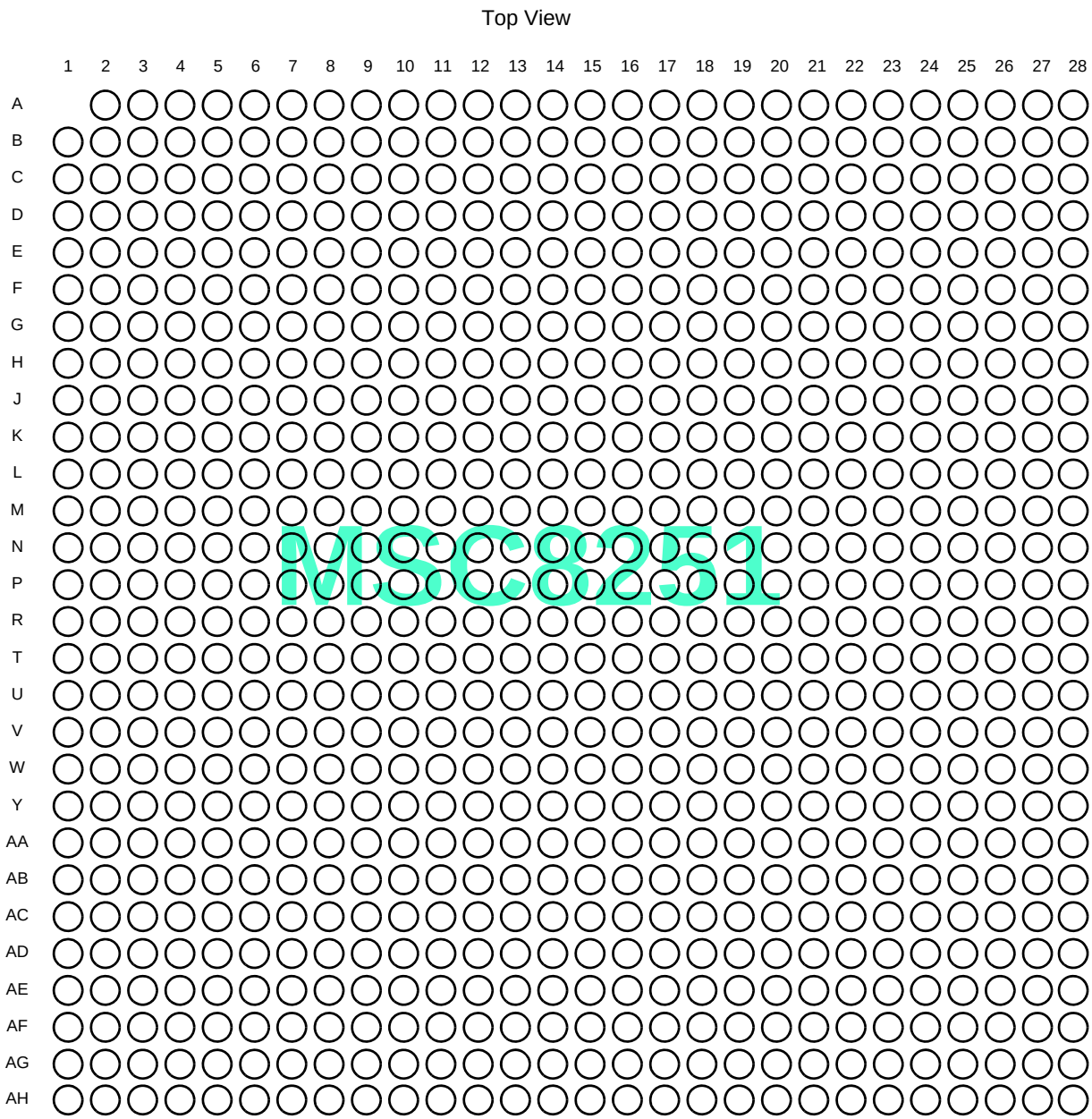

Figure 3. MSC8251 FC-PBGA Package, Top View

Downloaded from Arrow.com.

1.2 Signal List By Ball Location

Table 1 presents the signal list sorted by ball number. When designing a board, make sure that the power rail for each signal is appropriately considered. The specified power rail must be tied to the voltage level specified in this document if any of the related signal functions are used (active)

Note: The information in Table 1 and Table 2 distinguishes among three concepts. First, the power pins are the balls of the device package used to supply specific power levels for different device subsystems (as opposed to signals). Second, the power rails are the electrical lines on the board that transfer power from the voltage regulators to the device. They are indicated here as the reference power rails for signal lines; therefore, the actual power inputs are listed as N/A with regard to the power rails. Third, symbols used in these tables are the names for the voltage levels (absolute, recommended, and so on) and not the power supplies themselves.

Table 1. Signal List by Ball Number

Ball Number	Signal Name[1,2]	Pin Type[10]	Power Rail Name
A2	$\overline{\text{M2DQS3}}$	I/O	GVDD2
A3	M2DQS3	I/O	GVDD2
A4	M2ECC0	I/O	GVDD2
A5	$\overline{\text{M2DQS8}}$	I/O	GVDD2
A6	M2DQS8	I/O	GVDD2
A7	M2A5	O	GVDD2
A8	$\overline{\text{M2CK1}}$	O	GVDD2
A9	M2CK1	O	GVDD2
A10	$\overline{\text{M2CS0}}$	O	GVDD2
A11	M2BA0	O	GVDD2
A12	$\overline{\text{M2CAS}}$	O	GVDD2
A13	M2DQ34	I/O	GVDD2
A14	$\overline{\text{M2DQS4}}$	I/O	GVDD2
A15	M2DQS4	I/O	GVDD2
A16	M2DQ50	I/O	GVDD2
A17	$\overline{\text{M2DQS6}}$	I/O	GVDD2
A18	M2DQS6	I/O	GVDD2
A19	M2DQ48	I/O	GVDD2
A20	M2DQ49	I/O	GVDD2
A21	VSS	Ground	N/A
A22	Reserved	NC	—
A23	SXPVDD1	Power	N/A
A24	SXPVSS1	Ground	N/A
A25	Reserved	NC	—
A26	Reserved	NC	—
A27	SXCVDD1	Power	N/A
A28	SXCVSS1	Ground	N/A
B1	M2DQ24	I/O	GVDD2
B2	GVDD2	Power	N/A
B3	M2DQ25	I/O	GVDD2
B4	VSS	Ground	N/A
B5	GVDD2	Power	N/A
B6	M2ECC1	I/O	GVDD2
B7	VSS	Ground	N/A
B8	GVDD2	Power	N/A

Downloaded from Arrow.com.

Table 1. Signal List by Ball Number (continued)

Ball Number	Signal Name[1,2]	Pin Type[10]	Power Rail Name
B9	M2A13	O	GVDD2
B10	VSS	Ground	N/A
B11	GVDD2	Power	N/A
B12	$\overline{\text{M2CS1}}$	O	GVDD2
B13	VSS	Ground	N/A
B14	GVDD2	Power	N/A
B15	M2DQ35	I/O	GVDD2
B16	VSS	Ground	N/A
B17	GVDD2	Power	N/A
B18	M2DQ51	I/O	GVDD2
B19	VSS	Ground	N/A
B20	GVDD2	Power	N/A
B21	Reserved	NC	—
B22	Reserved	NC	—
B23	SR1_TXD0	O	SXPVDD1
B24	$\overline{\text{SR1_TXD0}}$	O	SXPVDD1
B25	SXCVDD1	Power	N/A
B26	SXCVSS1	Ground	N/A
B27	$\overline{\text{SR1_RXD0}}$	I	SXCVDD1
B28	SR1_RXD0	I	SXCVDD1
C1	M2DQ28	I/O	GVDD2
C2	M2DM3	O	GVDD2
C3	M2DQ26	I/O	GVDD2
C4	M2ECC4	I/O	GVDD2
C5	M2DM8	O	GVDD2
C6	M2ECC2	I/O	GVDD2
C7	M2CKE1	O	GVDD2
C8	M2CK0	O	GVDD2
C9	$\overline{\text{M2CK0}}$	O	GVDD2
C10	M2BA1	O	GVDD2
C11	M2A1	O	GVDD2
C12	$\overline{\text{M2WE}}$	O	GVDD2
C13	M2DQ37	I/O	GVDD2
C14	M2DM4	O	GVDD2
C15	M2DQ36	I/O	GVDD2
C16	M2DQ32	I/O	GVDD2
C17	M2DQ55	I/O	GVDD2
C18	M2DM6	O	GVDD2
C19	M2DQ53	I/O	GVDD2
C20	M2DQ52	I/O	GVDD2
C21	Reserved	NC	—
C22	SR1_IMP_CAL_RX	I	SXCVDD1
C23	SXPVSS1	Ground	N/A
C24	SXPVDD1	Power	N/A
C25	SR1_REF_CLK	I	SXCVDD1
C26	$\overline{\text{SR1_REF_CLK}}$	I	SXCVDD1

Downloaded from Arrow.com.

Table 1. Signal List by Ball Number (continued)

Ball Number	Signal Name[1,2]	Pin Type[10]	Power Rail Name
C27	Reserved	NC	—
C28	Reserved	NC	—
D1	GVDD2	Power	N/A
D2	VSS	Ground	N/A
D3	M2DQ29	I/O	GVDD2
D4	GVDD2	Power	N/A
D5	VSS	Ground	N/A
D6	M2ECC5	I/O	GVDD2
D7	GVDD2	Power	N/A
D8	VSS	Ground	N/A
D9	M2A8	O	GVDD2
D10	GVDD2	Power	N/A
D11	VSS	Ground	N/A
D12	M2A0	O	GVDD2
D13	GVDD2	Power	N/A
D14	VSS	Ground	N/A
D15	M2DQ39	I/O	GVDD2
D16	GVDD2	Power	N/A
D17	VSS	Ground	N/A
D18	M2DQ54	I/O	GVDD2
D19	GVDD2	Power	N/A
D20	VSS	Ground	N/A
D21	SXPVSS1	Ground	N/A
D22	SXPVDD1	Power	N/A
D23	SR1_TXD1	O	SXPVDD1
D24	$\overline{\text{SR1_TXD1}}$	O	SXPVDD1
D25	SXCVSS1	Ground	N/A
D26	SXCVDD1	Power	N/A
D27	$\overline{\text{SR1_RXD1}}$	I	SXCVDD1
D28	SR1_RXD1	I	SXCVDD1
E1	M2DQ31	I/O	GVDD2
E2	M2DQ30	I/O	GVDD2
E3	M2DQ27	I/O	GVDD2
E4	M2ECC7	I/O	GVDD2
E5	M2ECC6	I/O	GVDD2
E6	M2ECC3	I/O	GVDD2
E7	M2A9	O	GVDD2
E8	M2A6	O	GVDD2
E9	M2A3	O	GVDD2
E10	M2A10	O	GVDD2
E11	$\overline{\text{M2RAS}}$	O	GVDD2
E12	M2A2	O	GVDD2
E13	M2DQ38	I/O	GVDD2
E14	$\overline{\text{M2DQS5}}$	I/O	GVDD2
E15	M2DQS5	I/O	GVDD2
E16	M2DQ33	I/O	GVDD2

Downloaded from Arrow.com.

Table 1. Signal List by Ball Number (continued)

Ball Number	Signal Name[1,2]	Pin Type[10]	Power Rail Name
E17	M2DQ56	I/O	GVDD2
E18	M2DQ57	I/O	GVDD2
E19	$\overline{\text{M2DQS7}}$	I/O	GVDD2
E20	Reserved	NC	—
E21	Reserved	NC	—
E22	Reserved	NC	—
E23	SXPVDD1	Power	N/A
E24	SXPVSS1	Ground	N/A
E25	SR1_PLL_AGND[9]	Ground	SXCVSS1
E26	SR1_PLL_AVDD[9]	Power	SXCVDD1
E27	SXCVSS1	Ground	N/A
E28	SXCVDD1	Power	N/A
F1	VSS	Ground	N/A
F2	GVDD2	Power	N/A
F3	M2DQ16	I/O	GVDD2
F4	VSS	Ground	N/A
F5	GVDD2	Power	N/A
F6	M2DQ17	I/O	GVDD2
F7	VSS	Ground	N/A
F8	GVDD2	Power	N/A
F9	M2BA2	O	GVDD2
F10	VSS	Ground	N/A
F11	GVDD2	Power	N/A
F12	M2A4	O	GVDD2
F13	VSS	Ground	N/A
F14	GVDD2	Power	N/A
F15	M2DQ42	I/O	GVDD2
F16	VSS	Ground	N/A
F17	GVDD2	Power	N/A
F18	M2DQ58	I/O	GVDD2
F19	M2DQS7	I/O	GVDD2
F20	GVDD2	Power	N/A
F21	SXPVDD1	Power	N/A
F22	SXPVSS1	Ground	N/A
F23	SR1_TXD2/SG1_TX[4]	O	SXPVDD1
F24	$\overline{\text{SR1_TXD2}}/\overline{\text{SG1_TX}}$[4]	O	SXPVDD1
F25	SXCVDD1	Power	N/A
F26	SXCVSS1	Ground	N/A
F27	$\overline{\text{SR1_RXD2}}/\overline{\text{SG1_RX}}$[4]	I	SXCVDD1
F28	SR1_RXD2/SG1_RX[4]	I	SXCVDD1
G1	$\overline{\text{M2DQS2}}$	I/O	GVDD2
G2	M2DQS2	I/O	GVDD2
G3	M2DQ19	I/O	GVDD2
G4	M2DM2	O	GVDD2
G5	M2DQ21	I/O	GVDD2
G6	M2DQ22	I/O	GVDD2

Downloaded from Arrow.com.

Table 1. Signal List by Ball Number (continued)

Ball Number	Signal Name[1,2]	Pin Type[10]	Power Rail Name
G7	M2CKE0	O	GVDD2
G8	M2A11	O	GVDD2
G9	M2A7	O	GVDD2
G10	$\overline{\text{M2CK2}}$	O	GVDD2
G11	M2APAR_OUT	O	GVDD2
G12	M2ODT1	O	GVDD2
G13	$\overline{\text{M2APAR_IN}}$	I	GVDD2
G14	M2DQ43	I/O	GVDD2
G15	M2DM5	O	GVDD2
G16	M2DQ44	I/O	GVDD2
G17	M2DQ40	I/O	GVDD2
G18	M2DQ59	I/O	GVDD2
G19	M2DM7	O	GVDD2
G20	M2DQ60	I/O	GVDD2
G21	Reserved	NC	—
G22	Reserved	NC	—
G23	SXPVSS1	Ground	N/A
G24	SXPVDD1	Power	N/A
G25	SR1_IMP_CAL_TX	I	SXCVDD1
G26	SXCVSS1	Ground	N/A
G27	Reserved	NC	—
G28	Reserved	NC	—
H1	GVDD2	Power	N/A
H2	VSS	Ground	N/A
H3	M2DQ18	I/O	GVDD2
H4	GVDD2	Power	N/A
H5	VSS	Ground	N/A
H6	M2DQ20	I/O	GVDD2
H7	GVDD2	Power	N/A
H8	VSS	Ground	N/A
H9	M2A15	O	GVDD2
H10	M2CK2	O	GVDD2
H11	M2MDIC0	I/O	GVDD2
H12	M2VREF	I	GVDD2
H13	M2MDIC1	I/O	GVDD2
H14	M2DQ46	I/O	GVDD2
H15	M2DQ47	I/O	GVDD2
H16	M2DQ45	I/O	GVDD2
H17	M2DQ41	I/O	GVDD2
H18	M2DQ62	I/O	GVDD2
H19	M2DQ63	I/O	GVDD2
H20	M2DQ61	I/O	GVDD2
H21	Reserved	NC	—
H22	Reserved	NC	—
H23	SR1_TXD3/SG2_TX[4]	O	SXPVDD1
H24	$\overline{\text{SR1_TXD3}}$/SG2_TX[4]	O	SXPVDD1

Downloaded from Arrow.com.

Table 1. Signal List by Ball Number (continued)

Ball Number	Signal Name[1,2]	Pin Type[10]	Power Rail Name
H25	SXCVSS1	Ground	N/A
H26	SXCVDD1	Power	N/A
H27	$\overline{\text{SR1_RXD3}}$/$\overline{\text{SG2_RX}}$[4]	I	SXCVDD1
H28	SR1_RXD3/SG2_RX[4]	I	SXCVDD1
J1	M2DQS1	I/O	GVDD2
J2	$\overline{\text{M2DQS1}}$	I/O	GVDD2
J3	M2DQ10	I/O	GVDD2
J4	M2DQ11	I/O	GVDD2
J5	M2DQ14	I/O	GVDD2
J6	M2DQ23	I/O	GVDD2
J7	M2ODT0	O	GVDD2
J8	M2A12	O	GVDD2
J9	M2A14	O	GVDD2
J10	VSS	Ground	N/A
J11	GVDD2	Power	N/A
J12	VSS	Ground	N/A
J13	GVDD2	Power	N/A
J14	VSS	Ground	N/A
J15	GVDD2	Power	N/A
J16	VSS	Ground	N/A
J17	GVDD2	Power	N/A
J18	VSS	Ground	N/A
J19	GVDD2	Power	N/A
J20	Reserved	NC	—
J21	Reserved	NC	—
J22	Reserved	NC	—
J23	SXPVDD1	Power	N/A
J24	SXPVSS1	Ground	N/A
J25	SXCVDD1	Power	N/A
J26	SXCVSS1	Ground	N/A
J27	SXCVDD1	Power	N/A
J28	SXCVSS1	Ground	N/A
K1	VSS	Ground	N/A
K2	GVDD2	Power	N/A
K3	M2DM1	O	GVDD2
K4	VSS	Ground	N/A
K5	GVDD2	Power	N/A
K6	M2DQ0	I/O	GVDD2
K7	VSS	Ground	N/A
K8	GVDD2	Power	N/A
K9	M2DQ5	I/O	GVDD2
K10	VSS	Ground	N/A
K11	VDD	Power	N/A
K12	VSS	Ground	N/A
K13	VDD	Power	N/A
K14	VSS	Ground	N/A

Downloaded from Arrow.com.

Table 1. Signal List by Ball Number (continued)

Ball Number	Signal Name[1,2]	Pin Type[10]	Power Rail Name
K15	VDD	Power	N/A
K16	VSS	Ground	N/A
K17	VSS	Ground	N/A
K18	VSS	Ground	N/A
K19	VDD	Power	N/A
K20	Reserved	NC	—
K21	Reserved	NC	—
K22	Reserved	NC	—
K23	SXPVDD2	Power	N/A
K24	SXPVSS2	Ground	N/A
K25	SXCVDD2	Power	N/A
K26	SXCVSS2	Ground	N/A
K27	SXCVDD2	Power	N/A
K28	SXCVSS2	Ground	N/A
L1	M2DQ9	I/O	GVDD2
L2	M2DQ12	I/O	GVDD2
L3	M2DQ13	I/O	GVDD2
L4	$\overline{\text{M2DQS0}}$	I/O	GVDD2
L5	M2DQS0	I/O	GVDD2
L6	M2DM0	O	GVDD2
L7	M2DQ3	I/O	GVDD2
L8	M2DQ2	I/O	GVDD2
L9	M2DQ4	I/O	GVDD2
L10	VDD	Power	N/A
L11	VSS	Ground	N/A
L12	M3VDD	Power	N/A
L13	VSS	Ground	N/A
L14	VSS	Ground	N/A
L15	VSS	Ground	N/A
L16	VSS	Ground	N/A
L17	VSS	Ground	N/A
L18	VDD	Power	N/A
L19	VSS	Ground	N/A
L20	Reserved	NC	—
L21	Reserved	NC	—
L22	Reserved	NC	—
L23	SR2_TXD3/PE_TXD3/SG2_TX[4]	O	SXPVDD2
L24	$\overline{\text{SR2_TXD3}}/\overline{\text{PE_TXD3}}/\overline{\text{SG2_TX}}$[4]	O	SXPVDD2
L25	SXCVSS2	Ground	N/A
L26	SXCVDD2	Power	N/A
L27	$\overline{\text{SR2_RXD3}}/\overline{\text{PE_RXD3}}/\overline{\text{SG2_RX}}$[4]	I	SXCVDD2
L28	SR2_RXD3/PE_RXD3/SG2_RX[4]	I	SXCVDD2
M1	M2DQ8	I/O	GVDD2
M2	VSS	Ground	N/A
M3	GVDD2	Power	N/A
M4	M2DQ15	I/O	GVDD2

Downloaded from Arrow.com.

Table 1. Signal List by Ball Number (continued)

Ball Number	Signal Name[1,2]	Pin Type[10]	Power Rail Name
M5	M2DQ1	I/O	GVDD2
M6	VSS	Ground	N/.A
M7	GVDD2	Power	N/A
M8	M2DQ7	I/O	GVDD2
M9	M2DQ6	I/O	GVDD2
M10	VSS	Ground	N/A
M11	VDD	Power	N/A
M12	VSS	Ground	N/A
M13	VDD	Power	N/A
M14	VSS	Ground	N/A
M15	VSS	Ground	N/A
M16	VSS	Ground	N/A
M17	VSS	Ground	N/A
M18	VSS	Ground	N/A
M19	VDD	Power	N/A
M20	Reserved	NC	—
M21	Reserved	NC	—
M22	Reserved	NC	—
M23	SXPVSS2	Ground	N/A
M24	SXPVDD2	Power	N/A
M25	SR2_IMP_CAL_TX	I	SXCVDD2
M26	SXCVSS2	Ground	N/A
M27	Reserved	NC	—
M28	Reserved	NC	—
N1	VSS	Ground	N/A
N2	$\overline{\text{TRST}}$[7]	I	QVDD
N3	$\overline{\text{PORESET}}$[7]	I	QVDD
N4	VSS	Ground	N/A
N5	TMS[7]	I	QVDD
N6	CLKOUT	O	QVDD
N7	VSS	Ground	N/A
N8	VSS	Ground	N/A
N9	VSS	Ground	N/A
N10	VDD	Power	N/A
N11	VSS	Ground	N/A
N12	M3VDD	Power	N/A
N13	VSS	Ground	N/A
N14	VSS	Ground	N/A
N15	VSS	Ground	N/A
N16	VDD	Power	N/A
N17	VSS	Ground	N/A
N18	VDD	Power	N/A
N19	VSS	Ground	N/A
N20	Reserved	NC	—
N21	SXPVDD2	Power	N/A
N22	SXPVSS2	Ground	N/A

Downloaded from Arrow.com.

Table 1. Signal List by Ball Number (continued)

Ball Number	Signal Name[1,2]	Pin Type[10]	Power Rail Name
N23	SR2_TXD2/PE_TXD2/SG1_TX[4]	O	SXPVDD2
N24	$\overline{\text{SR2_TXD2}}$/$\overline{\text{PE_TXD2}}$/$\overline{\text{SG1_TX}}$[4]	O	SXPVDD2
N25	SXCVDD2	Power	N/A
N26	SXCVSS2	Ground	N/A
N27	$\overline{\text{SR2_RXD2}}$/$\overline{\text{PE_RXD2}}$/$\overline{\text{SG1_RX}}$[4]	I	SXCVDD2
N28	SR2_RXD2/PE_RXD2/SG1_RX[4]	I	SXCVDD2
P1	CLKIN	I	QVDD
P2	EE0	I	QVDD
P3	QVDD	Power	N/A
P4	VSS	Ground	N/A
P5	STOP_BS	I	QVDD
P6	QVDD	Power	N/A
P7	VSS	Ground	N/A
P8	PLL0_AVDD[9]	Power	VDD
P9	PLL2_AVDD[9]	Power	VDD
P10	VSS	Ground	N/A
P11	VDD	Power	N/A
P12	VSS	Ground	N/A
P13	VDD	Power	N/A
P14	VSS	Ground	N/A
P15	VSS	Ground	N/A
P16	VSS	Ground	N/A
P17	VSS	Ground	N/A
P18	VSS	Ground	N/A
P19	VDD	Power	N/A
P20	Reserved	NC	—
P21	Reserved	NC	—
P22	Reserved	NC	—
P23	SXPVDD2	Power	N/A
P24	SXPVSS2	Ground	N/A
P25	SR2_PLL_AGND[9]	Ground	SXCVSS2
P26	SR2_PLL_AVDD[9]	Power	SXCVDD2
P27	SXCVSS2	Ground	N/A
P28	SXCVDD2	Power	N/A
R1	VSS	Ground	N/A
R2	$\overline{\text{NMI}}$	I	QVDD
R3	$\overline{\text{NMI_OUT}}$[6]	O	QVDD
R4	$\overline{\text{HRESET}}$[6,7]	I/O	QVDD
R5	$\overline{\text{INT_OUT}}$[6]	O	QVDD
R6	EE1	O	QVDD
R7	VSS	Ground	N/A
R8	PLL1_AVDD[9]	Power	VDD
R9	VSS	Ground	N/A
R10	VDD	Power	N/A
R11	VSS	Non-user	N/A
R12	VDD	Power	N/A

Downloaded from Arrow.com.

Table 1. Signal List by Ball Number (continued)

Ball Number	Signal Name[1,2]	Pin Type[10]	Power Rail Name
R13	VSS	Ground	N/A
R14	VDD	Power	N/A
R15	VSS	Ground	N/A
R16	VSS	Ground	N/A
R17	VSS	Ground	N/A
R18	VDD	Power	N/A
R19	VSS	Ground	N/A
R20	VSS	Non-user	N/A
R21	SXPVSS2	Ground	N/A
R22	SXPVDD2	Power	N/A
R23	SR2_TXD1/PE_TXD1[4]	O	SXPVDD2
R24	$\overline{\text{SR2_TXD1}}/\overline{\text{PE_TXD1}}$[4]	O	SXPVDD2
R25	SXCVSS2	Ground	N/A
R26	SXCVDD2	Power	N/A
R27	$\overline{\text{SR2_RXD1}}/\overline{\text{PE_RXD1}}$[4]	I	SXCVDD2
R28	SR2_RXD1/PE_RXD1[4]	I	SXCVDD2
T1	VSS	Ground	N/A
T2	TCK	I	QVDD
T3	$\overline{\text{SRESET}}$[6,7]	I/O	QVDD
T4	TDI	I	QVDD
T5	VSS	Ground	N/A
T6	TDO	O	QVDD
T7	VSS	Ground	N/A
T8	VSS	Ground	N/A
T9	QVDD	Power	N/A
T10	VSS	Ground	N/A
T11	VDD	Power	N/A
T12	VSS	Ground	N/A
T13	M3VDD	Power	N/A
T14	VSS	Ground	N/A
T15	VDD	Power	N/A
T16	VSS	Ground	N/A
T17	VSS	Ground	N/A
T18	VSS	Ground	N/A
T19	VDD	Power	N/A
T20	VSS	Ground	N/A
T21	VSS	Non-user	N/A
T22	SR2_IMP_CAL_RX	I	SXCVDD2
T23	SXPVSS2	Ground	N/A
T24	SXPVDD2	Power	N/A
T25	SR2_REF_CLK	I	SXCVDD2
T26	$\overline{\text{SR2_REF_CLK}}$	I	SXCVDD2
T27	Reserved	NC	—
T28	Reserved	NC	—
U1	M1DQ8	I/O	GVDD1
U2	VSS	Ground	N/A

Downloaded from Arrow.com.

Table 1. Signal List by Ball Number (continued)

Ball Number	Signal Name[1,2]	Pin Type[10]	Power Rail Name
U3	GVDD1	Power	N/A
U4	M1DQ15	I/O	GVDD1
U5	M1DQ1	I/O	GVDD1
U6	VSS	Ground	N/A
U7	GVDD1	Power	N/A
U8	M1DQ7	I/O	GVDD1
U9	M1DQ6	I/O	GVDD1
U10	VDD	Power	N/A
U11	VSS	Ground	N/A
U12	M3VDD	Power	N/A
U13	VSS	Ground	N/A
U14	VDD	Power	N/A
U15	VSS	Ground	N/A
U16	VDD	Power	N/A
U17	VSS	Ground	N/A
U18	VDD	Power	N/A
U19	VSS	Ground	N/A
U20	VSS	Ground	N/A
U21	VSS	Ground	N/A
U22	VSS	Non-user	N/A
U23	SR2_TXD0/PE_TXD0[4]	O	SXPVDD2
U24	$\overline{\text{SR2_TXD0}}/\overline{\text{PE_TXD0}}$[4]	O	SXPVDD2
U25	SXCVDD2	Power	N/A
U26	SXCVSS2	Ground	N/A
U27	$\overline{\text{SR2_RXD0}}/\overline{\text{PE_RXD0}}$[4]	I	SXCVDD2
U28	SR2_RXD0/PE_RXD0[4]	I	SXCVDD2
V1	M1DQ9	I/O	GVDD1
V2	M1DQ12	I/O	GVDD1
V3	M1DQ13	I/O	GVDD1
V4	$\overline{\text{M1DQS0}}$	I/O	GVDD1
V5	M1DQS0	I/O	GVDD1
V6	M1DM0	O	GVDD1
V7	M1DQ3	I/O	GVDD1
V8	M1DQ2	I/O	GVDD1
V9	M1DQ4	I/O	GVDD1
V10	VSS	Ground	N/A
V11	VDD	Power	N/A
V12	VSS	Ground	N/A
V13	VDD	Power	N/A
V14	VSS	Ground	N/A
V15	VDD	Power	N/A
V16	VSS	Ground	N/A
V17	VDD	Power	N/A
V18	VSS	Ground	N/A
V19	VDD	Power	N/A
V20	NVDD	Power	N/A

Downloaded from Arrow.com.

Table 1. Signal List by Ball Number (continued)

Ball Number	Signal Name[1,2]	Pin Type[10]	Power Rail Name
V21	$\overline{\text{RCW_LSEL_3}}$/RC20	I/O	NVDD
V22	$\overline{\text{RCW_LSEL_2}}$/RC19	I/O	NVDD
V23	SXPVDD2	Power	N/A
V24	SXPVSS2	Ground	N/A
V25	$\overline{\text{RCW_LSEL_1}}$/RC18	I/O	NVDD
V26	RC21	I	NVDD
V27	SXCVDD2	Power	N/A
V28	SXCVSS2	Ground	N/A
W1	VSS	Ground	N/A
W2	GVDD1	Power	N/A
W3	M1DM1	O	GVDD1
W4	VSS	Ground	N/A
W5	GVDD1	Power	N/A
W6	M1DQ0	I/O	GVDD1
W7	VSS	Ground	N/A
W8	GVDD1	Power	N/A
W9	M1DQ5	I/O	GVDD1
W10	VDD	Power	N/A
W11	VSS	Ground	N/A
W12	VDD	Power	N/A
W13	VSS	Ground	N/A
W14	VDD	Power	N/A
W15	VSS	Ground	N/A
W16	VDD	Power	N/A
W17	VSS	Ground	N/A
W18	VDD	Power	N/A
W19	VSS	Ground	N/A
W20	VSS	Ground	N/A
W21	$\overline{\text{RCW_LSEL0}}$/RC17	I/O	NVDD
W22	GPIO19/SPI_MISO[5,8]	I/O	NVDD
W23	VSS	Ground	N/A
W24	NVDD	Power	N/A
W25	GPIO11/$\overline{\text{IRQ11}}$/RC11[5,8]	I/O	NVDD
W26	GPIO3/DRQ1/$\overline{\text{IRQ3}}$/RC3[5,8]	I/O	NVDD
W27	GPIO7/$\overline{\text{IRQ7}}$/RC7[5,8]	I/O	NVDD
W28	GPIO2/$\overline{\text{IRQ2}}$/RC2[5,8]	I/O	NVDD
Y1	M1DQS1	I/O	GVDD1
Y2	$\overline{\text{M1DQS1}}$	I/O	GVDD1
Y3	M1DQ10	I/O	GVDD1
Y4	M1DQ11	I/O	GVDD1
Y5	M1DQ14	I/O	GVDD1
Y6	M1DQ23	I/O	GVDD1
Y7	M1ODT0	O	GVDD1
Y8	M1A12	O	GVDD1
Y9	M1A14	O	GVDD1
Y10	VSS	Ground	N/A

Downloaded from Arrow.com.

Table 1. Signal List by Ball Number (continued)

Ball Number	Signal Name[1,2]	Pin Type[10]	Power Rail Name
Y11	GVDD1	Power	N/A
Y12	VSS	Ground	N/A
Y13	GVDD1	Power	N/A
Y14	VSS	Ground	N/A
Y15	GVDD1	Power	N/A
Y16	VSS	Ground	N/A
Y17	GVDD1	Power	N/A
Y18	VSS	Ground	N/A
Y19	GVDD1	Power	N/A
Y20	VSS	Ground	N/A
Y21	NVDD	Power	N/A
Y22	GPIO20/$\overline{\text{SPI_SL}}$[5,8]	I/O	NVDD
Y23	GPIO17/SPI_SCK[5,8]	I/O	NVDD
Y24	GPIO14/DRQ0/$\overline{\text{IRQ14}}$/RC14[5,8]	I/O	NVDD
Y25	GPIO12/$\overline{\text{IRQ12}}$/RC12[5,8]	I/O	NVDD
Y26	GPIO8/$\overline{\text{IRQ8}}$/RC8[5,8]	I/O	NVDD
Y27	NVDD	Power	N/A
Y28	VSS	Ground	N/A
AA1	GVDD1	Power	N/A
AA2	VSS	Ground	N/A
AA3	M1DQ18	I/O	GVDD1
AA4	GVDD1	Power	N/A
AA5	VSS	Ground	N/A
AA6	M1DQ20	I/O	GVDD1
AA7	GVDD1	Power	N/A
AA8	VSS	Ground	N/A
AA9	M1A15	O	GVDD1
AA10	M1CK2	O	GVDD1
AA11	M1MDIC0	I/O	GVDD1
AA12	M1VREF	I	GVDD1
AA13	M1MDIC1	I/O	GVDD1
AA14	M1DQ46	I/O	GVDD1
AA15	M1DQ47	I/O	GVDD1
AA16	M1DQ45	I/O	GVDD1
AA17	M1DQ41	I/O	GVDD1
AA18	M1DQ62	I/O	GVDD1
AA19	M1DQ63	I/O	GVDD1
AA20	M1DQ61	I/O	GVDD1
AA21	VSS	Ground	N/A
AA22	GPIO21[5,8]	I/O	NVDD
AA23	GPIO18/SPI_MOSI[5,8]	I/O	NVDD
AA24	GPIO16/RC16[5,8]	I/O	NVDD
AA25	GPIO4/DDN1/$\overline{\text{IRQ4}}$/RC4[5,8]	I/O	NVDD
AA26	GPIO9/$\overline{\text{IRQ9}}$/RC9[5,8]	I/O	NVDD
AA27	GPIO6/$\overline{\text{IRQ6}}$/RC6[5,8]	I/O	NVDD
AA28	GPIO1/$\overline{\text{IRQ1}}$/RC1[5,8]	I/O	NVDD

Downloaded from Arrow.com.

Table 1. Signal List by Ball Number (continued)

Ball Number	Signal Name[1,2]	Pin Type[10]	Power Rail Name
AB1	$\overline{\text{M1DQS2}}$	I/O	GVDD1
AB2	M1DQS2	I/O	GVDD1
AB3	M1DQ19	I/O	GVDD1
AB4	M1DM2	O	GVDD1
AB5	M1DQ21	I/O	GVDD1
AB6	M1DQ22	I/O	GVDD1
AB7	M1CKE0	O	GVDD1
AB8	M1A11	O	GVDD1
AB9	M1A7	O	GVDD1
AB10	$\overline{\text{M1CK2}}$	O	GVDD1
AB11	M1APAR_OUT	O	GVDD1
AB12	M1ODT1	O	GVDD1
AB13	$\overline{\text{M1APAR_IN}}$	I	GVDD1
AB14	M1DQ43	I/O	GVDD1
AB15	M1DM5	O	GVDD1
AB16	M1DQ44	I/O	GVDD1
AB17	M1DQ40	I/O	GVDD1
AB18	M1DQ59	I/O	GVDD1
AB19	M1DM7	O	GVDD1
AB20	M1DQ60	I/O	GVDD1
AB21	VSS	Ground	N/A
AB22	GPIO31/I2C_SDA[5,8]	I/O	NVDD
AB23	GPIO27/TMR4/RCW_SRC0[5,8]	I/O	NVDD
AB24	GPIO25/TMR2/RCW_SRC1[5,8]	I/O	NVDD
AB25	GPIO24/TMR1/RCW_SRC2[5,8]	I/O	NVDD
AB26	GPIO10/$\overline{\text{IRQ10}}$/RC10[5,8]	I/O	NVDD
AB27	GPIO5/$\overline{\text{IRQ5}}$/RC5[5,8]	I/O	NVDD
AB28	GPIO0/$\overline{\text{IRQ0}}$/RC0[5,8]	I/O	NVDD
AC1	VSS	Ground	N/A
AC2	GVDD1	Power	N/A
AC3	M1DQ16	I/O	GVDD1
AC4	VSS	Ground	N/A
AC5	GVDD1	Power	N/A
AC6	M1DQ17	I/O	GVDD1
AC7	VSS	Ground	N/A
AC8	GVDD1	Power	N/A
AC9	M1BA2	O	GVDD1
AC10	VSS	Ground	N/A
AC11	GVDD1	Power	N/A
AC12	M1A4	O	GVDD1
AC13	VSS	Ground	N/A
AC14	GVDD1	Power	N/A
AC15	M1DQ42	I/O	GVDD1
AC16	VSS	Ground	N/A
AC17	GVDD1	Power	N/A
AC18	M1DQ58	I/O	GVDD1

Downloaded from Arrow.com.

Table 1. Signal List by Ball Number (continued)

Ball Number	Signal Name[1,2]	Pin Type[10]	Power Rail Name
AC19	VSS	Ground	N/A
AC20	GVDD1	Power	N/A
AC21	VSS	Ground	N/A
AC22	NVDD	Power	N/A
AC23	GPIO30/I2C_SCL[5,8]	I/O	NVDD
AC24	GPIO26/TMR3[5,8]	I/O	NVDD
AC25	VSS	Ground	N/A
AC26	NVDD	Power	N/A
AC27	GPIO23/TMR0[5,8]	I/O	NVDD
AC28	GPIO22[5,8]	I/O	NVDD
AD1	M1DQ31	I/O	GVDD1
AD2	M1DQ30	I/O	GVDD1
AD3	M1DQ27	I/O	GVDD1
AD4	M1ECC7	I/O	GVDD1
AD5	M1ECC6	I/O	GVDD1
AD6	M1ECC3	I/O	GVDD1
AD7	M1A9	O	GVDD1
AD8	M1A6	O	GVDD1
AD9	M1A3	O	GVDD1
AD10	M1A10	O	GVDD1
AD11	$\overline{\text{M1RAS}}$	O	GVDD1
AD12	M1A2	O	GVDD1
AD13	M1DQ38	I/O	GVDD1
AD14	$\overline{\text{M1DQS}}$5	I/O	GVDD1
AD15	M1DQS5	I/O	GVDD1
AD16	M1DQ33	I/O	GVDD1
AD17	M1DQ56	I/O	GVDD1
AD18	M1DQ57	I/O	GVDD1
AD19	$\overline{\text{M1DQS7}}$	I/O	GVDD1
AD20	M1DQS7	I/O	GVDD1
AD21	VSS	Ground	N/A
AD22	GE2_TX_CTL	O	NVDD
AD23	GPIO15/DDN0/$\overline{\text{IRQ15}}$/RC15[5,8]	I/O	NVDD
AD24	GPIO13/$\overline{\text{IRQ13}}$/RC13[5,8]	I/O	NVDD
AD25	GE_MDC	O	NVDD
AD26	GE_MDIO	I/O	NVDD
AD27	TDM2TCK/GE1_TD3[3]	I/O	NVDD
AD28	TDM2RCK/GE1_TD0[3]	I/O	NVDD
AE1	GVDD1	Power	N/A
AE2	VSS	Ground	N/A
AE3	M1DQ29	I/O	GVDD1
AE4	GVDD1	Power	N/A
AE5	VSS	Ground	N/A
AE6	M1ECC5	I/O	GVDD1
AE7	GVDD1	Power	N/A
AE8	VSS	Ground	N/A

Downloaded from Arrow.com.

Table 1. Signal List by Ball Number (continued)

Ball Number	Signal Name[1,2]	Pin Type[10]	Power Rail Name
AE9	M1A8	O	GVDD1
AE10	GVDD1	Power	N/A
AE11	VSS	Ground	N/A
AE12	M1A0	O	GVDD1
AE13	GVDD1	Power	N/A
AE14	VSS	Ground	N/A
AE15	M1DQ39	I/O	GVDD1
AE16	GVDD1	Power	N/A
AE17	VSS	Ground	N/A
AE18	M1DQ54	I/O	GVDD1
AE19	GVDD1	Power	N/A
AE20	VSS	Ground	N/A
AE21	GPIO29/UART_TXD[5,8]	I/O	NVDD
AE22	TDM1TCK/GE2_RX_CLK[3]	I	NVDD
AE23	TDM1RSN/GE2_RX_CTL[3]	I/O	NVDD
AE24	VSS	Ground	N/A
AE25	TDM3RCK/GE1_GTX_CLK[3]	I/O	NVDD
AE26	TDM3TSN/GE1_RX_CLK[3]	I/O	NVDD
AE27	TDM2RSN/GE1_TD2[3]	I/O	NVDD
AE28	TDM2RDT/GE1_TD1[3]	I/O	NVDD
AF1	M1DQ28	I/O	GVDD1
AF2	M1DM3	O	GVDD1
AF3	M1DQ26	I/O	GVDD1
AF4	M1ECC4	I/O	GVDD1
AF5	M1DM8	O	GVDD1
AF6	M1ECC2	I/O	GVDD1
AF7	M1CKE1	O	GVDD1
AF8	M1CK0	O	GVDD1
AF9	$\overline{\text{M1CK0}}$	O	GVDD1
AF10	M1BA1	O	GVDD1
AF11	M1A1	O	GVDD1
AF12	$\overline{\text{M1WE}}$	O	GVDD1
AF13	M1DQ37	I/O	GVDD1
AF14	M1DM4	O	GVDD1
AF15	M1DQ36	I/O	GVDD1
AF16	M1DQ32	I/O	GVDD1
AF17	M1DQ55	I/O	GVDD1
AF18	M1DM6	O	GVDD1
AF19	M1DQ53	I/O	GVDD1
AF20	M1DQ52	I/O	GVDD1
AF21	GPIO28/UART_RXD[5,8]	I/O	NVDD
AF22	TDM0RSN/GE2_TD2[3]	I/O	NVDD
AF23	TDM0TDT/GE2_TD3[3]	I/O	NVDD
AF24	NVDD	Power	N/A
AF25	TDM2TSN/GE1_TX_CTL[3]	I/O	NVDD
AF26	GE1_RX_CTL	I	NVDD

Downloaded from Arrow.com.

Table 1. Signal List by Ball Number (continued)

Ball Number	Signal Name[1,2]	Pin Type[10]	Power Rail Name
AF27	TDM2TDT/GE1_TX_CLK[3]	I/O	NVDD
AF28	TDM3RSN/GE1_RD1[3]	I/O	NVDD
AG1	M1DQ24	I/O	GVDD1
AG2	GVDD1	Power	N/A
AG3	M1DQ25	I/O	GVDD1
AG4	VSS	Ground	N/A
AG5	GVDD1	Power	N/A
AG6	M1ECC1	I/O	GVDD1
AG7	VSS	Ground	N/A
AG8	GVDD1	Power	N/A
AG9	M1A13	O	GVDD1
AG10	VSS	Ground	N/A
AG11	GVDD1	Power	N/A
AG12	$\overline{\text{M1CS1}}$	O	GVDD1
AG13	VSS	Ground	N/A
AG14	GVDD1	Power	N/A
AG15	M1DQ35	I/O	GVDD1
AG16	VSS	Ground	N/A
AG17	GVDD1	Power	N/A
AG18	M1DQ51	I/O	GVDD1
AG19	VSS	Ground	N/A
AG20	GVDD1	Power	N/A
AG21	NVDD	Power	N/A
AG22	TDM1TSN/GE2_TD1[3]	I/O	NVDD
AG23	TDM1RDT/GE2_TX_CLK[3]	I/O	NVDD
AG24	TDM0TCK/GE2_GTX_CLK[3]	I/O	NVDD
AG25	TDM1TDT/GE2_TD0[3]	I/O	NVDD
AG26	VSS	Ground	N/A
AG27	NVDD	Power	N/A
AG28	TDM3RDT/GE1_RD0[3]	I/O	NVDD
AH1	Reserved.	NC	—
AH2	$\overline{\text{M1DQS3}}$	I/O	GVDD1
AH3	M1DQS3	I/O	GVDD1
AH4	M1ECC0	I/O	GVDD1
AH5	$\overline{\text{M1DQS8}}$	I/O	GVDD1
AH6	M1DQS8	I/O	GVDD1
AH7	M1A5	O	GVDD1
AH8	$\overline{\text{M1CK1}}$	O	GVDD1
AH9	M1CK1	O	GVDD1
AH10	$\overline{\text{M1CS0}}$	O	GVDD1
AH11	M1BA0	O	GVDD1
AH12	$\overline{\text{M1CAS}}$	O	GVDD1
AH13	M1DQ34	I/O	GVDD1
AH14	$\overline{\text{M1DQS4}}$	I/O	GVDD1
AH15	M1DQS4	I/O	GVDD1
AH16	M1DQ50	I/O	GVDD1

Downloaded from Arrow.com.

Table 1. Signal List by Ball Number (continued)

Ball Number	Signal Name[1,2]	Pin Type[10]	Power Rail Name
AH17	$\overline{\text{M1DQS6}}$	I/O	GVDD1
AH18	M1DQS6	I/O	GVDD1
AH19	M1DQ48	I/O	GVDD1
AH20	M1DQ49	I/O	GVDD1
AH21	VSS	Ground	N/A
AH22	TDM0RCK/GE2_RD2[3]	I/O	NVDD
AH23	TDM0RDT/GE2_RD3[3]	I/O	NVDD
AH24	TDM0TSN/GE2_RD0[3]	I/O	NVDD
AH25	TDM1RCK/GE2_RD1[3]	I/O	NVDD
AH26	TDM3TDT/GE1_RD3[3]	I/O	NVDD
AH27	TDM3TCK/GE1_RD2[3]	I	NVDD
AH28	VSS	Ground	N/A

Notes:
1. Reserved signals should be disconnected for compatibility with future revisions of the device. Non-user signals are reserved for manufacturing and test purposes only. The assigned signal name is used to indicate whether the signal must be unconnected (Reserved), pulled down (VSS), or pulled up (VDD).
2. Signal function during power-on reset is determined by the RCW source type.
3. Selection of TDM versus RGMII functionality is determined by the RCW bit values.
4. Selection of RapidIO, SGMII, and PCI Express functionality is determined by the RCW bit values.
5. Selection of the GPIO function and other functions is done by GPIO register setup. For configuration details, see the *GPIO* chapter in the *MSC8251 Reference Manual*.
6. Open-drain signal.
7. Internal 20 KΩ pull-up resistor.
8. For signals with GPIO functionality, the open-drain and internal 20 KΩ pull-up resistor can be configured by GPIO register programming. See the *GPIO* chapter of the *MSC8251 Reference Manual* for configuration details.
9. Connect to power supply via external filter. See **Section 3.2**, *PLL Power Supply Design Considerations* for details.
10. Pin types are: Ground = all VSS connections; Power = all VDD connections; I = Input; O = Output; I/O = Input/Output; NC = not connected.

Downloaded from Arrow.com.

2 Electrical Characteristics

This document contains detailed information on power considerations, DC/AC electrical characteristics, and AC timing specifications. For additional information, see the *MSC8251 Reference Manual*.

2.1 Maximum Ratings

In calculating timing requirements, adding a maximum value of one specification to a minimum value of another specification does not yield a reasonable sum. A maximum specification is calculated using a worst case variation of process parameter values in one direction. The minimum specification is calculated using the worst case for the same parameters in the opposite direction. Therefore, a “maximum” value for a specification never occurs in the same device with a “minimum” value for another specification; adding a maximum to a minimum represents a condition that can never exist.

Table 2 describes the maximum electrical ratings for the MSC8251.

Table 2. Absolute Maximum Ratings

Rating	Power Rail Name	Symbol	Value	Unit
Core supply voltage • Cores 0–3	VDD	V_{DD}	–0.3 to 1.1	V
PLL supply voltage[3]		V_{DDPLL0} V_{DDPLL1} V_{DDPLL2}	–0.3 to 1.1 –0.3 to 1.1 –0.3 to 1.1	V V V
M3 memory supply voltage	M3VDD	V_{DDM3}	–0.3 to 1.1	V
DDR memory supply voltage • DDR2 mode • DDR3 mode	GVDD1, GVDD2	V_{DDDDR}	 –0.3 to 1.98 –0.3 to 1.65	 V V
DDR reference voltage	MVREF	MV_{REF}	–0.3 to 0.51 × V_{DDDDR}	V
Input DDR voltage		V_{INDDR}	–0.3 to V_{DDDDR} + 0.3	V
I/O voltage excluding DDR and RapidIO lines	NVDD, QVDD	V_{DDIO}	–0.3 to 2.625	V
Input I/O voltage		V_{INIO}	–0.3 to V_{DDIO} + 0.3	V
RapidIO pad voltage	SXPVDD1, SXPVDD2	V_{DDSXP}	–0.3 to 1.26	V
Rapid I/O core voltage	SXCVDD1, SXCVDD2	V_{DDSXC}	–0.3 to 1.21	V
Rapid I/O PLL voltage[3]		$V_{DDRIOPLL}$	–0.3 to 1.21	V
Input RapidIO I/O voltage		V_{INRIO}	–0.3 to V_{DDSXC} + 0.3	V
Operating temperature		T_J	–40 to 105	°C
Storage temperature range		T_{STG}	–55 to +150	°C

Notes:
1. Functional operating conditions are given in Table 3.
2. Absolute maximum ratings are stress ratings only, and functional operation at the maximum is not guaranteed. Stress beyond the listed limits may affect device reliability or cause permanent damage.
3. PLL supply voltage is specified at input of the filter and not at pin of the MSC8251 (see Figure 37 and Figure 38)

Downloaded from Arrow.com.

2.2 Recommended Operating Conditions

Table 3 lists recommended operating conditions. Proper device operation outside of these conditions is not guaranteed.

Table 3. Recommended Operating Conditions

Rating	Symbol	Min	Nominal	Max	Unit
Core supply voltage	V_{DD}	0.97	1.0	1.05	V
M3 memory supply voltage	V_{DDM3}	0.97	1.0	1.05	V
DDR memory supply voltage • DDR2 mode • DDR3 mode DDR reference voltage	V_{DDDDR} MV_{REF}	 1.7 1.425 $0.49 \times V_{DDDDR}$	 1.8 1.5 $0.5 \times V_{DDDDR}$	 1.9 1.575 $0.51 \times V_{DDDDR}$	 V V V
I/O voltage excluding DDR and RapidIO lines	V_{DDIO}	2.375	2.5	2.625	V
Rapid I/O pad voltage	V_{DDSXP}	0.97	1.0	1.05	V
Rapid I/O core voltage	V_{DDSXC}	0.97	1.0	1.05	V
Operating temperature range: • Standard • Higher • Extended	 T_J T_J T_A T_J	 0 0 –40 —		 90 105 — 105	 °C °C °C
Typical power: 1 GHz at 1.0 V[1]	P	—	2.91	—	W

Notes: **1.** The typical power values are derived for a device running under the following conditions.
- One core running at 1 GHz, Core voltage at 1V, 75% utilization (50% control/50% DSP).
- A single 64 bit DDR3 running at 800 MHz, 50% utilization (50% reads/50% writes).
- M3 Memory 50% utilized, PCI Express controller disabled, TDM enabled 20% loading, Serial RapidIO controller disabled.
- 1 RGMII at 1 Gbps 50% loading.
- A junction temperature of 60°C.

2.3 Thermal Characteristics

Table 4 describes thermal characteristics of the MSC8251 for the FC-PBGA packages.

Table 4. Thermal Characteristics for the MSC8251

Characteristic	Symbol	FC-PBGA 29×29 mm^2		Unit
		Natural Convection	200 ft/min (1 m/s) airflow	
Junction-to-ambient[1, 2]	$R_{\theta JA}$	18	12	°C/W
Junction-to-ambient, four-layer board[1, 2]	$R_{\theta JA}$	13	9	°C/W
Junction-to-board (bottom)[3]	$R_{\theta JB}$	5		°C/W
Junction-to-case[4]	$R_{\theta JC}$	0.6		°C/W

Notes:
1. Junction temperature is a function of die size, on-chip power dissipation, package thermal resistance, mounting site (board) temperature, ambient temperature, air flow, power dissipation of other components on the board, and board thermal resistance.
2. Junction-to-ambient thermal resistance determined per JEDEC JESD51-3 and JESDC51-6. Thermal test board meets JEDEC specification for the specified package.
3. Junction-to-board thermal resistance determined per JEDEC JESD 51-8. Thermal test board meets JEDEC specification for the specified package.
4. Junction-to-case at the top of the package determined using MIL- STD-883 Method 1012.1. The cold plate temperature is used for the case temperature. Reported value includes the thermal resistance of the interface layer

Downloaded from Arrow.com.

2.4 CLKIN Requirements

Table 5 summarizes the required characteristics for the CLKIN signal.

Table 5. CLKIN Requirements

Parameter/Condition[1]	Symbol	Min	Typ	Max	Unit	Notes
CLKIN duty cycle	—	40	—	60	%	2
CLKIN slew rate	—	1	—	4	V/ns	3
CLKIN peak period jitter	—	—	—	±150	ps	—
CLKIN jitter phase noise at –56 dBc	—	—	—	500	KHz	4
AC input swing limits	ΔV_{AC}	1.5	—	—	V	—
Input capacitance	C_{IN}	—	—	15	pf	—

Notes:
1. For clock frequencies, see the *Clock* chapter in the *MSC8251 Reference Manual.*
2. Measured at the rising edge and/or the falling edge at $V_{DDIO}/2$.
3. Slew rate as measured from ±20% to 80% of voltage swing at clock input.
4. Phase noise is calculated as FFT of TIE jitter.

2.5 DC Electrical Characteristics

This section describes the DC electrical characteristics for the MSC8251.

2.5.1 DDR SDRAM DC Electrical Characteristics

This section describes the DC electrical specifications for the DDR SDRAM interface of the MSC8251.

Note: DDR2 SDRAM uses V_{DDDDR}(typ) = 1.8 V and DDR3 SDRAM uses V_{DDDDR}(typ) = 1.5 V.

2.5.1.1 DDR2 (1.8 V) SDRAM DC Electrical Characteristics

Table 6 provides the recommended operating conditions for the DDR SDRAM controller when interfacing to DDR2 SDRAM.

Note: At recommended operating conditions (see Table 3) with V_{DDDDR} = 1.8 V.

Table 6. DDR2 SDRAM Interface DC Electrical Characteristics

Parameter/Condition	Symbol	Min	Max	Unit	Notes
I/O reference voltage	MV_{REF}	$0.49 \times V_{DDDDR}$	$0.51 \times V_{DDDDR}$	V	2, 3, 4
Input high voltage	V_{IH}	MV_{REF} + 0.125	V_{DDDDR} + 0.3	V	5
Input low voltage	V_{IL}	–0.3	MV_{REF} – 0.125	V	5
I/O leakage current	I_{OZ}	–50	50	μA	6
Output high current (V_{OUT} (VOH) = 1.37 V)	I_{OH}	–13.4	—	mA	7
Output low current (V_{OUT} (VOL) = 0.33 V)	I_{OL}	13.4	—	mA	7

Notes:
1. V_{DDDDR} is expected to be within 50 mV of the DRAM V_{DD} supply voltage at all times. The DRAM and memory controller can use the same or different sources.
2. MV_{REF} is expected to be equal to $0.5 \times V_{DDDDR}$, and to track V_{DDDDR} DC variations as measured at the receiver. Peak-to-peak noise on MV_{REF} may not exceed ±2% of the DC value.
3. V_{TT} is not applied directly to the device. It is the supply to which far end signal termination is made and is expected to be equal to MV_{REF} with a minimum value of MV_{REF} – 0.4 and a maximum value of MV_{REF} + 0.04 V. V_{TT} should track variations in the DC-level of MV_{REF}.
4. The voltage regulator for MV_{REF} must be able to supply up to 300 μA.
5. Input capacitance load for DQ, DQS, and DQS signals are available in the IBIS models.
6. Output leakage is measured with all outputs are disabled, $0 V \leq V_{OUT} \leq V_{DDDDR}$.
7. Refer to the IBIS model for the complete output IV curve characteristics.

Downloaded from Arrow.com.

2.5.1.2 DDR3 (1.5V) SDRAM DC Electrical Characteristics

Table 7 provides the recommended operating conditions for the DDR SDRAM controller when interfacing to DDR3 SDRAM.

Note: At recommended operating conditions (see Table 3) with V_{DDDDR} = 1.5 V.

Table 7. DDR3 SDRAM Interface DC Electrical Characteristics

Parameter/Condition	Symbol	Min	Max	Unit	Notes
I/O reference voltage	MV_{REF}	0.49 × V_{DDDDR}	0.51 × V_{DDDDR}	V	2,3,4
Input high voltage	V_{IH}	MV_{REF} + 0.100	V_{DDDDR}	V	5
Input low voltage	V_{IL}	GND	MV_{REF} – 0.100	V	5
I/O leakage current	I_{OZ}	–50	50	μA	6

Notes:
1. V_{DDDDR} is expected to be within 50 mV of the DRAM V_{DD} at all times. The DRAM and memory controller can use the same or different sources.
2. MV_{REF} is expected to be equal to 0.5 × V_{DDDDR} and to track V_{DDDDR} DC variations as measured at the receiver. Peak-to-peak noise on MV_{REF} may not exceed ±1% of the DC value.
3. V_{TT} is not applied directly to the device. It is the supply to which far end signal termination is made and is expected to be equal to MV_{REF} with a minimum value of MV_{REF} – 0.4 and a maximum value of MV_{REF} + 0.04 V. V_{TT} should track variations in the DC-level of MV_{REF}.
4. The voltage regulator for MV_{REF} must be able to supply up to 250 μA.
5. Input capacitance load for DQ, DQS, and $\overline{DQS}$ signals are available in the IBIS models.
6. Output leakage is measured with all outputs are disabled, 0 V ≤ V_{OUT} ≤ V_{DDDDR}.

2.5.1.3 DDR2/DDR3 SDRAM Capacitance

Table 8 provides the DDR controller interface capacitance for DDR2 and DDR3 memory.

Note: At recommended operating conditions (see Table 3) with V_{DDDDR} = 1.8 V for DDR2 memory or V_{DDDDR} = 1.5 V for DDR3 memory.

Table 8. DDR2/DDR3 SDRAM Capacitance

Parameter	Symbol	Min	Max	Unit
I/O capacitance: DQ, DQS, $\overline{DQS}$	C_{IO}	6	8	pF
Delta I/O capacitance: DQ, DQS, $\overline{DQS}$	C_{DIO}	—	0.5	pF

Note: Guaranteed by FAB process and micro-construction.

Downloaded from Arrow.com.

2.5.1.4 DDR Reference Current Draw

Table 9 lists the current draw characteristics for MV_{REF}.

Note: Values when used at recommended operating conditions (see Table 3).

Table 9. Current Draw Characteristics for MV_{REF}

Parameter / Condition	Symbol	Min	Max	Unit
Current draw for MV_{REFn} • DDR2 SDRAM • DDR3 SDRAM	I_{MVREFn}	—	 300 250	 μA μA

2.5.2 High-Speed Serial Interface (HSSI) DC Electrical Characteristics

The MSC8251 features an HSSI that includes two 4-channel SerDes ports used for high-speed serial interface applications (PCI Express, Serial RapidIO interfaces, and SGMII). This section and its subsections describe the common portion of the SerDes DC, including the DC requirements for the SerDes reference clocks and the SerDes data lane transmitter (Tx) and receiver (Rx) reference circuits. The data lane circuit specifications are specific for each supported interface, and they have individual subsections by protocol. The selection of individual data channel functionality is done via the Reset Configuration Word High Register (RCWHR) SerDes Protocol selection fields (S1P and S2P). Specific AC electrical characteristics are defined in Section 2.6.2, "HSSI AC Timing Specifications."

2.5.2.1 Signal Term Definitions

The SerDes interface uses differential signalling to transfer data across the serial link. This section defines terms used in the description and specification of differential signals. Figure 4 shows how the signals are defined. For illustration purposes only, one SerDes lane is used in the description. Figure 4 shows the waveform for either a transmitter output (SR[1–2]_TX and $\overline{\text{SR[1–2]_TX}}$) or a receiver input (SR[1–2]_RX and $\overline{\text{SR[1–2]_RX}}$). Each signal swings between A volts and B volts where A > B.

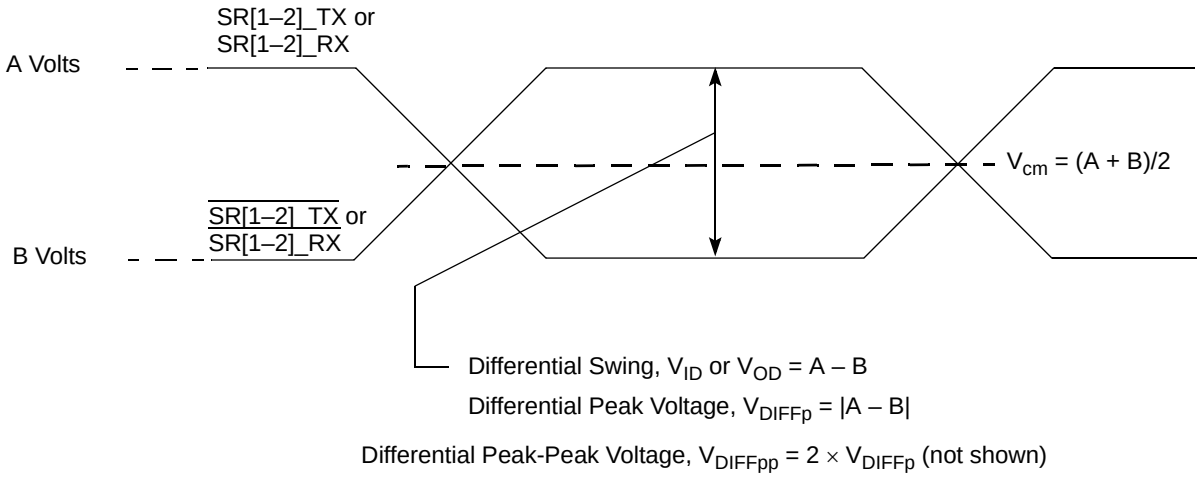

Figure 4. Differential Voltage Definitions for Transmitter or Receiver

Downloaded from Arrow.com.

Using this waveform, the definitions are listed in Table 10. To simplify the illustration, the definitions assume that the SerDes transmitter and receiver operate in a fully symmetrical differential signalling environment.

Table 10. Differential Signal Definitions

Term	Definition
Single-Ended Swing	The transmitter output signals and the receiver input signals SR[1–2]_TX, $\overline{\text{SR[1–2]_TX}}$, SR[1–2]_RX and $\overline{\text{SR[1–2]_RX}}$ each have a peak-to-peak swing of A – B volts. This is also referred to as each signal wire's single-ended swing.
Differential Output Voltage, V_{OD} (or **Differential Output Swing**):	The differential output voltage (or swing) of the transmitter, V_{OD}, is defined as the difference of the two complimentary output voltages: $V_{SR[1–2]_TX} - V_{\overline{SR[1–2]_TX}}$. The V_{OD} value can be either positive or negative.
Differential Input Voltage, V_{ID} (or **Differential Input Swing**)	The differential input voltage (or swing) of the receiver, V_{ID}, is defined as the difference of the two complimentary input voltages: $V_{SR[1–2]_RX} - V_{\overline{SR[1–2]_RX}}$. The V_{ID} value can be either positive or negative.
Differential Peak Voltage, **V_{DIFFp}**	The peak value of the differential transmitter output signal or the differential receiver input signal is defined as the differential peak voltage, $V_{DIFFp} = \lvert A – B \rvert$ volts.
Differential Peak-to-Peak, **$V_{DIFFp-p}$**	Since the differential output signal of the transmitter and the differential input signal of the receiver each range from A – B to –(A – B) volts, the peak-to-peak value of the differential transmitter output signal or the differential receiver input signal is defined as differential peak-to-peak voltage, $V_{DIFFp-p} = 2 \times V_{DIFFp} = 2 \times \lvert(A – B)\rvert$ volts, which is twice the differential swing in amplitude, or twice of the differential peak. For example, the output differential peak-peak voltage can also be calculated as $V_{TX-DIFFp-p} = 2 \times \lvert V_{OD}\rvert$.
Differential Waveform	The differential waveform is constructed by subtracting the inverting signal ($\overline{\text{SR[1–2]_TX}}$, for example) from the non-inverting signal (SR[1–2]_TX, for example) within a differential pair. There is only one signal trace curve in a differential waveform. The voltage represented in the differential waveform is not referenced to ground. Refer to Figure 16 as an example for differential waveform.
Common Mode Voltage, V_{cm}	The common mode voltage is equal to half of the sum of the voltages between each conductor of a balanced interchange circuit and ground. In this example, for SerDes output, $V_{cm_out} = (V_{SR[1–2]_TX} + V_{\overline{SR[1–2]_TX}}) \div 2 = (A + B) \div 2$, which is the arithmetic mean of the two complimentary output voltages within a differential pair. In a system, the common mode voltage may often differ from one component's output to the other's input. It may be different between the receiver input and driver output circuits within the same component. It is also referred to as the DC offset on some occasions.

To illustrate these definitions using real values, consider the example of a current mode logic (CML) transmitter that has a common mode voltage of 2.25 V and outputs, TD and $\overline{\text{TD}}$. If these outputs have a swing from 2.0 V to 2.5 V, the peak-to-peak voltage swing of each signal (TD or $\overline{\text{TD}}$) is 500 mV p-p, which is referred to as the single-ended swing for each signal. Because the differential signaling environment is fully symmetrical in this example, the transmitter output differential swing (V_{OD}) has the same amplitude as each signal single-ended swing. The differential output signal ranges between 500 mV and –500 mV. In other words, V_{OD} is 500 mV in one phase and –500 mV in the other phase. The peak differential voltage (V_{DIFFp}) is 500 mV. The peak-to-peak differential voltage ($V_{DIFFp-p}$) is 1000 mV p-p.

Downloaded from Arrow.com.

2.5.2.2 SerDes Reference Clock Receiver Characteristics

The SerDes reference clock inputs are applied to an internal PLL whose output creates the clock used by the corresponding SerDes lanes. The SerDes reference clock inputs are SR1_REF_CLK/$\overline{\text{SR1_REF_CLK}}$ or SR2_REF_CLK/$\overline{\text{SR2_REF_CLK}}$. Figure 5 shows a receiver reference diagram of the SerDes reference clocks.

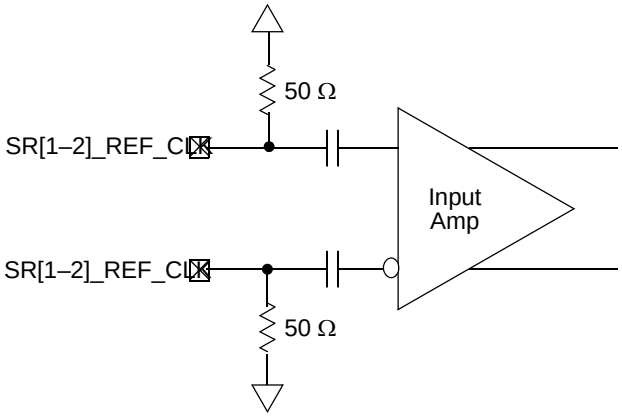

Figure 5. Receiver of SerDes Reference Clocks

The characteristics of the clock signals are as follows:

- The supply voltage requirements for V_{DDSXC} are as specified in **Table 3.**
- The SerDes reference clock receiver reference circuit structure is as follows:
  - The SR[1–2]_REF_CLK and $\overline{\text{SR[1–2]_REF_CLK}}$ are internally AC-coupled differential inputs as shown in Figure 5. Each differential clock input (SR[1–2]_REF_CLK or $\overline{\text{SR[1–2]_REF_CLK}}$) has on-chip 50-Ω termination to GND_{SXC} followed by on-chip AC-coupling.
  - The external reference clock driver must be able to drive this termination.
  - The SerDes reference clock input can be either differential or single-ended. Refer to the differential mode and single-ended mode descriptions below for detailed requirements.
- The maximum average current requirement also determines the common mode voltage range.
  - When the SerDes reference clock differential inputs are DC coupled externally with the clock driver chip, the maximum average current allowed for each input pin is 8 mA. In this case, the exact common mode input voltage is not critical as long as it is within the range allowed by the maximum average current of 8 mA because the input is AC-coupled on-chip.
  - This current limitation sets the maximum common mode input voltage to be less than 0.4 V (0.4 V / 50 = 8 mA) while the minimum common mode input level is 0.1 V above GND_{SXC}. For example, a clock with a 50/50 duty cycle can be produced by a clock driver with output driven by its current source from 0 mA to 16 mA (0–0.8 V), such that each phase of the differential input has a single-ended swing from 0 V to 800 mV with the common mode voltage at 400 mV.
  - If the device driving the SR[1–2]_REF_CLK and $\overline{\text{SR[1–2]_REF_CLK}}$ inputs cannot drive 50 Ω to GND_{SXC} DC or the drive strength of the clock driver chip exceeds the maximum input current limitations, it must be AC-coupled externally.
- The input amplitude requirement is described in detail in the following sections.

Downloaded from Arrow.com.

2.5.2.3 SerDes Transmitter and Receiver Reference Circuits

Figure 6 shows the reference circuits for SerDes data lane transmitter and receiver.

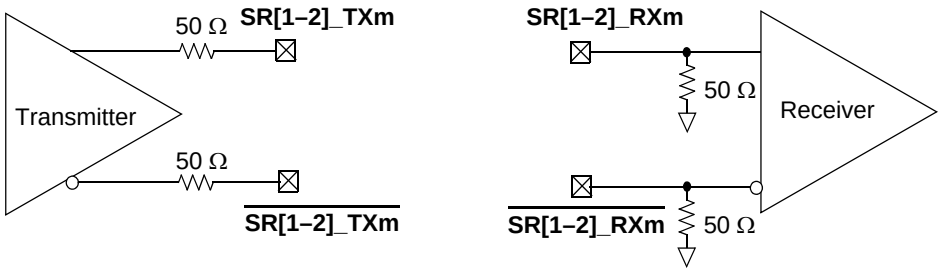

Note: The [1–2] indicates the specific SerDes Interface (1 or 2) and the m indicates the specific channel within that interface (0,1,2,3). Actual signals are assigned by the HRCW assignments at reset (see **Chapter 5**, *Reset* in the reference manual for details)

Figure 6. SerDes Transmitter and Receiver Reference Circuits

2.5.3 DC-Level Requirements for SerDes Interfaces

The following subsections define the DC-level requirements for the SerDes reference clocks, the PCI Express data lines, the Serial RapidIO data lines, and the SGMII data lines.

2.5.3.1 DC-Level Requirements for SerDes Reference Clocks

The DC-level requirement for the SerDes reference clock inputs is different depending on the signaling mode used to connect the clock driver chip and SerDes reference clock inputs, as described below:

- Differential Mode
  - The input amplitude of the differential clock must be between 400 mV and 1600 mV differential peak-peak (or between 200 mV and 800 mV differential peak). In other words, each signal wire of the differential pair must have a single-ended swing of less than 800 mV and greater than 200 mV. This requirement is the same for both external DC-coupled or AC-coupled connection.
  - For an external DC-coupled connection, the maximum average current requirements sets the requirement for average voltage (common mode voltage) as between 100 mV and 400 mV. Figure 7 shows the SerDes reference clock input requirement for DC-coupled connection scheme.

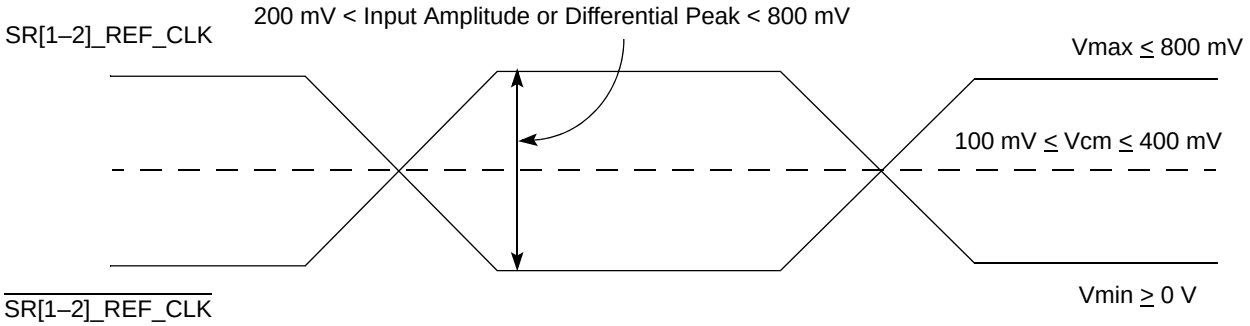

Figure 7. Differential Reference Clock Input DC Requirements (External DC-Coupled)

Downloaded from Arrow.com.

— For an external AC-coupled connection, there is no common mode voltage requirement for the clock driver. Because the external AC-coupling capacitor blocks the DC-level, the clock driver and the SerDes reference clock receiver operate in different command mode voltages. The SerDes reference clock receiver in this connection scheme has its common mode voltage set to GND_{SXC}. Each signal wire of the differential inputs is allowed to swing below and above the command mode voltage GND_{SXC}. Figure 8 shows the SerDes reference clock input requirement for AC-coupled connection scheme.

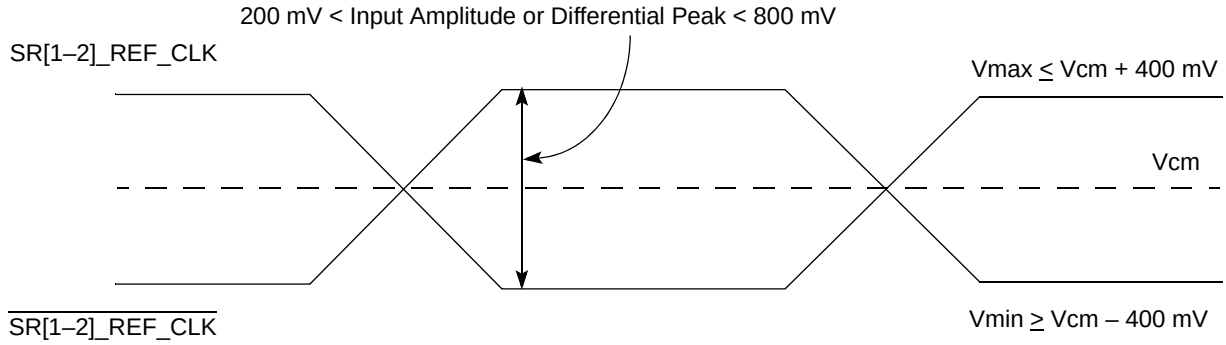

Figure 8. Differential Reference Clock Input DC Requirements (External AC-Coupled)

- Single-Ended Mode
  — The reference clock can also be single-ended. The SR[1–2]_REF_CLK input amplitude (single-ended swing) must be between 400 mV and 800 mV peak-peak (from V_{MIN} to V_{MAX}) with $\overline{\text{SR[1–2]_REF_CLK}}$ either left unconnected or tied to ground.
  — The SR[1–2]_REF_CLK input average voltage must be between 200 and 400 mV. Figure 9 shows the SerDes reference clock input requirement for single-ended signalling mode.
  — To meet the input amplitude requirement, the reference clock inputs may need to be DC- or AC-coupled externally. For the best noise performance, the reference of the clock could be DC- or AC-coupled into the unused phase ($\overline{\text{SR[1–2]_REF_CLK}}$) through the same source impedance as the clock input (SR[1–2]_REF_CLK) in use.

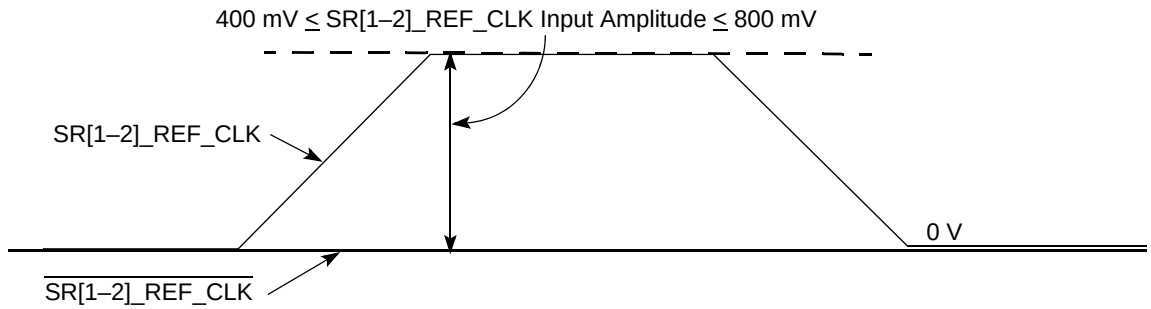

Figure 9. Single-Ended Reference Clock Input DC Requirements

2.5.3.2 DC-Level Requirements for PCI Express Configurations

The DC-level requirements for PCI Express implementations have separate requirements for the Tx and Rx lines. The MSC8251 supports a 2.5 Gbps PCI Express interface defined by the *PCI Express Base Specification, Revision 1.0a*. The transmitter specifications are defined in Table 11 and the receiver specifications are defined in Table 12.

Downloaded from Arrow.com.

Note: Specifications are valid at the recommended operating conditions listed in Table 3.

Table 11. PCI Express (2.5 Gbps) Differential Transmitter (Tx) Output DC Specifications

Parameter	Symbol	Min	Typical	Max	Units	Notes
Differential peak-to-peak output voltage	$V_{TX\text{-}DIFFp\text{-}p}$	800	1000	1200	mV	1
De-emphasized differential output voltage (ratio)	$V_{TX\text{-}DE\text{-}RATIO}$	3.0	3.5	4.0	dB	2
DC differential Tx impedance	$Z_{TX\text{-}DIFF\text{-}DC}$	80	100	120	Ω	3
Transmitter DC impedance	$Z_{TX\text{-}DC}$	40	50	60	Ω	4

Notes:
1. $V_{TX\text{-}DIFFp\text{-}p} = 2 \times |V_{TX\text{-}D+} - V_{TX\text{-}D\text{-}}|$ Measured at the package pins with a test load of 50 Ω to GND on each pin.
2. Ratio of the $V_{TX\text{-}DIFFp\text{-}p}$ of the second and following bits after a transition divided by the $V_{TX\text{-}DIFFp\text{-}p}$ of the first bit after a transition. Measured at the package pins with a test load of 50 Ω to GND on each pin.
3. Tx DC differential mode low impedance
4. Required Tx D+ as well as D– DC Impedance during all states

Table 12. PCI Express (2.5 Gbps) Differential Receiver (Rx) Input DC Specifications

Parameter	Symbol	Min	Typical	Max	Units	Notes
Differential input peak-to-peak voltage	$V_{RX\text{-}DIFFp\text{-}p}$	120	1000	1200	mV	1
DC differential Input Impedance	$Z_{RX\text{-}DIFF\text{-}DC}$	80	100	120	Ω	2
DC input impedance	$Z_{RX\text{-}DC}$	40	50	60	Ω	3
Powered down DC input impedance	$Z_{RX\text{-}HIGH\text{-}IMP\text{-}DC}$	50	—	—	KΩ	4
Electrical idle detect threshold	$V_{RX\text{-}IDLE\text{-}DET\text{-}DIFFp\text{-}p}$	65	—	175	mV	5

Notes:
1. $V_{RX\text{-}DIFFp\text{-}p} = 2 \times |V_{RX\text{-}D+} - V_{RX\text{-}D\text{-}}|$ Measured at the package pins with a test load of 50 Ω to GND on each pin.
2. Rx DC differential mode impedance. Impedance during all LTSSM states. When transitioning from a fundamental reset to detect (the initial state of the LTSSM), there is a 5 ms transition time before the receiver termination values must be met on all unconfigured lanes of a port.
3. Required Rx D+ as well as D– DC Impedance (50 ±20% tolerance). Measured at the package pins with a test load of 50 Ω to GND on each pin. Impedance during all LTSSM states. When transitioning from a fundamental reset to detect (the initial state of the LTSSM), there is a 5 ms transition time before the receiver termination values must be met on all unconfigured lanes of a port.
4. Required Rx D+ as well as D– DC Impedance when the receiver terminations do not have power. The Rx DC common mode impedance that exists when no power is present or fundamental reset is asserted. This helps ensure that the receiver detect circuit does not falsely assume a receiver is powered on when it is not. This term must be measured at 300 mV above the Rx ground.
5. $V_{RX\text{-}IDLE\text{-}DET\text{-}DIFFp\text{-}p} = 2 \times |V_{RX\text{-}D+} - V_{RX\text{-}D–}|$. Measured at the package pins of the receiver

2.5.3.3 DC-Level Requirements for Serial RapidIO Configurations

This sections provided various DC-level requirements for Serial RapidIO Configurations.

Note: Specifications are valid at the recommended operating conditions listed in Table 3.

Table 13. Serial RapidIO Transmitter DC Specifications

Parameter	Symbol	Min	Typical	Max	Units	Notes
Output voltage	V_O	–0.40	—	2.30	V	1
Long run differential output voltage	V_{DIFFPP}	800	—	1600	mVp-p	—
Short run differential output voltage	V_{DIFFPP}	500	—	1000	mVp-p	—

Note: Voltage relative to COMMON of either signal comprising a differential pair.

Downloaded from Arrow.com.

Table 14. Serial RapidIO Receiver DC Specifications

Parameter	Symbol	Min	Typical	Max	Units	Notes
Differential input voltage	V_{IN}	200	—	1600	mVp-p	1
Notes: **1.** Measured at receiver.						

2.5.3.4 DC-Level Requirements for SGMII Configurations

Note: Specifications are valid at the recommended operating conditions listed in Table 3

Table 15 describes the SGMII SerDes transmitter AC-coupled DC electrical characteristics. Transmitter DC characteristics are measured at the transmitter outputs (SR[1–2]_TX[n] and $\overline{\text{SR[1–2]_TX[n]}}$) as shown in Figure 10.

Table 15. SGMII DC Transmitter Electrical Characteristics

Parameter	Symbol	Min	Typ	Max	Unit	Notes
Output high voltage	V_{OH}	—	—	$XV_{DD_SRDS\text{-}Typ}/2 + \lvert V_{OD}\rvert_{\text{-}max}/2$	mV	1
Output low voltage	V_{OL}	$XV_{DD_SRDS\text{-}Typ}/2 - \lvert V_{OD}\rvert_{\text{-}max}/2$	—	—	mV	1
Output differential voltage ($XV_{DD\text{-}Typ}$ at 1.0 V)	$\lvert V_{OD}\rvert$	323	500	725	mV	2,3,4
		296	459	665		2,3,5
		269	417	604		2,3,6
		243	376	545		2,3,7
		215	333	483		2,3,8
		189	292	424		2,3,9
		162	250	362		2,3,10
Output impedance (single-ended)	R_O	40	50	60	Ω	—

Notes:
1. This does not align to DC-coupled SGMII. $XV_{DD_SRDS2\text{-}Typ}$ = 1.1 V.
2. The $\lvert V_{OD}\rvert$ value shown in the table assumes full multitude by setting srd_smit_lvl as 000 and the following transmit equalization setting in the XMITEQ**AB** (for lanes A and B) or XMITEQ**EF** (for lanes E and F) bit field of Control Register:
   - The MSB (bit 0) of the above bit field is set to zero (selecting the full $V_{DD\text{-}DIFF\text{-}p\text{-}p}$ amplitude which is power up default);
   - The LSB (bit [1–3]) of the above bit field is set based on the equalization settings listed in notes 4 through 10.
3. The $\lvert V_{OD}\rvert$ value shown in the Typ column is based on the condition of $XV_{DD_SRDS2\text{-}Typ}$ = 1.0 V, no common mode offset variation (V_{OS} =500mV), SerDes transmitter is terminated with 100-Ω differential load between
4. Equalization setting: 1.0x: 0000.
5. Equalization setting: 1.09x: 1000.
6. Equalization setting: 1.2x: 0100.
7. Equalization setting: 1.33x: 1100.
8. Equalization setting: 1.5x: 0010.
9. Equalization setting: 1.71x: 1010.
10. Equalization setting: 2.0x: 0110.
11. $\lvert V_{OD}\rvert = \lvert V_{SR[1–2]_TXn} - V_{\overline{SR[1–2]_TXn}}\rvert$. $\lvert V_{OD}\rvert$ is also referred to as output differential peak voltage. $V_{TX\text{-}DIFFp\text{-}p} = 2*\lvert V_{OD}\rvert$.

Downloaded from Arrow.com.

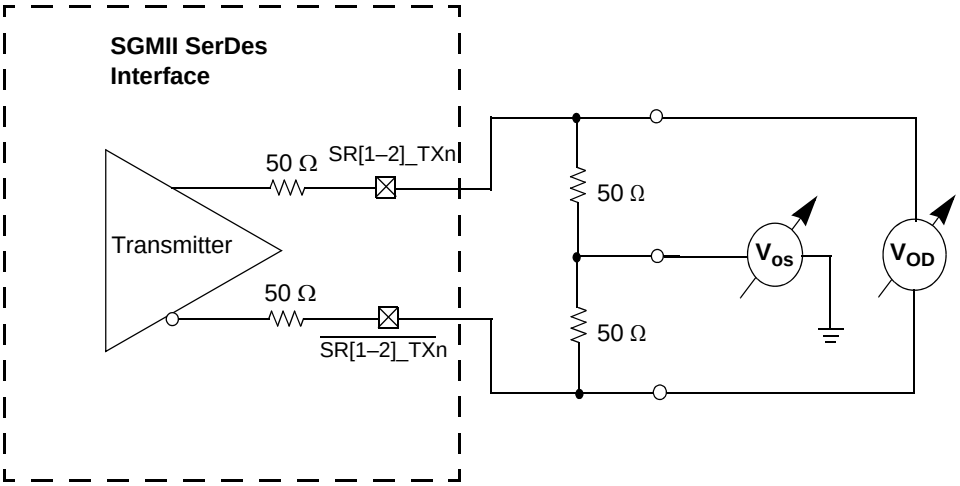

Figure 10. SGMII Transmitter DC Measurement Circuit

Table 16 describes the SGMII SerDes receiver AC-coupled DC electrical characteristics.

Table 16. SGMII DC Receiver Electrical Characteristics[5]

Parameter		Symbol	Min	Typ	Max	Unit	Notes
DC Input voltage range		—		N/A		—	1
Input differential voltage	SRDSnCR4[EICE{12:10}] = 0b001 for SGMII1 SRDSnCR4[EICF{4:2}] = 0b001 for SGMII2	$V_{RX_DIFFp\text{-}p}$	100	—	1200	mV	2, 4
	SRDSnCR4[EICE{12:10}] = 0b100 for SGMII1 SRDSnCR4[EICF{4:2}] = 0b100 for SGMII2		175	—			
Loss of signal threshold	SRDSnCR4[EICE{12:10}] = 0b001 for SGMII1 SRDSnCR4[EICF{4:2}] = 0b001 for SGMII2	VLOS	30	—	100	mV	3, 4
	SRDSnCR4[EICE{12:10}] = 0b100 for SGMII1 SRDSnCR4[EICF{4:2}] = 0b100 for SGMII2		65	—	175		
Receiver differential input impedance		Z_{RX_DIFF}	80	—	120	W	—

Notes:
1. Input must be externally AC-coupled.
2. $V_{RX_DIFFp\text{-}p}$ is also referred to as peak-to-peak input differential voltage.
3. The concept of this parameter is equivalent to the Electrical Idle Detect Threshold parameter in the PCI Express interface. Refer to the PCI Express Differential Receiver (RX) Input Specifications section of the *PCI Express Specification* document. for details.
4. The values for SGMII1 and SGMII2 are selected in the SRDS control registers.
5. The supply voltage is 1.0 V.

Downloaded from Arrow.com.

2.5.4 RGMII and Other Interface DC Electrical Characteristics

Table 17 describes the DC electrical characteristics for the following interfaces:

- RGMII Ethernet
- SPI
- TDM
- GPIO
- UART
- TIMER
- EE
- I^2C
- Interrupts ($\overline{IRQn}$, $\overline{NMI_OUT}$, $\overline{INT_OUT}$)
- Clock and resets (CLKIN, $\overline{PORESET}$, $\overline{HRESET}$, $\overline{SRESET}$)
- DMA External Request
- JTAG signals

Table 17. 2.5 V I/O DC Electrical Characteristics

Characteristic	Symbol	Min	Max	Unit	Notes
Input high voltage	V_{IH}	1.7	—	V	1
Input low voltage	V_{IL}	—	0.7	V	1
Input high current ($V_{IN} = V_{DDIO}$)	I_{IN}	—	30	μA	2
Output high voltage (V_{DDIO} = min, I_{OH} = –1.0 mA)	V_{OH}	2.0	VDDIO + 0.3	V	1
Output low voltage (V_{DDIO} = min, I_{OL}= 1.0 mA)	V_{OL}	GND – 0.3	0.40	V	1

Notes: **1.** The min V_{IL} and max V_{IH} values are based on the respective min and max V_{IN} values listed in Table 3.
2. The symbol V_{IN} represents the input voltage of the supply. It is referenced in Table 3.

Downloaded from Arrow.com.

2.6 AC Timing Characteristics

This section describes the AC timing characteristics for the MSC8251.

2.6.1 DDR SDRAM AC Timing Specifications

This section describes the AC electrical characteristics for the DDR SDRAM interface.

2.6.1.1 DDR SDRAM Input AC Timing Specifications

Table 18 provides the input AC timing specifications for the DDR SDRAM when V_{DDDDR} (typ) = 1.8 V.

Table 18. DDR2 SDRAM Input AC Timing Specifications for 1.8 V Interface

Parameter	Symbol	Min	Max	Unit
AC input low voltage	V_{IL}	—	MV_{REF} – 0.20	V
AC input high voltage	V_{IH}	MV_{REF} + 0.20	—	V
Note: At recommended operating conditions with V_{DDDDR} of 1.8 ± 5%.				

Table 19 provides the input AC timing specifications for the DDR SDRAM when V_{DDDDR} (typ) = 1.5 V.

Table 19. DDR3 SDRAM Input AC Timing Specifications for 1.5 V Interface

Parameter	Symbol	Min	Max	Unit
AC input low voltage	V_{IL}	—	MV_{REF} – 0.175	V
AC input high voltage	V_{IH}	MV_{REF} + 0.175	—	V
Note: At recommended operating conditions with V_{DDDDR} of 1.5 ± 5%.				

Table 20 provides the input AC timing specifications for the DDR SDRAM interface.

Table 20. DDR SDRAM Input AC Timing Specifications

Parameter	Symbol	Min	Max	Unit	Notes
Controller Skew for MDQS—MDQ/MECC/MDM • 800 MHz data rate • 667 MHz data rate	t_{CISKEW}	 –200 –240	 200 240	 ps ps	1, 2
Tolerated Skew for MDQS—MDQ/MECC/MDM • 800 MHz data rate • 667 MHz data rate	t_{DISKEW}	 –425 –510	 425 510	 ps ps	2, 3

Notes:
1. t_{CISKEW} represents the total amount of skew consumed by the controller between MDQS[n] and any corresponding bit that is captured with MDQS[n]. Subtract this value from the total timing budget.
2. At recommended operating conditions with V_{DDDDR} (1.8 V or 1.5 V) ± 5%
3. The amount of skew that can be tolerated from MDQS to a corresponding MDQ signal is called t_{DISKEW}.This can be determined by the following equation: $t_{DISKEW} = \pm(T \div 4 - abs(t_{CISKEW}))$ where T is the clock period and $abs(t_{CISKEW})$ is the absolute value of t_{CISKEW}.

Downloaded from Arrow.com.

Figure 11 shows the DDR2 and DDR3 SDRAM interface input timing diagram.

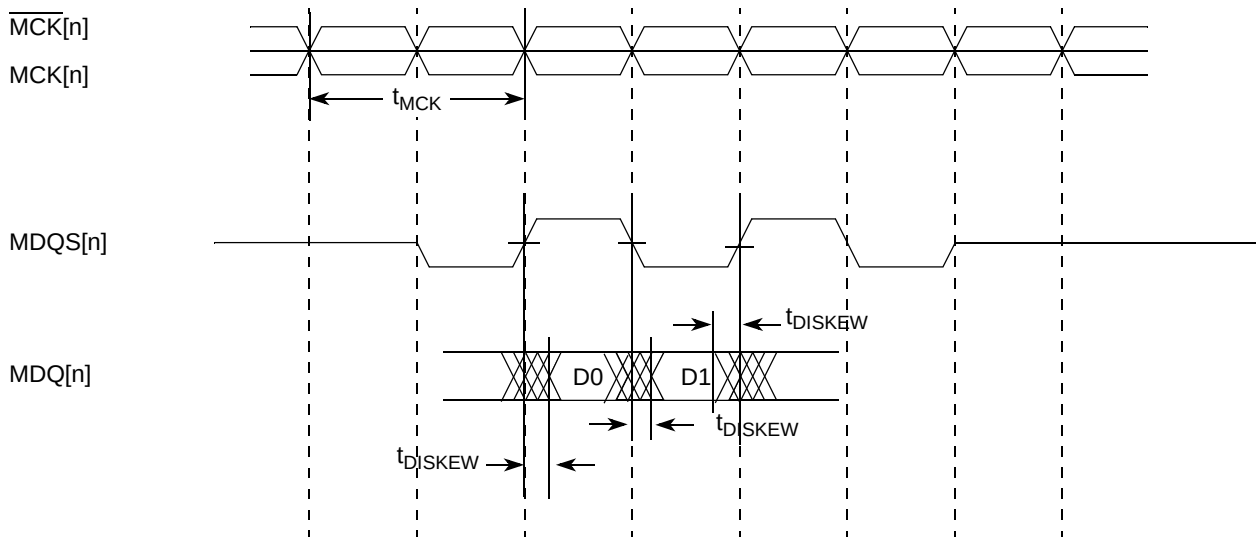

Figure 11. DDR2 and DDR3 SDRAM Interface Input Timing Diagram

2.6.1.2 DDR SDRAM Output AC Timing Specifications

Table 21 provides the output AC timing specifications for the DDR SDRAM interface.

Table 21. DDR SDRAM Output AC Timing Specifications

Parameter	Symbol [1]	Min	Max	Unit	Notes
MCK[n] cycle time	t_{MCK}	2.5	5	ns	2
ADDR/CMD output setup with respect to MCK • 800 MHz data rate • 667 MHz data rate	t_{DDKHAS}	 0.917 1.10	 — —	 ns ns	3
ADDR/CMD output hold with respect to MCK • 800 MHz data rate • 667 MHz data rate	t_{DDKHAX}	 0.767 1.02	 — —	 ns ns	3
$\overline{\text{MCS}}$n output setup with respect to MCK • 800 MHz data rate • 667 MHz data rate	t_{DDKHCS}	 0.917 1.10	 — —	 ns ns	3
$\overline{\text{MCS}}$n output hold with respect to MCK • 800 MHz data rate • 667 MHz data rate	t_{DDKHCX}	 0.767 1.02	 — —	 ns ns	3
MCK to MDQS Skew • 800 MHz data rate • 667 MHz data rate	t_{DDKHMH}	 –0.4 –0.6	 0.375 0.6	ns	4
MDQ/MECC/MDM output setup with respect to MDQS • 800 MHz • 667 MHz	t_{DDKHDS}, t_{DDKLDS}	 300 375	 — —	 ps ps	5
MDQ/MECC/MDM output hold with respect to MDQS • 800 MHz • 667 MHz	t_{DDKHDX}, t_{DDKLDX}	 300 375	 — —	 ps ps	5
MDQS preamble	t_{DDKHMP}	$-0.9 \times t_{MCK}$	—	ns	—
MDQS postamble	t_{DDKHME}	$-0.4 \times t_{MCK}$	$-0.6 \times t_{MCK}$	ns	—

Downloaded from Arrow.com.

Table 21. DDR SDRAM Output AC Timing Specifications (continued)

Parameter	Symbol [1]	Min	Max	Unit	Notes

Notes:

1. The symbols used for timing specifications follow the pattern of $t_{\text{(first two letters of functional block)(signal)(state) (reference)(state)}}$ for inputs and $t_{\text{(first two letters of functional block)(reference)(state)(signal)(state)}}$ for outputs. Output hold time can be read as DDR timing (DD) from the rising or falling edge of the reference clock (KH or KL) until the output went invalid (AX or DX). For example, t_{DDKHAS} symbolizes DDR timing (DD) for the time t_{MCK} memory clock reference (K) goes from the high (H) state until outputs (A) are setup (S) or output valid time. Also, t_{DDKLDX} symbolizes DDR timing (DD) for the time t_{MCK} memory clock reference (K) goes low (L) until data outputs (D) are invalid (X) or data output hold time.
2. All MCK/$\overline{\text{MCK}}$ referenced measurements are made from the crossing of the two signals.
3. ADDR/CMD includes all DDR SDRAM output signals except MCK/$\overline{\text{MCK}}$, $\overline{\text{MCS}}$, and MDQ/MECC/MDM/MDQS.
4. Note that t_{DDKHMH} follows the symbol conventions described in note 1. For example, t_{DDKHMH} describes the DDR timing (DD) from the rising edge of the MCK(n) clock (KH) until the MDQS signal is valid (MH). t_{DDKHMH} can be modified through control of the DQSS override bits in the TIMING_CFG_2 register. This will typically be set to the same delay as the clock adjust in the CLK_CNTL register. The timing parameters listed in the table assume that these two parameters have been set to the same adjustment value. See the *MSC8251 Reference Manual* for a description and understanding of the timing modifications enabled by use of these bits.
5. Determined by maximum possible skew between a data strobe (MDQS) and any corresponding bit of data (MDQ), ECC (MECC), or data mask (MDM). The data strobe should be centered inside of the data eye at the pins of the MSC8251.
6. At recommended operating conditions with V_{DDDDR} (1.5 V or 1,8 V) ± 5%.

Note: For the ADDR/CMD setup and hold specifications in Table 21, it is assumed that the clock control register is set to adjust the memory clocks by ½ applied cycle.

Figure 12 shows the DDR SDRAM output timing for the MCK to MDQS skew measurement (t_{DDKHMH}).

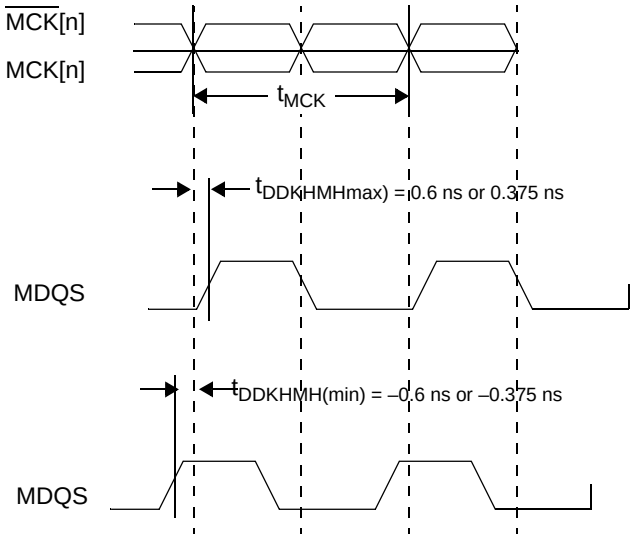

Figure 12. MCK to MDQS Timing

Downloaded from Arrow.com.

Figure 13 shows the DDR SDRAM output timing diagram.

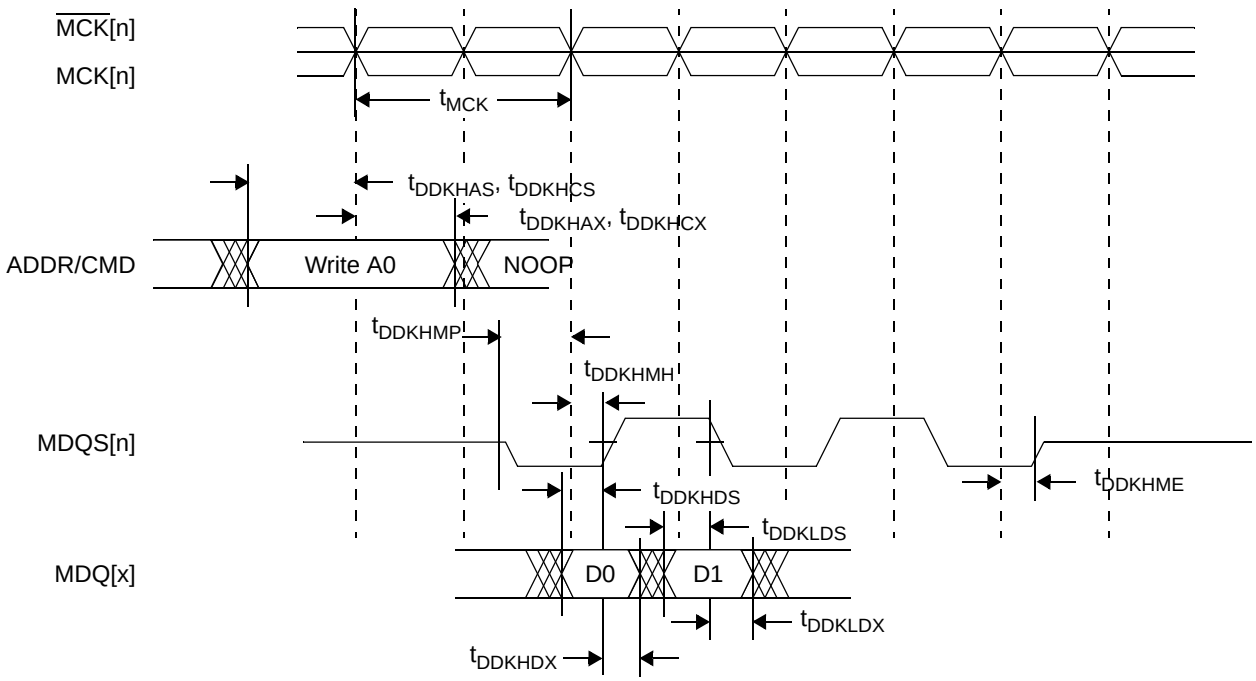

Figure 13. DDR SDRAM Output Timing

Figure 14 provides the AC test load for the DDR2 and DDR3 controller bus.

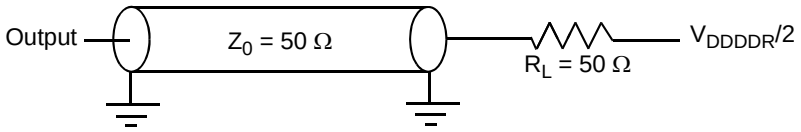

Figure 14. DDR2 and DDR3 Controller Bus AC Test Load

2.6.1.3 DDR2 and DDR3 SDRAM Differential Timing Specifications

This section describes the DC and AC differential timing specifications for the DDR2 and DDR3 SDRAM controller interface. Figure 15 shows the differential timing specification.

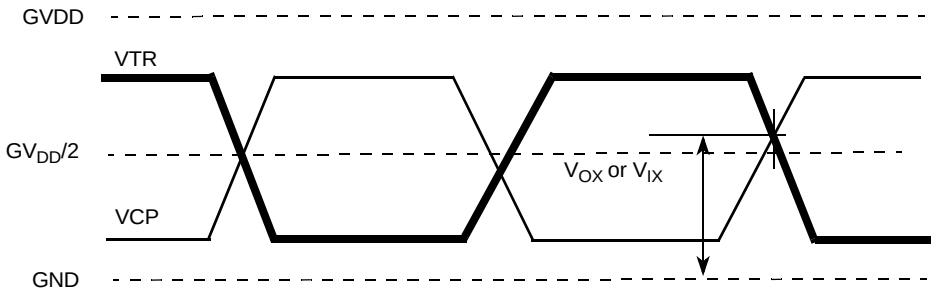

Figure 15. DDR2 and DDR3 SDRAM Differential Timing Specifications

Note: VTR specifies the true input signal (such as MCK or MDQS) and VCP is the complementary input signal (such as $\overline{\text{MCK}}$ or $\overline{\text{MDQS}}$).

Downloaded from Arrow.com.

Table 22 provides the DDR2 differential specifications for the differential signals MDQS/$\overline{\text{MDQS}}$ and MCK/$\overline{\text{MCK}}$.

Table 22. DDR2 SDRAM Differential Electrical Characteristics

Parameter	Symbol	Min	Max	Unit
Input AC differential cross-point voltage	V_{IXAC}	0.5 × GVDD – 0.175	0.5 × GVDD + 0.175	V
Output AC differential cross-point voltage	V_{OXAC}	0.5 × GVDD – 0.125	0.5 × GVDD + 0.125	V

Table 23 provides the DDR3 differential specifications for the differential signals MDQS/$\overline{\text{MDQS}}$ and MCK/$\overline{\text{MCK}}$.

Table 23. DDR3 SDRAM Differential Electrical Characteristics

Parameter	Symbol	Min	Max	Unit
Input AC differential cross-point voltage	V_{IXAC}	0.5 × GVDD – 0.150	0.5 × GVDD + 0.150	V
Output AC differential cross-point voltage	V_{OXAC}	0.5 × GVDD – 0.115	0.5 × GVDD + 0.115	V

2.6.2 HSSI AC Timing Specifications

The following subsections define the AC timing requirements for the SerDes reference clocks, the PCI Express data lines, the Serial RapidIO data lines, and the SGMII data lines.

2.6.2.1 AC Requirements for SerDes Reference Clock

Table 24 lists AC requirements for the SerDes reference clocks.

Note: Specifications are valid at the recommended operating conditions listed in Table 3.

Table 24. SR[1–2]_REF_CLK and $\overline{\text{SR[1–2]_REF_CLK}}$ Input Clock Requirements

Parameter	Symbol	Min	Typical	Max	Units	Notes
SR[1–2]_REF_CLK/$\overline{\text{SR[1–2]_REF_CLK}}$ frequency range	t_{CLK_REF}	—	100/125	—	MHz	1
SR[1–2]_REF_CLK/$\overline{\text{SR[1–2]_REF_CLK}}$ clock frequency tolerance	t_{CLK_TOL}	–350	—	350	ppm	—
SR[1–2]_REF_CLK/$\overline{\text{SR[1–2]_REF_CLK}}$ reference clock duty cycle (measured at 1.6 V)	t_{CLK_DUTY}	40	50	60	%	—
SR[1–2]_REF_CLK/$\overline{\text{SR[1–2]_REF_CLK}}$ max deterministic peak-peak jitter at 10^{-6} BER	t_{CLK_DJ}	—	—	42	ps	—
SR[1–2]_REF_CLK/$\overline{\text{SR[1–2]_REF_CLK}}$ total reference clock jitter at 10^{-6} BER (peak-to-peak jitter at ref_clk input)	t_{CLK_TJ}	—	—	86	ps	2
SR[1–2]_REF_CLK/$\overline{\text{SR[1–2]_REF_CLK}}$ rising/falling edge rate	t_{CLKRR}/t_{CLKFR}	1	—	4	V/ns	3
Differential input high voltage	V_{IH}	200	—	—	mV	4
Differential input low voltage	V_{IL}	—	—	–200	mV	4
Rising edge rate (SR[1–2]_REF_CLK) to falling edge rate (SR[1–2]_REF_CLK) matching	Rise-Fall Matching	—	—	20	%	5, 6

Downloaded from Arrow.com.

Table 24. SR[1–2]_REF_CLK and $\overline{\text{SR[1–2]_REF_CLK}}$ Input Clock Requirements (continued)

Parameter	Symbol	Min	Typical	Max	Units	Notes

Notes:
1. Caution: Only 100 and 125 have been tested. Other values will not work correctly with the rest of the system.
2. Limits from PCI Express CEM Rev 1.0a
3. Measured from –200 mV to +200 mV on the differential waveform (derived from SR[1–2]_REF_CLK minus $\overline{\text{SR[1–2]_REF_CLK}}$). The signal must be monotonic through the measurement region for rise and fall time. The 400 mV measurement window is centered on the differential zero crossing. See Figure 16.
4. Measurement taken from differential waveform
5. Measurement taken from single-ended waveform
6. Matching applies to rising edge for SR[1–2]_REF_CLK and falling edge rate for $\overline{\text{SR[1–2]_REF_CLK}}$. It is measured using a 200 mV window centered on the median cross point where SR[1–2]_REF_CLK rising meets $\overline{\text{SR[1–2]_REF_CLK}}$ falling. The median cross point is used to calculate the voltage thresholds that the oscilloscope uses for the edge rate calculations. The rise edge rate of SR[1–2]_REF_CLK should be compared to the fall edge rate of $\overline{\text{SR[1–2]_REF_CLK}}$; the maximum allowed difference should not exceed 20% of the slowest edge rate. See Figure 17.

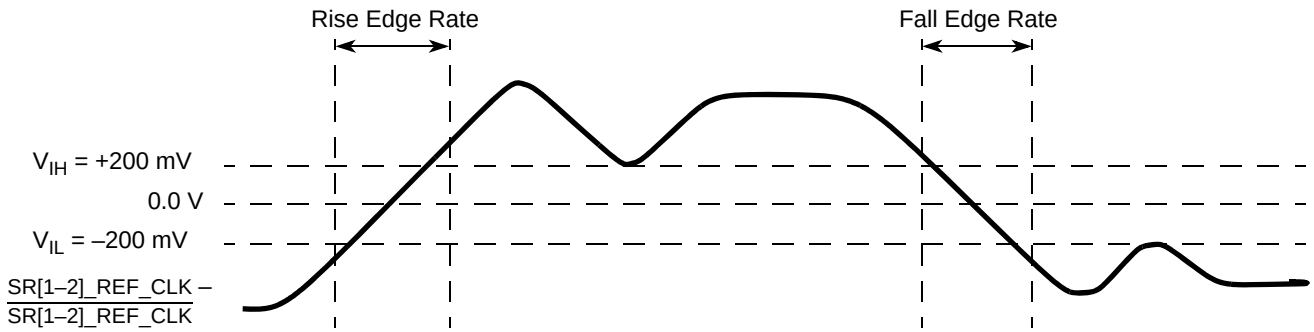

Figure 16. Differential Measurement Points for Rise and Fall Time

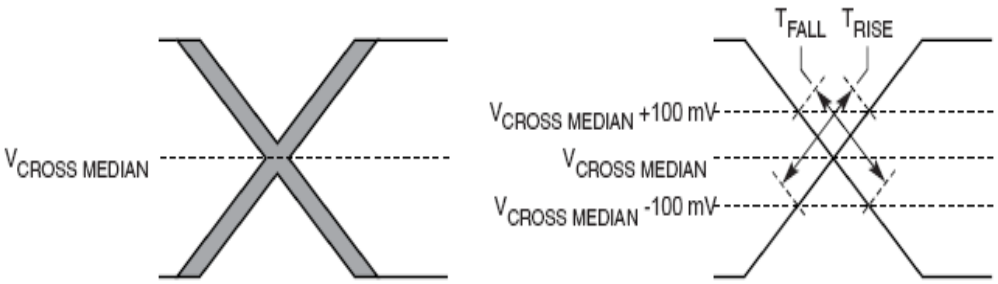

Figure 17. Single-Ended Measurement Points for Rise and Fall Time Matching

Downloaded from Arrow.com.

2.6.2.2 PCI Express AC Physical Layer Specifications

The AC requirements for PCI Express implementations have separate requirements for the Tx and Rx lines. The MSC8251 supports a 2.5 Gbps PCI Express interface defined by the *PCI Express Base Specification, Revision 1.0a*. The transmitter specifications are defined in Table 25 and the receiver specifications are defined in Table 26. The parameters are specified at the component pins. the AC timing specifications do not include REF_CLK jitter.

Note: Specifications are valid at the recommended operating conditions listed in Table 3.

Table 25. PCI Express (2.5 Gbps) Differential Transmitter (Tx) Output AC Specifications

Parameter	Symbol	Min	Typical	Max	Units	Notes
Unit interval	UI	399.88	400.00	400.12	ps	1
Minimum Tx eye width	$T_{TX\text{-}EYE}$	0.70	—	—	UI	2, 3
Maximum time between the jitter median and maximum deviation from the median.	$T_{TX\text{-}EYE\text{-}MEDIAN\text{-}to\text{-}MAX\text{-}JITTER}$	—	—	0.15	UI	3, 4
AC coupling capacitor	C_{TX}	75	—	200	nF	5

Notes:
1. Each UI is 400 ps ± 300 ppm. UI does not account for spread spectrum clock dictated variations. No test load is necessarily associated with this value.
2. The maximum transmitter jitter can be derived as $T_{TX\text{-}MAX\text{-}JITTER} = 1 - T_{TX\text{-}EYE} = 0.3$ UI.
3. Specified at the measurement point into a timing and voltage compliance test load as shown in Figure 8 and measured over any 250 consecutive Tx UIs. A $T_{TX\text{-}EYE} = 0.70$ UI provides for a total sum of deterministic and random jitter budget of $T_{TX\text{-}JITTER\text{-}MAX} = 0.30$ UI for the transmitter collected over any 250 consecutive Tx UIs. The $T_{TX\text{-}EYE\text{-}MEDIAN\text{-}to\text{-}MAX\text{-}JITTER}$ median is less than half of the total Tx jitter budget collected over any 250 consecutive Tx UIs. It should be noted that the median is not the same as the mean. The jitter median describes the point in time where the number of jitter points on either side is approximately equal as opposed to the averaged time value. Jitter is defined as the measurement variation of the crossing points ($V_{TX\text{-}DIFFp\text{-}p} = 0$ V) in relation to a recovered Tx UI. A recovered Tx UI is calculated over 3500 consecutive unit intervals of sample data.
4. Jitter is measured using all edges of the 250 consecutive UI in the center of the 3500 UI used for calculating the Tx UI.
5. All transmitters shall be AC-coupled. The AC coupling is required either within the media or within the transmitting component itself. The SerDes transmitter does not have built-in Tx capacitance. An external AC coupling capacitor is required.

Table 26. PCI Express (2.5 Gbps) Differential Receiver (Rx) Input AC Specifications

Parameter	Symbol	Min	Typical	Max	Units	Notes
Unit Interval	UI	399.88	400.00	400.12	ps	1
Minimum receiver eye width	$T_{RX\text{-}EYE}$	0.4	—	—	UI	2, 3, 4
Maximum time between the jitter median and maximum deviation from the median.	$T_{RX\text{-}EYE\text{-}MEDIAN\text{-}to\text{-}MAX\text{-}JITTER}$	—	—	0.3	UI	3, 4, 5

Notes:
1. Each UI is 400 ps ± 300 ppm. UI does not account for spread spectrum clock dictated variations. No test load is necessarily associated with this value.
2. The maximum interconnect media and transmitter jitter that can be tolerated by the receiver can be derived as $T_{RX\text{-}MAX\text{-}JITTER} = 1 - T_{RX\text{-}EYE} = 0.6$ UI.
3. Specified at the measurement point and measured over any 250 consecutive UIs. The test load in Figure 8 should be used as the Rx device when taking measurements. If the clocks to the Rx and Tx are not derived from the same reference clock, the Tx UI recovered from 3500 consecutive UI must be used as a reference for the eye diagram.
4. A $T_{RX\text{-}EYE} = 0.40$ UI provides for a total sum of 0.60 UI deterministic and random jitter budget for the transmitter and interconnect collected any 250 consecutive UIs. The $T_{RX\text{-}EYE\text{-}MEDIAN\text{-}to\text{-}MAX\text{-}JITTER}$ specification ensures a jitter distribution in which the median and the maximum deviation from the median is less than half of the total. UI jitter budget collected over any 250 consecutive Tx UIs. It should be noted that the median is not the same as the mean. The jitter median describes the point in time where the number of jitter points on either side is approximately equal as opposed to the averaged time value. If the clocks to the Rx and Tx are not derived from the same reference clock, the Tx UI recovered from 3500 consecutive UI must be used as the reference for the eye diagram.
5. Jitter is defined as the measurement variation of the crossing points ($V_{RX\text{-}DIFFp\text{-}p} = 0$ V) in relation to a recovered Tx UI. A recovered Tx UI is calculated over 3500 consecutive unit intervals of sample data. Jitter is measured using all edges of the 250 consecutive UI in the center of the 3500 UI used for calculating the Tx UI. It is recommended that the recovered Tx UI is calculated using all edges in the 3500 consecutive UI interval with a fit algorithm using a minimization merit function. Least squares and median deviation fits have worked well with experimental and simulated data.

Downloaded from Arrow.com.

2.6.2.3 Serial RapidIO AC Timing Specifications

Note: Specifications are valid at the recommended operating conditions listed in Table 3.

Table 27 defines the transmitter AC specifications for the Serial RapidIO interface. The AC timing specifications do not include REF_CLK jitter.

Table 27. Serial RapidIO Transmitter AC Timing Specifications

Characteristic	Symbol	Min	Typical	Max	Unit
Deterministic Jitter	J_D	—	—	0.17	UI p-p
Total Jitter	J_T	—	—	0.35	UI p-p
Unit Interval: 1.25 GBaud	UI	800 – 100ppm	800	800 + 100ppm	ps
Unit Interval: 2.5 GBaud	UI	400 – 100ppm	400	400 + 100ppm	ps
Unit Interval: 3.125 GBaud	UI	320 – 100ppm	320	320 + 100ppm	ps

Table 28 defines the Receiver AC specifications for the Serial RapidIO interface. The AC timing specifications do not include REF_CLK jitter.

Table 28. Serial RapidIO Receiver AC Timing Specifications

Characteristic	Symbol	Min	Typical	Max	Unit	Notes
Deterministic Jitter Tolerance	J_D	0.37	—	—	UI p-p	1
Combined Deterministic and Random Jitter Tolerance	J_{DR}	0.55	—	—	UI p-p	1
Total Jitter Tolerance	J_T	0.65	—	—	UI p-p	1, 2
Bit Error Rate	BER	—	—	10^{-12}	—	—
Unit Interval: 1.25 GBaud	UI	800 – 100ppm	800	800 + 100ppm	ps	—
Unit Interval: 2.5 GBaud	UI	400 – 100ppm	400	400 + 100ppm	ps	—
Unit Interval: 3.125 GBaud	UI	320 – 100ppm	320	320 + 100ppm	ps	—

Notes:
1. Measured at receiver.
2. Total jitter is composed of three components, deterministic jitter, random jitter, and single frequency sinusoidal jitter. The sinusoidal jitter may have any amplitude and frequency in the unshaded region of Figure 18. The sinusoidal jitter component is included to ensure margin for low frequency jitter, wander, noise, crosstalk, and other variable system effects.

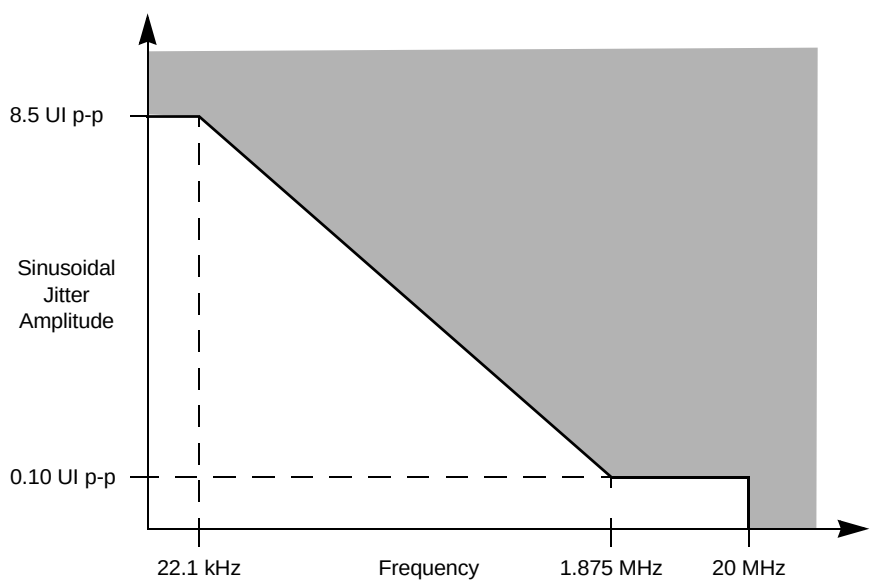

Figure 18. Single Frequency Sinusoidal Jitter Limits

Downloaded from Arrow.com.

2.6.2.4 SGMII AC Timing Specifications

Note: Specifications are valid at the recommended operating conditions listed in Table 3.

Transmitter and receiver AC characteristics are measured at the transmitter outputs (SR[1–2]_TX[n] and $\overline{\text{SR[1–2]_TX}}$[n]) or at the receiver inputs (SR[1–2]_RX[n] and $\overline{\text{SR[1–2]_RX}}$[n]) as depicted in Figure 19, respectively.

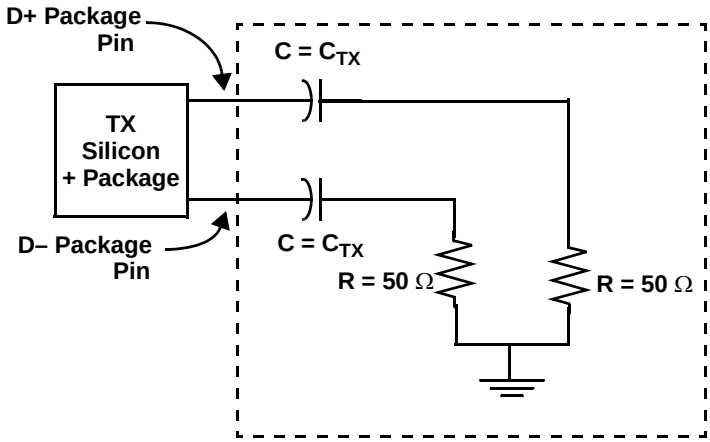

Figure 19. SGMII AC Test/Measurement Load

Table 29 provides the SGMII transmit AC timing specifications. A source synchronous clock is not supported. The AC timing specifications do not include REF_CLK jitter.

Table 29. SGMII Transmit AC Timing Specifications

Parameter	Symbol	Min	Typ	Max	Unit	Notes
Deterministic Jitter	JD	—	—	0.17	UI p-p	—
Total Jitter	JT	—	—	0.35	UI p-p	2
Unit Interval	UI	799.92	800	800.08	ps	1

Notes:
1. See Figure 18 for single frequency sinusoidal jitter limits
2. Each UI is 800 ps ± 100 ppm.

Table 30 provides the SGMII receiver AC timing specifications. The AC timing specifications do not include REF_CLK jitter.

Table 30. SGMII Receive AC Timing Specifications

Parameter	Symbol	Min	Typ	Max	Unit	Notes
Deterministic Jitter Tolerance	JD	0.37	—	—	UI p-p	1, 2
Combined Deterministic and Random Jitter Tolerance	JDR	0.55	—	—	UI p-p	1, 2
Total Jitter Tolerance	JT	0.65	—	—	UI p-p	1,2
Bit Error Ratio	BER	—	—	10^{-12}	—	—
Unit Interval	UI	799.92	800.00	800.08	ps	3

Notes:
1. Measured at receiver.
2. Refer to RapidIO™ 1x/4x LP Serial Physical Layer Specification for interpretation of jitter specifications. Also see Figure 18.
3. Each UI is 800 ps ± 100 ppm.

Downloaded from Arrow.com.

2.6.3 TDM Timing

Table 31 provides the input and output AC timing specifications for the TDM interface.

Table 31. TDM AC Timing Specifications for 62.5 MHz[1]

Parameter	Symbol[2]	Min	Max	Unit
TDMxRCK/TDMxTCK	t_{DM}	16.0	—	ns
TDMxRCK/TDMxTCK high pulse width	t_{DM_HIGH}	7.0	—	ns
TDMxRCK/TDMxTCK low pulse width	t_{DM_LOW}	7.0	—	ns
TDM all input setup time	t_{DMIVKH}	3.6	—	ns
TDMxRD hold time	$t_{DMRDIXKH}$	1.9	—	ns
TDMxTFS/TDMxRFS input hold time	$t_{DMFSIXKH}$	1.9	—	ns
TDMxTCK High to TDMxTD output active	t_{DM_OUTAC}	2.5	—	ns
TDMxTCK High to TDMxTD output valid	$t_{DMTKHOV}$	—	9.8	ns
TDMxTD hold time	$t_{DMTKHOX}$	2.5	—	ns
TDMxTCK High to TDMxTD output high impedance	t_{DM_OUTHI}	—	9.8	ns
TDMxTFS/TDMxRFS output valid	$t_{DMFSKHOV}$	—	9.25	ns
TDMxTFS/TDMxRFS output hold time	$t_{DMFSKHOX}$	2.0	—	ns

Notes:
1. The symbols used for timing specifications follow the pattern $t_{\text{(first two letters of functional block)(signal)(state)(reference)(state)}}$ for inputs and $t_{\text{(first two letters of functional block)(reference)(state)(signal)(state)}}$ for outputs. For example, t_{HIKHOX} symbolizes the output internal timing (HI) for the time t_{serial} memory clock reference (K) goes from the high state (H) until outputs (O) are invalid (X).
2. Output values are based on 30 pF capacitive load.
3. Inputs are referenced to the sampling that the TDM is programmed to use. Outputs are referenced to the programming edge they are programmed to use. Use of the rising edge or falling edge as a reference is programmable. T_{DMxTCK} and T_{DMxRCK} are shown using the rising edge.
4. All values are based on a maximum TDM interface frequency of 62.5 MHz.

Figure 20 shows the TDM receive signal timing.

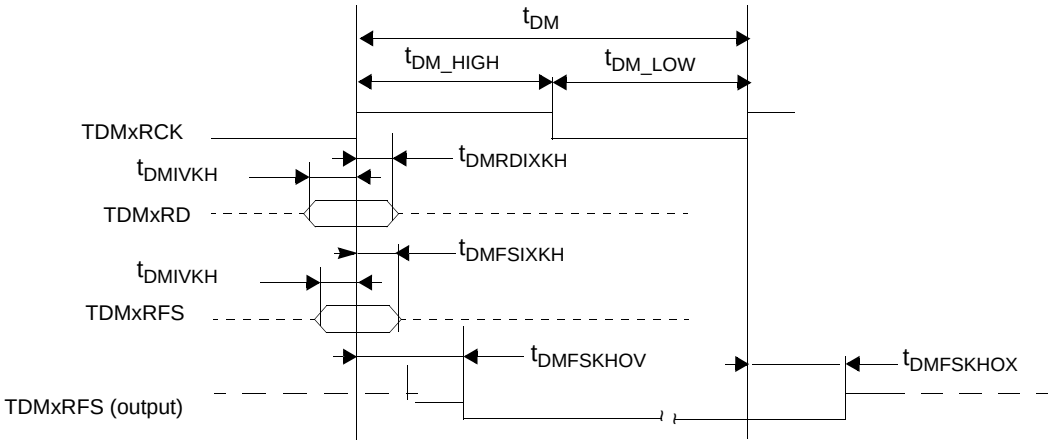

Figure 20. TDM Receive Signals

Downloaded from Arrow.com.

Figure 21 shows the TDM transmit signal timing.

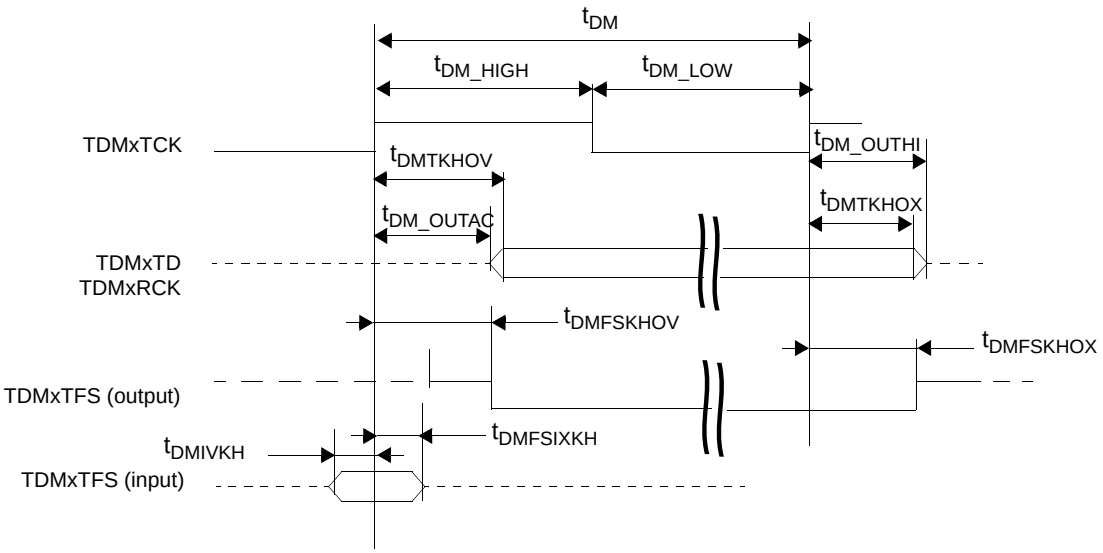

Figure 21. TDM Transmit Signals

Figure 22 provides the AC test load for the TDM/SI.

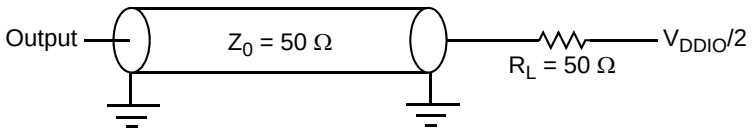

Figure 22. TDM AC Test Load

2.6.4 Timers AC Timing Specifications

Table 32 lists the timer input AC timing specifications.

Table 32. Timers Input AC Timing Specifications

Characteristics	Symbol	Minimum	Unit	Notes
Timers inputs—minimum pulse width	T_{TIWID}	8	ns	1, 2

Notes:
1. The maximum allowed frequency of timer outputs is 125 MHz. Configure the timer modules appropriately.
2. Timer inputs and outputs are asynchronous to any visible clock. Timer outputs should be synchronized before use by any external synchronous logic. Timer inputs are required to be valid for at least t_{TIWID} ns to ensure proper operation.

Note: For recommended operating conditions, see Table 3.

Figure 23 shows the AC test load for the timers.

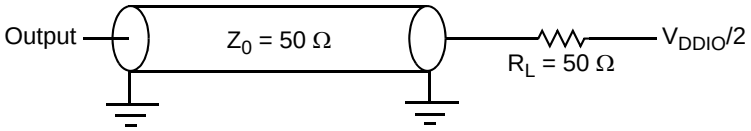

Figure 23. Timer AC Test Load

Downloaded from Arrow.com.

2.6.5 Ethernet Timing

This section describes the AC electrical characteristics for the Ethernet interface.

There are programmable delay units (PDU) that should be programmed differently for each interface to meet timing. There is a general configuration register 4 (GCR4) used to configure the timing. For additional information, see the *MSC8251 Reference Manual*.

2.6.5.1 Management Interface Timing

Table 33 lists the timer input Ethernet controller management interface timing specifications shown in Figure 24.

Table 33. Ethernet Controller Management Interface Timing

Characteristics	Symbol	Min	Max	Unit
GE_MDC frequency	f_{MDC}	—	2.5	MHz
GE_MDC period	t_{MDC}	400	—	ns
GE_MDC clock pulse width high	t_{MDC_H}	160	—	ns
GE_MDC clock pulse width low	t_{MDC_L}	160	—	ns
GE_MDC to GE_MDIO delay[2]	t_{MDKHDX}	10	70	ns
GE_MDIO to GE_MDC rising edge setup time	t_{MDDVKH}	20	—	ns
GE_MDC rising edge to GE_MDIO hold time	t_{MDDXKH}	0	—	ns

Notes:
1. Program the GE_MDC frequency (f_{MDC}) to a maximum value of 2.5 MHz (400 ns period for t_{MDC}). The value depends on the source clock and configuration of MIIMCFG[MCS] and UPSMR[MDCP]. For example, for a source clock of 400 MHz to achieve f_{MDC} = 2.5 MHz, program MIIMCFG[MCS] = 0x4 and UPSMR[MDCP] = 0. See the *MSC8251 Reference Manual* for configuration details.
2. The value depends on the source clock. For example, for a source clock of 267 MHz, the delay is 70 ns. For a source clock of 333 MHz, the delay is 58 ns.

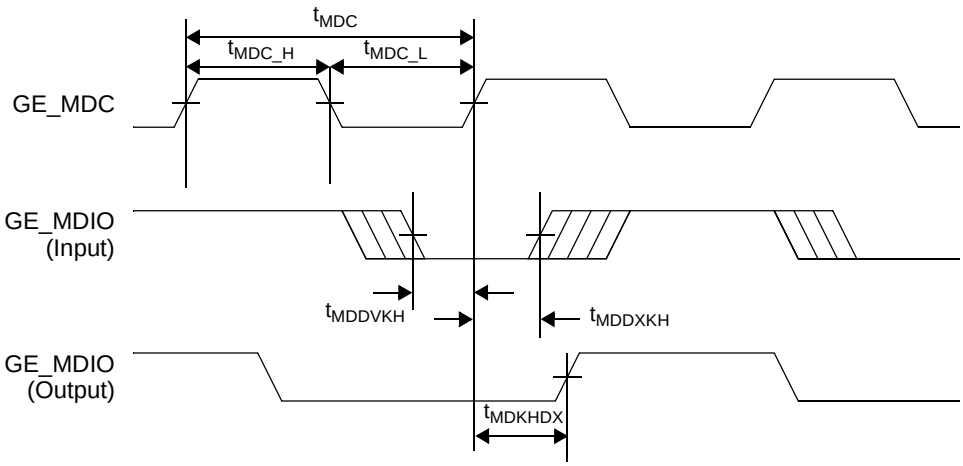

Figure 24. MII Management Interface Timing

Downloaded from Arrow.com.

2.6.5.2 RGMII AC Timing Specifications

Table 34 presents the RGMII AC timing specifications for applications requiring an on-board delayed clock.

Table 34. RGMII at 1 Gbps[2] with On-Board Delay[3] AC Timing Specifications

Parameter/Condition	Symbol	Min	Typ	Max	Unit
Data to clock output skew (at transmitter)[4]	t_{SKEWT}	–0.5	—	0.5	ns
Data to clock input skew (at receiver) [4]	t_{SKEWR}	1	—	2.6	ns

Notes:
1. At recommended operating conditions with V_{DDIO} of 2.5 V ± 5%.
2. RGMII at 100 Mbps support is guaranteed by design.
3. Program GCR4 as 0x00000000.
4. This implies that PC board design requires clocks to be routed such that an additional trace delay of greater than 1.5 ns and less than 2.0 ns is added to the associated clock signal.

Table 35 presents the RGMII AC timing specification for applications required non-delayed clock on board.

Table 35. RGMII at 1 Gbps[2] with No On-Board Delay[3] AC Timing Specifications

Parameter/Condition	Symbol	Min	Typ	Max	Unit
Data to clock output skew (at transmitter)[4]	t_{SKEWT}	–2.6	—	–1.0	ns
Data to clock input skew (at receiver)[4]	t_{SKEWR}	–0.5	—	0.5	ns

Notes:
1. At recommended operating conditions with V_{DDIO} of 2.5 V ± 5%.
2. RGMII at 100 Mbps support is guaranteed by design.
3. GCR4 should be programmed as 0x000CC330.
4. This implies that PC board design requires clocks to be routed with no additional trace delay

Figure 25 shows the RGMII AC timing and multiplexing diagrams.

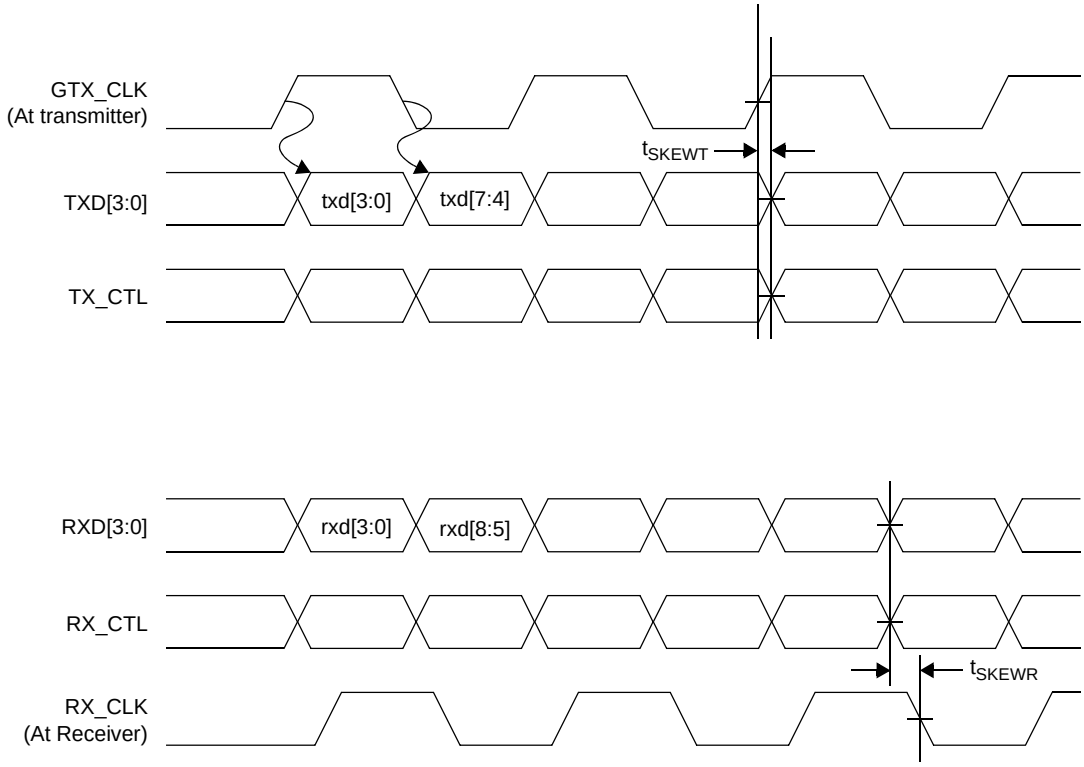

Figure 25. RGMII AC Timing and Multiplexing

Downloaded from Arrow.com.

2.6.6 SPI Timing

Table 36 lists the SPI input and output AC timing specifications.

Table 36. SPI AC Timing Specifications

Parameter	Symbol [1]	Min	Max	Unit	Note
SPI outputs valid—Master mode (internal clock) delay	t_{NIKHOV}	—	6	ns	2
SPI outputs hold—Master mode (internal clock) delay	t_{NIKHOX}	0.5	—	ns	2
SPI outputs valid—Slave mode (external clock) delay	t_{NEKHOV}	—	12	ns	2
SPI outputs hold—Slave mode (external clock) delay	t_{NEKHOX}	2	—	ns	2
SPI inputs—Master mode (internal clock) input setup time	t_{NIIVKH}	12	—	ns	—
SPI inputs—Master mode (internal clock) input hold time	t_{NIIXKH}	0	—	ns	—
SPI inputs—Slave mode (external clock) input setup time	t_{NEIVKH}	4	—	ns	—
SPI inputs—Slave mode (external clock) input hold time	t_{NEIXKH}	2	—	ns	—

Notes:
1. The symbols used for timing specifications follow the pattern of $t_{\text{(first two letters of functional block)(signal)(state)(reference)(state)}}$ for inputs and $t_{\text{(first two letters of functional block)(reference)(state)(signal)(state)}}$ for outputs. For example, t_{NIKHOX} symbolizes the internal timing (NI) for the time SPICLK clock reference (K) goes to the high state (H) until outputs (O) are invalid (X).
2. Output specifications are measured from the 50% level of the rising edge of SPICLK to the 50% level of the signal. Timings are measured at the pin.

Figure 26 provides the AC test load for the SPI.

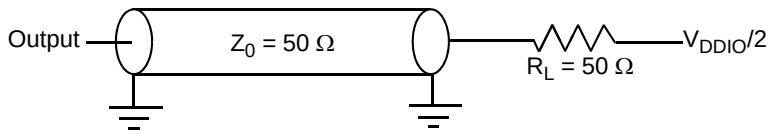

Figure 26. SPI AC Test Load

Figure 27 and Figure 28 represent the AC timings from Table 36. Note that although the specifications generally reference the rising edge of the clock, these AC timing diagrams also apply when the falling edge is the active edge.

Figure 27 shows the SPI timings in slave mode (external clock).

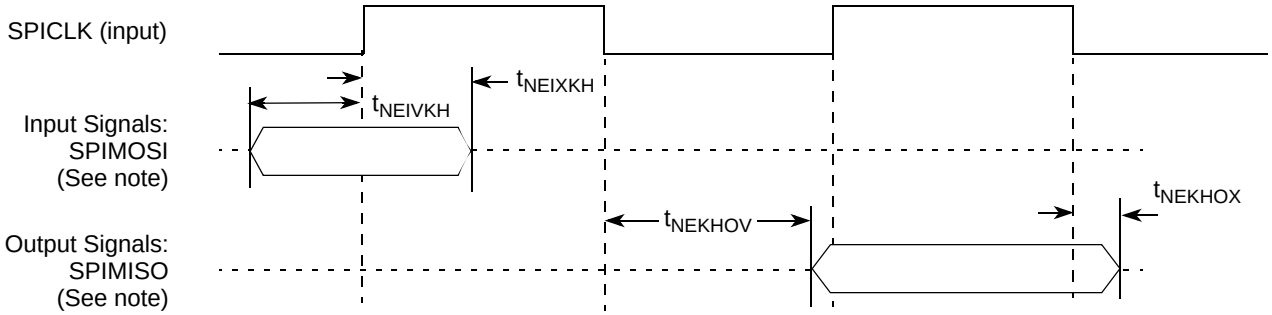

Note: measured with SPMODE[CI] = 0, SPMODE[CP] = 0

Figure 27. SPI AC Timing in Slave Mode (External Clock)

Figure 28 shows the SPI timings in master mode (internal clock).

Downloaded from Arrow.com.

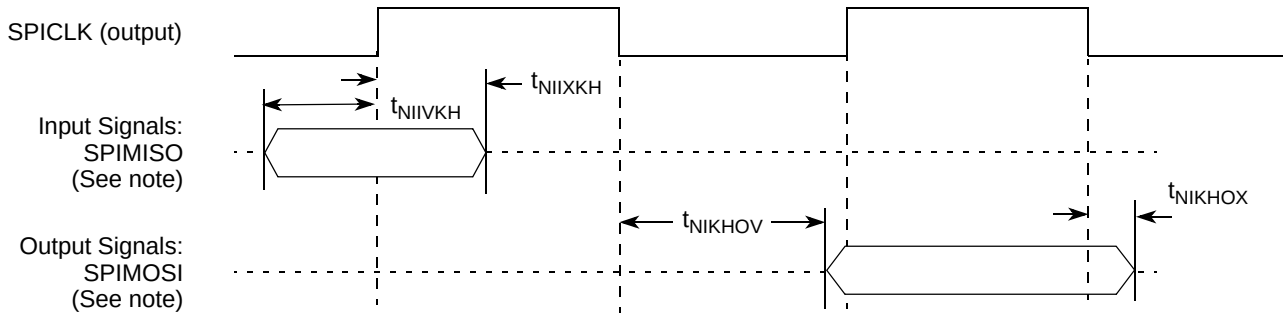

Note: measured with SPMODE[CI] = 0, SPMODE[CP] = 0

Figure 28. SPI AC Timing in Master Mode (Internal Clock)

Downloaded from Arrow.com.

2.6.7 Asynchronous Signal Timing

Table 35 lists the asynchronous signal timing specifications.

Table 37. Signal Timing

Characteristics	Symbol	Type	Min
Input	t_{IN}	Asynchronous	One CLKIN cycle
Output	t_{OUT}	Asynchronous	Application dependent
Note: Input value relevant for EE0, $\overline{\text{IRQ[15–0]}}$, and $\overline{\text{NMI}}$ only.			

The following interfaces use the specified asynchronous signals:

- *GPIO*. Signals GPIO[31–0], when used as GPIO signals, that is, when the alternate multiplexed special functions are not selected.

Note: When used as a general purpose input (GPI), the input signal should be driven until it is acknowledged by the MSC8251 device, that is, when the expected input value is read from the GPIO data register.

- *EE port*. Signals EE0, EE1.
- *Boot function*. Signal STOP_BS.
- *I^2C interface*. Signals I2C_SCL and I2C_SDA.
- *Interrupt inputs*. Signals $\overline{\text{IRQ[15–0]}}$ and $\overline{\text{NMI}}$.
- *Interrupt outputs*. Signals $\overline{\text{INT_OUT}}$ and $\overline{\text{NMI_OUT}}$ (minimum pulse width is 32 ns).

2.6.8 JTAG Signals

Table 38 lists the JTAG timing specifications shown in Figure 29 through Figure 32.

Table 38. JTAG Timing

Characteristics	Symbol	All frequencies		Unit
		Min	Max	
TCK cycle time	t_{TCKX}	36.0	—	ns
TCK clock high phase measured at $V_M = V_{DDIO}/2$	t_{TCKH}	15.0	—	ns
Boundary scan input data setup time	t_{BSVKH}	0.0	—	ns
Boundary scan input data hold time	t_{BSXKH}	15.0	—	ns
TCK fall to output data valid	t_{TCKHOV}	—	20.0	ns
TCK fall to output high impedance	t_{TCKHOZ}	—	24.0	ns
TMS, TDI data setup time	t_{TDIVKH}	0.0	—	ns
TMS, TDI data hold time	t_{TDIXKH}	5.0	—	ns
TCK fall to TDO data valid	t_{TDOHOV}	—	10.0	ns
TCK fall to TDO high impedance	t_{TDOHOZ}	—	12.0	ns
$\overline{\text{TRST}}$ assert time	t_{TRST}	100.0	—	ns
Note: All timings apply to OnCE module data transfers as well as any other transfers via the JTAG port.				

Figure 29 shows the test clock input timing diagram.

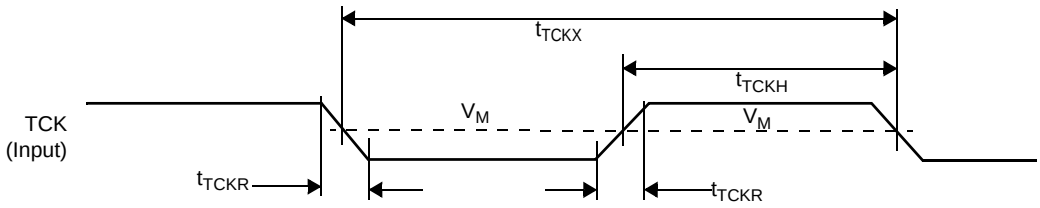

Figure 29. Test Clock Input Timing

Downloaded from Arrow.com.

Figure 30 shows the boundary scan (JTAG) timing diagram.

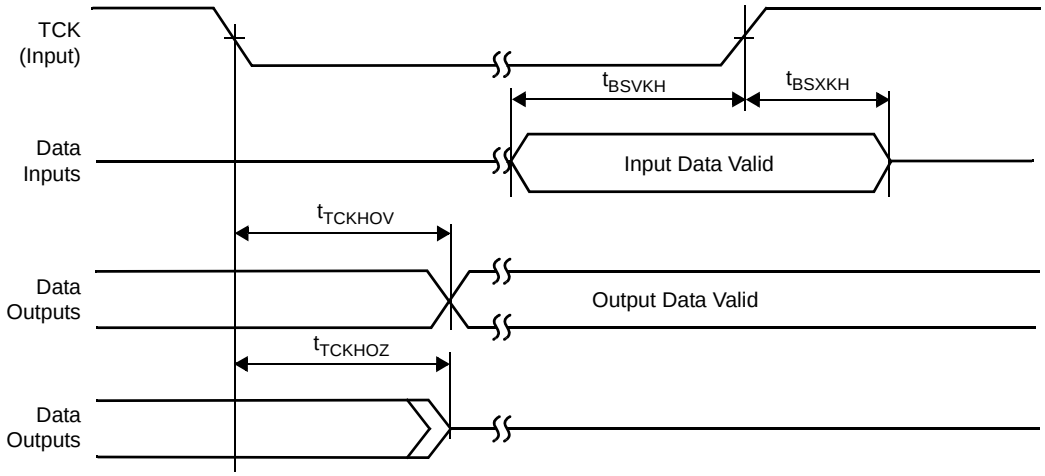

Figure 30. Boundary Scan (JTAG) Timing

Figure 31 shows the test access port timing diagram.

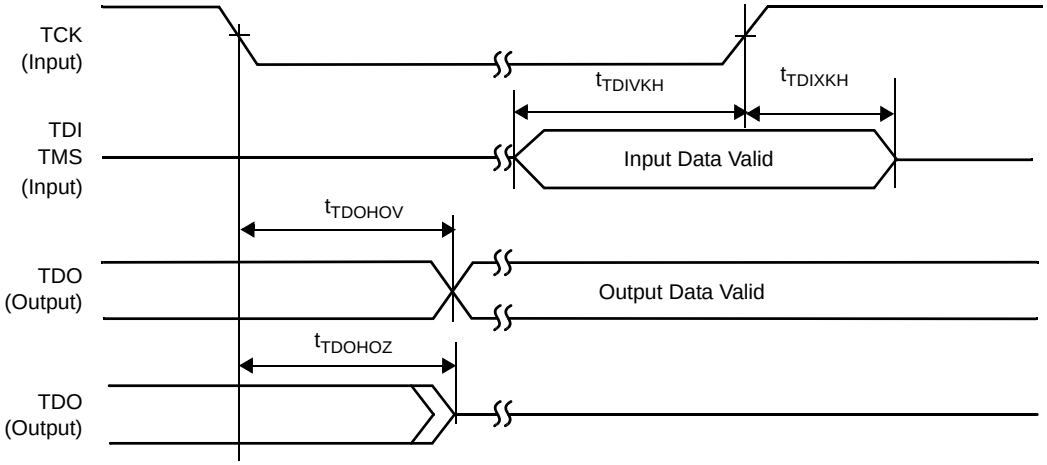

Figure 31. Test Access Port Timing

Figure 32 shows the $\overline{\text{TRST}}$ timing diagram.

Figure 32. $\overline{\text{TRST}}$ Timing

Downloaded from Arrow.com.

3 Hardware Design Considerations

The following sections discuss areas to consider when the MSC8251 device is designed into a system.

3.1 Power Supply Ramp-Up Sequence

The following subsections describe the required device initialization sequence.

3.1.1 Clock, Reset, and Supply Coordination

Starting the device requires coordination between several inputs including: clock, reset, and power supplies. follow this guidelines when starting up an MSC8251 device:

- $\overline{\text{PORESET}}$ and $\overline{\text{TRST}}$ must be asserted externally for the duration of the supply ramp-up, using the V_{DDIO} supply. $\overline{\text{TRST}}$ deassertion does not have to be synchronized with $\overline{\text{PORESET}}$ deassertion. However, $\overline{\text{TRST}}$ must be deasserted before normal operation begins to ensure correct functionality of the device.
- CLKIN should toggle at least 32 cycles before $\overline{\text{PORESET}}$ deassertion to guarantee correct device operation. The 32 cycles should only be counted from the time after V_{DDIO} reaches its nominal value (see timing 1 in Figure 33).
- CLKIN should either be stable low during ramp-up of V_{DDIO} supply (and start its swings after ramp-up) or should swing within V_{DDIO} range during V_{DDIO} ramp-up, so its amplitude grows as V_{DDIO} grows during ramp-up.

Figure 33 shows a sequence in which V_{DDIO} ramps-up after V_{DD} and CLKIN begins to toggle with the raise of V_{DDIO} supply.

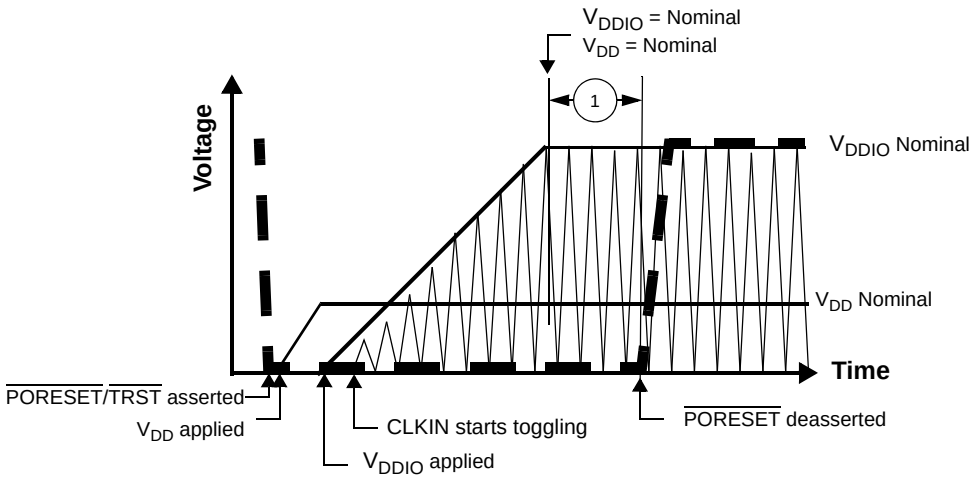

Figure 33. Supply Ramp-Up Sequence with V_{DD} Ramping Before V_{DDIO} and CLKIN Starting With V_{DDIO}

Note: For details on power-on reset flow and duration, see the *Reset* chapter in the *MSC8251 Reference Manual*.

Downloaded from Arrow.com.

3.1.2 Power-On Ramp Time

This section describes the AC electrical specification for the power-on ramp rate requirements for all voltage supplies (including GVDD/SXPVDD/SXCVDD/QVDD/GVDD/NVDD, all VDD supplies, MVREF, and all AVDD supplies). Controlling the power-on ramp time is required to avoid falsely triggering the ESD circuitry. Table 39 defines the power supply ramp time specification.

Table 39. Power Supply Ramp Rate

Parameter	Min	Max	Unit
Required ramp rate.	—	36000	V/s

Notes:
1. Ramp time is specified as a linear ramp from 10% to 90% of nominal voltage of the specific voltage supply. If the ramp is non-linear (for example, exponential), the maximum rate of change from 200 to 500 mV is the most critical because this range might falsely trigger the ESD circuitry.
2. Required over the full recommended operating temperature range (see Table 3).
3. All supplies must be at their stable values within 50 ms.
4. The GVDD pins can be held low on the application board at powerup. If GVDD is not held low, then GVDD will rise to a voltage level that depends on the board-level impedance-to-ground. If the impedance is high (that is, infinite), then theoretically, GVDD can rise up close to the VDD levels.

3.1.3 Power Supply Guidelines

Use the following guidelines for power-up sequencing:

- Couple M3VDD with the VDD power rail using an extremely low impedance path.
- Couple inputs PLL1_AVDD, PLL2_AVDD and PLL3_AVDD with the VDD power rail using an RC filter (see Figure 37).
- There is no dependency in power-on/power-off sequence between the GVDD1, GVDD2, NVDD, and QVDD power rails.
- Couple inputs M1VREF and M2VREF with the GVDD1 and GVDD2 power rails, respectively. They should rise at the same time as or after their respective power rail.
- There is no dependency between RapidIO supplies: SXCVDD1, SXCVDD2, SXPVDD1 and SXPVDD2 and other MSC8251 supplies in the power-on/power-off sequence.
- Couple inputs SR1_PLL_AVDD and SR2_PLL_AVDD with SXCVDD1 and SXCVDD2 power rails, respectively, using an RC filter (see Figure 38).

External voltage applied to any input line must not exceed the I/O supply voltage related to this line by more than 0.6 V at any time, including during power-up. Some designs require pull-up voltages applied to selected input lines during power-up for configuration purposes. This is an acceptable exception to the rule during start-up. However, each such input can draw up to 80 mA per input pin per MSC8251 device in the system during power-up. An assertion of the inputs to the high voltage level before power-up should be with slew rate less than 4 V/ns.

The device power rails should rise in the following sequence:

1. VDD (and all coupled supplies)

Downloaded from Arrow.com.

2. After the above rails rise to 90% of their nominal voltage, the following I/O power rails may rise in any sequence (see Figure 34): QVDD, NVDD, GVDD1, and GVDD2.

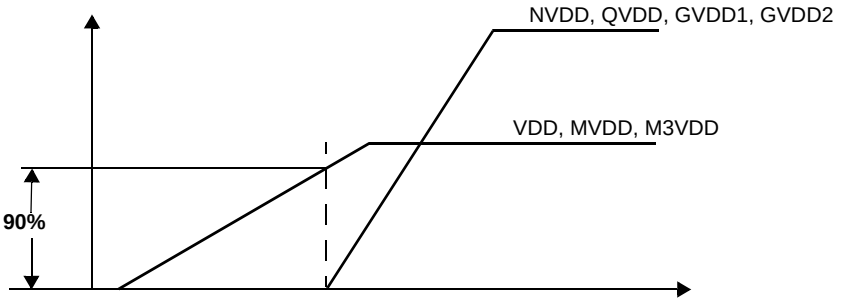

Figure 34. Supply Ramp-Up Sequence

Notes:
1. If the M3 memory is not used, M3VDD can be tied to GND.
2. If the HSSI port1 is not used, SXCVDD1and SXPVDD1 must be connected to the designated power supplies.
3. If the HSSI port2 is not used, SXCVDD2 and SXPVDD2 must be connected to the designated power supplies.
4. If the DDR port 1 interface is not used, it is recommended that GVDD1 be left unconnected.
5. If the DDR port 2 interface is not used, it is recommended that GVDD2 be left unconnected.

3.1.4 Reset Guidelines

When a debugger is not used, implement the connection scheme shown in Figure 35.

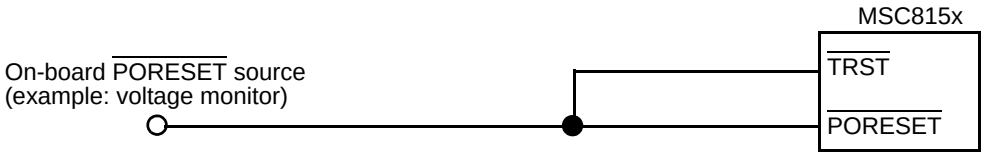

Figure 35. Reset Connection in Functional Application

When a debugger is used, implement the connection scheme shown in Figure 36.

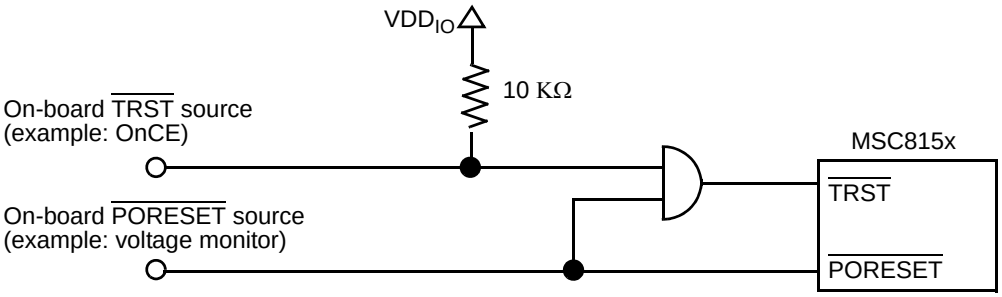

Figure 36. Reset Connection in Debugger Application

Downloaded from Arrow.com.

3.2 PLL Power Supply Design Considerations

Each global PLL power supply must have an external RC filter for the PLLn_AVDD input (see Figure 37) in which the following components are defined as listed:

- R = 5 Ω ± 5%
- C1 = 10 µF ± 10%, 0603, X5R, with ESL ≤ 0.5 nH, low ESL Surface Mount Capacitor.
- C2 = 1.0 µF ± 10%, 0402, X5R, with ESL ≤ 0.5 nH, low ESL Surface Mount Capacitor.

Note: A higher capacitance value for C2 may be used to improve the filter as long as the other C2 parameters do not change.

All three PLLs can connect to a single supply voltage source (such as a voltage regulator) as long as the external RC filter is applied to each PLL separately. For optimal noise filtering, place the circuit as close as possible to its PLLn_AVDD inputs.

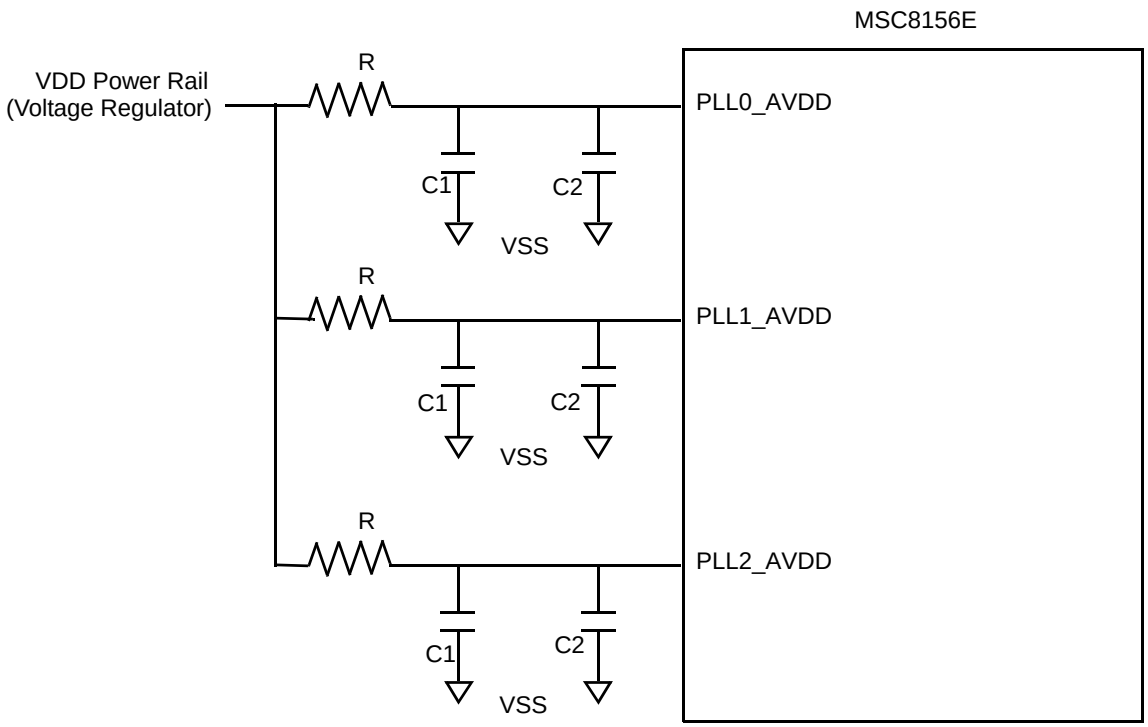

Figure 37. PLL Supplies

Each SerDes PLL power supply must be filtered using a circuit similar to the one shown in Figure 38, to ensure stability of the internal clock. For maximum effectiveness, the filter circuit should be placed as closely as possible to the SRn_PLL_AVDD ball to ensure it filters out as much noise as possible. The ground connection should be near the SRn_PLL_AVDD ball. The 0.003 µF capacitor is closest to the ball, followed by the two 2.2 µF capacitors, and finally the 1 Ω resistor to the board supply plane. The capacitors are connected from SRn_PLL_AVDD to the ground plane. Use ceramic chip capacitors with the highest possible self-resonant frequency. All trances should be kept short, wide, and direct.

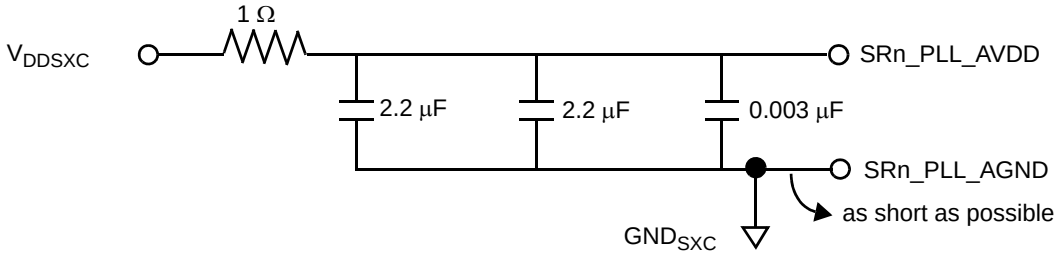

Figure 38. SerDes PLL Supplies

Downloaded from Arrow.com.

3.3 Clock and Timing Signal Board Layout Considerations

When laying out the system board, use the following guidelines:

- Keep clock and timing signal paths as short as possible and route with 50 Ω impedance.
- Use a serial termination resistor placed close to the clock buffer to minimize signal reflection. Use the following equation to compute the resistor value:

  Rterm = Rim – Rbuf

  where Rim = trace characteristic impedance

  Rbuf = clock buffer internal impedance.

3.4 SGMII AC-Coupled Serial Link Connection Example

Figure 39 shows an example of a 4-wire AC-coupled serial link connection. For additional layout suggestions, see *AN3556 MSC815x High Speed Serial Interface Hardware Design Considerations*, available on the Freescale website or from your local sales office or representative.

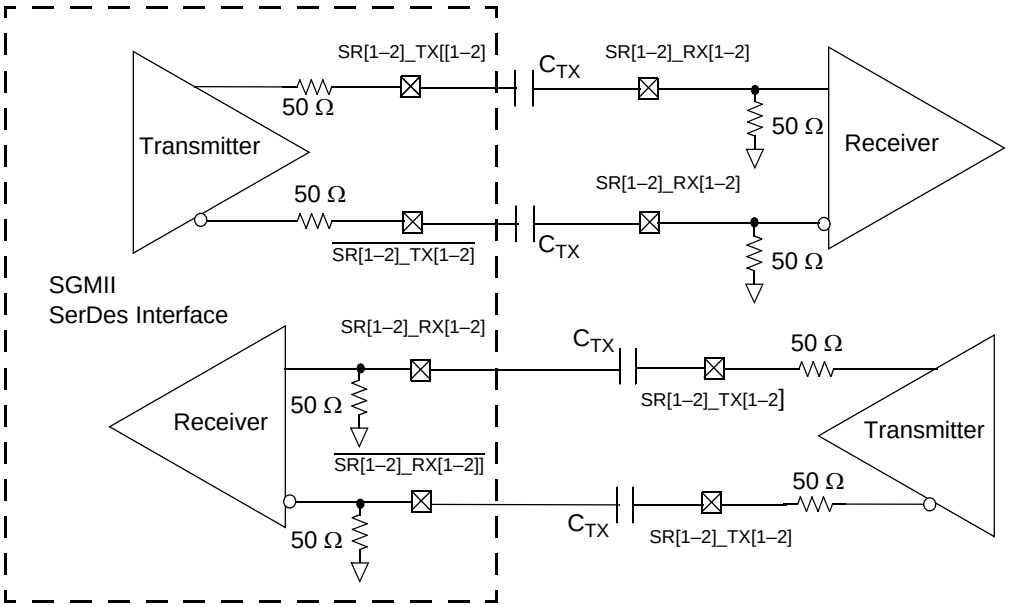

Figure 39. 4-Wire AC-Coupled SGMII Serial Link Connection Example

Downloaded from Arrow.com.

3.5 Connectivity Guidelines

Note: Although the package actually uses a ball grid array, the more conventional term pin is used to denote signal connections in this discussion.

First, select the pin multiplexing mode to allocate the required I/O signals. Then use the guidelines presented in the following subsections for board design and connections. The following conventions are used in describing the connectivity requirements:

1. GND indicates using a 10 kΩ pull-down resistor (recommended) or a direct connection to the ground plane. Direct connections to the ground plane may yield DC current up to 50 mA through the I/O supply that adds to overall power consumption.
2. V_{DD} indicates using a 10 kΩ pull-up resistor (recommended) or a direct connection to the appropriate power supply. Direct connections to the supply may yield DC current up to 50 mA through the I/O supply that adds to overall power consumption.
3. Mandatory use of a pull-up or pull-down resistor is clearly indicated as “pull-up/pull-down.” For buses, each pin on the bus should have its own resistor.
4. NC indicates “not connected” and means do not connect anything to the pin.
5. The phrase “in use” indicates a typical pin connection for the required function.

Note: Please see recommendations #1 and #2 as mandatory pull-down or pull-up connection for unused pins in case of subset interface connection.

Downloaded from Arrow.com.

3.5.1 DDR Memory Related Pins

This section discusses the various scenarios that can be used with either of the MSC8251 DDR ports.

Note: The signal names in Table 40, Table 41 and Table 42 are generic names for a DDR SDRAM interface. For actual pin names refer to Table 1.

3.5.1.1 DDR Interface Is Not Used

Table 40. Connectivity of DDR Related Pins When the DDR Interface Is Not Used

Signal Name	Pin Connection
MDQ[0–63]	NC
MDQS[7–0]	NC
$\overline{\text{MDQS[7–0]}}$	NC
MA[15–0]	NC
MCK[0–2]	NC
$\overline{\text{MCK[0–2]}}$	NC
$\overline{\text{MCS[1–0]}}$	NC
MDM[7–0]	NC
MBA[2–0]	NC
$\overline{\text{MCAS}}$	NC
MCKE[1–0]	NC
MODT[1–0]	NC
MMDIC[1–0]	NC
$\overline{\text{MRAS}}$	NC
$\overline{\text{MWE}}$	NC
MECC[7–0]	NC
MDM8	NC
MDQS8	NC
$\overline{\text{MDQS8}}$	NC
MAPAR_OUT	NC
$\overline{\text{MAPAR_IN}}$	NC
MVREF[3]	NC
GVDD1/GVDD2[3]	NC

Notes:
1. For the signals listed in this table, the initial M stands for M1 or M2 depending on which DDR controller is not used.
2. If the DDR controller is not used, disable the internal DDR clock by setting the appropriate bit in the System Clock Control Register (SCCR) and put all DDR I/O in sleep mode by setting DRx_GCR[DDRx_DOZE] (for DDR controller x). See the *Clocks* and *General Configuration Registers* chapters in the ***MSC8251 Reference Manual*** for details.
3. For MSC8251 Revision 1 silicon, these pins were connected to GND. For newer revisions of the MSC8251, connecting these pins to GND increases device power consumption.

Downloaded from Arrow.com.

3.5.1.2 DDR Interface Is Used With 32-Bit DDR Memory Only

Table 41 lists unused pin connection when using 32-bit DDR memory. The 32 most significant data lines are not used.

Table 41. Connectivity of DDR Related Pins When Using 32-bit DDR Memory Only

Signal Name	Pin Connection
MDQ[31–0]	in use
MDQ[63–32]	NC
MDQS[3–0]	in use
MDQS[7–4]	NC
$\overline{\text{MDQS[3–0]}}$	in use
$\overline{\text{MDQS[7–4]}}$	NC
MA[15–0]	in use
MCK[2–0]	in use
$\overline{\text{MCK[2–0]}}$	in use
$\overline{\text{MCS[1–0]}}$	in use
MDM[3–0]	in use
MDM[7–4]	NC
MBA[2–0]	in use
$\overline{\text{MCAS}}$	in use
MCKE[1–0]	in use
MODT[1–0]	in use
MMDIC[1–0]	in use
$\overline{\text{MRAS}}$	in use
$\overline{\text{MWE}}$	in use
MVREF	in use
GVDD1/GVDD2	in use

Notes:
1. For the signals listed in this table, the initial M stands for M1 or M2 depending on which DDR controller is not used.
2. For MSC8251 Revision 1 silicon, these pins were connected to GND (or VDD). For newer revisions of the MSC8251, connecting these pins to GND increases device power consumption.

3.5.1.3 ECC Unused Pin Connections

When the error code correction mechanism is not used in any 32- or 64-bit DDR configuration, refer to Table 42 to determine the correct pin connections.

Table 42. Connectivity of Unused ECC Mechanism Pins

Signal Name	Pin connection
MECC[7–0]	NC
MDM8	NC
MDQS8	NC
$\overline{\text{MDQS8}}$	NC

Notes:
1. For the signals listed in this table, the initial M stands for M1 or M2 depending on which DDR controller is not used.
2. For MSC8251 Revision 1 silicon, these pins were connected to GND (or VDD). For newer revisions of the MSC8251, connecting these pins to GND increases device power consumption.

Downloaded from Arrow.com.

3.5.1.4 DDR2 Unused MAPAR Pin Connections

When the MAPAR signals are not used, refer to Table 43 to determine the correct pin connections.

Table 43. Connectivity of MAPAR Pins for DDR2

Signal Name	Pin connection
MAPAR_OUT	NC
$\overline{\text{MAPAR_IN}}$	NC

Notes: **1.** For the signals listed in this table, the initial M stands for M1 or M2 depending on which DDR controller is used for DDR2.
2. For MSC8251 Revision 1 silicon, these pins were connected to GND. For newer revisions of the MSC8251, connecting these pins to GND increases device power consumption.

3.5.2 HSSI-Related Pins

3.5.2.1 HSSI Port Is Not Used

The signal names in Table 44 and Table 45 are generic names for a RapidIO interface. For actual pin names refer to Table 1.

Table 44. Connectivity of Serial RapidIO Interface Related Pins When the RapidIO Interface Is Not Used

Signal Name	Pin Connection
SR_IMP_CAL_RX	NC
SR_IMP_CAL_TX	NC
$\overline{\text{SR[1–2]_REF_CLK}}$	SXCVSS
SR[1–2]_REF_CLK	SXCVSS
SR[1–2]_RXD[3–0]	SXCVSS
$\overline{\text{SR[1–2]_RXD[3–0]}}$	SXCVSS
$\overline{\text{SR[1–2]_TXD[3–0]}}$	NC
SR[1–2]_TXD[3–0]	NC
SR[1–2]_PLL_AVDD	In use
SR[1–2]_PLL_AGND	In use
SXPVSS	In use
SXCVSS	In use
SXPVDD	In use
SXCVDD	In use

Note: All lanes in the HSSI SerDes should be powered down. Refer to the *MSC8251 Reference Manual* for details.

3.5.2.2 HSSI Specific Lane Is Not Used

Table 45. Connectivity of HSSI Related Pins When Specific Lane Is Not Used

Signal Name	Pin Connection
SR_IMP_CAL_RX	In use
SR_IMP_CAL_TX	In use
$\overline{\text{SR[1–2]_REF_CLK}}$	In use
SR[1–2]_REF_CLK	In use

Downloaded from Arrow.com.

Table 45. Connectivity of HSSI Related Pins When Specific Lane Is Not Used (continued)

Signal Name	Pin Connection
SR[1–2]_RXD*n*	SXCVSS
$\overline{\text{SR[1–2]_RXD}n}$	SXCVSS
$\overline{\text{SR[1–2]_TXD}n}$	NC
SR[1–2]_TXD*n*	NC
SR[1–2]_PLL_AVDD	in use
SR[1–2]_PLL_AGND	in use
SXPVSS	in use
SXCVSS	in use
SXPVDD	in use
SXCVDD	in use
Note: The ***n*** indicates the lane number {0,1,2,3} for all unused lanes.	

3.5.3 RGMII Ethernet Related Pins

Note: Table 46 and Table 47 assume that the alternate function of the specified pin is not used. If the alternate function is used, connect the pin as required to support that function.

Table 46. Connectivity of RGMII Related Pins When the RGMII Interface Is Not Used

Signal Name	Pin Connection
GE1_RX_CTL	GND
GE2_TX_CTL	NC
Note: Assuming GE1 and GE2 are disabled in the reset configuration word.	

GE_MDC and GE_MDIO pins should be connected as required by the specified protocol. If neither GE1 nor GE2 is used, Table 47 lists the recommended management pin connections.

Table 47. Connectivity of GE Management Pins When GE1 and GE2 Are Not Used

Signal Name	Pin Connection
GE_MDC	NC
GE_MDIO	NC

3.5.4 TDM Interface Related Pins

Table 48 lists the board connections of the TDM pins when an entire specific TDM is not used. For multiplexing options that select a subset of a TDM interface, use the connections described in Table 48 for those signals that are not selected. Table 48 assumes that the alternate function of the specified pin is not used. If the alternate function is used, connect that pin as required to support the selected function.

Table 48. Connectivity of TDM Related Pins When TDM Interface Is Not Used

Signal Name	Pin Connection
TDM*n*RCLK	GND
TDM*n*RDAT	GND
TDM*n*RSYN	GND

Downloaded from Arrow.com.

Table 48. Connectivity of TDM Related Pins When TDM Interface Is Not Used

Signal Name	Pin Connection
TDM***n***TCLK	GND
TDMT***n***DAT	GND
TDM***n***TSYN	GND
V_{DDIO}	2.5 V
Notes: **1.** ***n*** = {0, 1, 2,3} **2.** In case of subset of TDM interface usage please make sure to disable unused TDM modules. See *TDM* chapter in the ***MSC8251 Reference Manual*** for details.	

3.5.5 Miscellaneous Pins

Table 49 lists the board connections for the pins not required by the system design. Table 49 assumes that the alternate function of the specified pin is not used. If the alternate function is used, connect that pin as required to support the selected function.

Table 49. Connectivity of Individual Pins When They Are Not Required

Signal Name	Pin Connection
CLKOUT	NC
EE0	GND
EE1	NC
GPIO[31–0]	NC
SCL	See the GPIO connectivity guidelines in this table.
SDA	See the GPIO connectivity guidelines in this table.
$\overline{\text{INT_OUT}}$	NC
$\overline{\text{IRQ[15–0]}}$	See the GPIO connectivity guidelines in this table.
$\overline{\text{NMI}}$	V_{DDIO}
$\overline{\text{NMI_OUT}}$	NC
RC[21–0]	GND
STOP_BS	GND
TCK	GND
TDI	GND
TDO	NC
TMR[4–0]	See the GPIO connectivity guidelines in this table.
TMS	GND
$\overline{\text{TRST}}$	See **Section 3.1** for guidelines.
URXD	See the GPIO connectivity guidelines in this table.
UTXD	See the GPIO connectivity guidelines in this table.
DDN[1–0]	See the GPIO connectivity guidelines in this table.
DRQ[1–0]	See the GPIO connectivity guidelines in this table.
$\overline{\text{RCW_LSEL_0}}$	GND
$\overline{\text{RCW_LSEL_1}}$	GND
$\overline{\text{RCW_LSEL_2}}$	GND
$\overline{\text{RCW_LSEL_3}}$	GND
V_{DDIO}	2.5 V

Note: For details on configuration, see the *MSC8251 Reference Manual*. For additional information, refer to the *MSC815x and MSC825x DSP Family Design Checklist*.

Downloaded from Arrow.com.

3.6 Guide to Selecting Connections for Remote Power Supply Sensing

To assure consistency of input power levels, some applications use a practice of connecting the remote sense signal input of an on-board power supply to one of power supply pins of the IC device. The advantage of using this connection is the ability to compensate for the slow components of the IR drop caused by resistive supply current path from on-board power supply to the pins layer on the package. However, because of specific device requirements, not every ball connection can be selected as the remote sense pin. Some of these pins must be connected to the appropriate power supply or ground to ensure correct device functionality. Some connections supply critical power to a specific high usage area of the IC die; using such a connection as a non-supply pin could impact necessary supply current during high current events. The following balls can be used as the board supply remote sense output without degrading the power and ground supply quality:

- *VDD:* W10, T19
- *VSS:* J18, Y10
- *M3VDD:* None

Do not use any other connections for remote sensing. Use of any other connections for this purpose can result in application and device failure.

4 Ordering Information

Consult a Freescale Semiconductor sales office or authorized distributor to determine product availability and place an order.

Qual Status	Cores	Encryption	Temeprature Range	Package Type	Core Frequency	Die Revision
PC = Prototype MSC = Production	8251 = 1 Core, No MAPLE	[blank] = Non-encrypted	S = 0° to 105°C T = –40°C to 105°C	VT = FC-PBGA Lead Free AG = FC-PBGA C4/C5 Lead Free	1000 = 1Ghz	B = Rev 2.1

Downloaded from Arrow.com.

5 Package Information

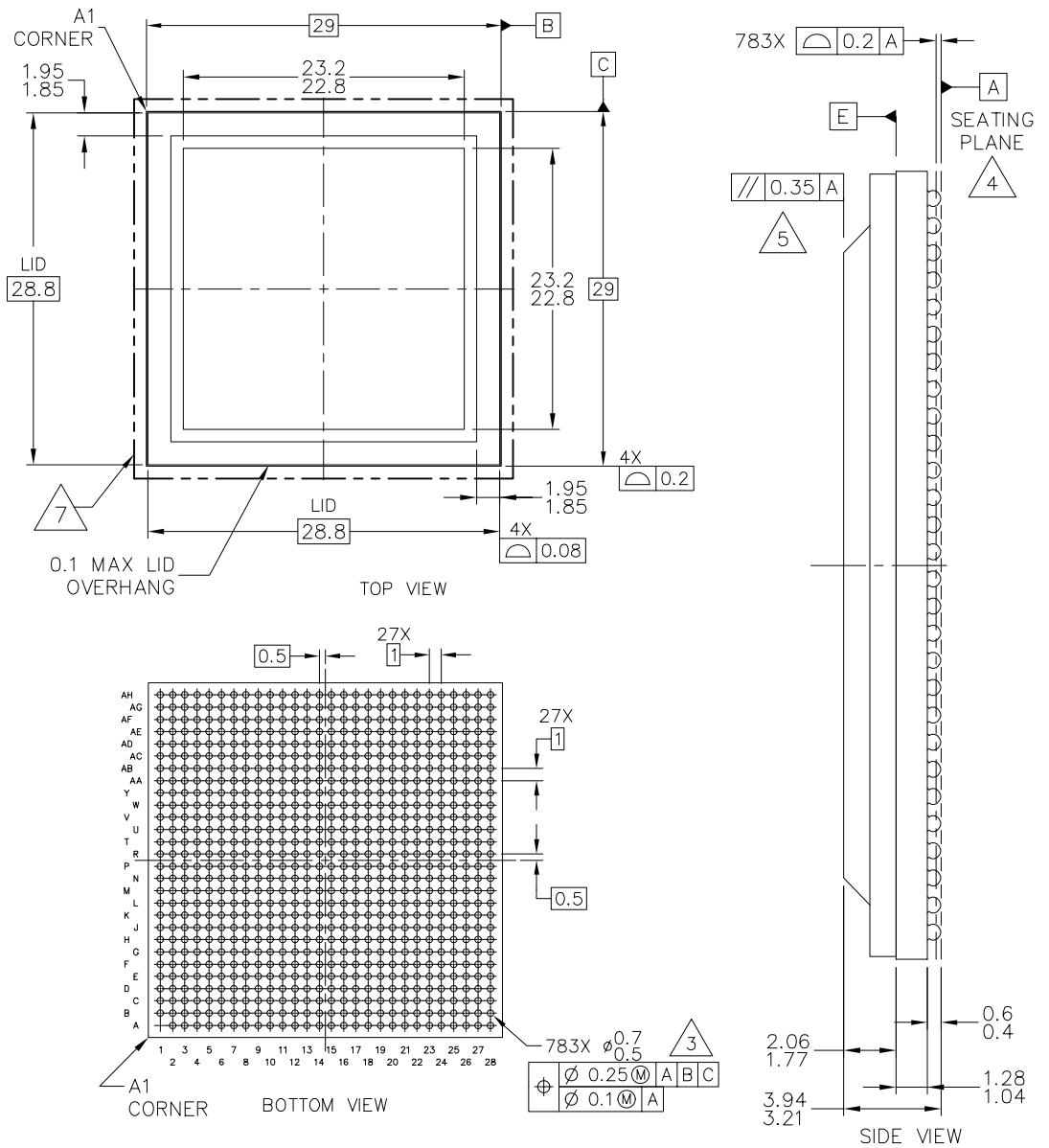

NOTES:

1. ALL DIMENSIONS IN MILLIMETERS.
2. DIMENSIONING AND TOLERANCING PER ASME Y14.5M-1994.
3. MAXIMUM SOLDER BALL DIAMETER MEASURE PARALLEL TO DATUM A.
4. DATUM A, THE SEATING PLANE, IS DETERMINED BY THE SPHERICAL CROWNS OF THE SOLDER BALLS.
5. PARALLELISM MEASUREMENT SHALL EXCLUDE ANY EFFECT OF MARK ON TOP SURFACE OF PACKAGE.
6. ALL DIMENSIONS ARE SYMMETRIC ACROSS THE PACKAGE CENTER LINES, UNLESS DIMENSIONED OTHERWISE.
7. 29.2MM MAXIMUM PACKAGE ASSEMBLY (LID + LAMINATE) X AND Y.

Figure 40. MSC8251 Mechanical Information, 783-ball FC-PBGA Package

Downloaded from Arrow.com.

6 Product Documentation

Following is a general list of supporting documentation:

- *MSC8251 Technical Data Sheet* (MSC8251). Details the signals, AC/DC characteristics, clock signal characteristics, package and pinout, and electrical design considerations of the MSC8251 device.
- *MSC8251 Reference Manual* (MSC8251RM). Includes functional descriptions of the extended cores and all the internal subsystems including configuration and programming information.
- *Application Notes*. Cover various programming topics related to the StarCore DSP core and the MSC8251 device.
- *QUICC Engine Block Reference Manual with Protocol Interworking* (QEIWRM). Provides detailed information regarding the QUICC Engine technology including functional description, registers, and programming information.
- *SC3850 DSP Core Reference Manual*. Covers the SC3850 core architecture, control registers, clock registers, program control, and instruction set.
- *MSC8156SC3850 DSP Core Subsystem Reference Manual*. Covers core subsystem architecture, functionality, and registers.

7 Revision History

Table 50 provides a revision history for this data sheet.7

Table 50. Document Revision History

Rev.	Date	Description
0	Apr. 2010	• Initial public release.
1	May 2010	• Changed connection for pins K17, L14, L16, M15, M17, and N14 from VDD to VSS in Table 1. • Updated **Section 3.1.2**, *Power-On Ramp Time*.
2	Dec 2010	• Updated Table 16. • Updated **Section 3.1.2**, *Power-On Ramp Time*. • Updated **Section 4**, *Ordering Information*.
3	Mar 2011	• Updated Table 8. • Updated Table 15. • Updated Table 17. • Updated Table 33. • Updated Table 35. • Updated Table 39.
4	May 2011	• Updated Table 1. Changed the pin types for the following: – F25 from ground to power. – F26 from power to ground. – T6 from power to O.
5	Oct 2011	• Updated Table 34 and Table 35 to reflect 1 Gbps and 100 Mbps data rate instead of 1 GHz and 100 MHz.
6	Dec 2011	• Added note 4 to Table 39.
7	Aug 2013	• Updated Section 4, “Ordering Information”.

Downloaded from Arrow.com.

Downloaded from Arrow.com.

How to Reach Us:

Home Page:
freescale.com

Web Support:
freescale.com/support

Information in this document is provided solely to enable system and software implementers to use Freescale products. There are no express or implied copyright licenses granted hereunder to design or fabricate any integrated circuits based on the information in this document.

Freescale reserves the right to make changes without further notice to any products herein. Freescale makes no warranty, representation, or guarantee regarding the suitability of its products for any particular purpose, nor does Freescale assume any liability arising out of the application or use of any product or circuit, and specifically disclaims any and all liability, including without limitation consequential or incidental damages. “Typical” parameters that may be provided in Freescale data sheets and/or specifications can and do vary in different applications, and actual performance may vary over time. All operating parameters, including “typicals,” must be validated for each customer application by customer’s technical experts. Freescale does not convey any license under its patent rights nor the rights of others. Freescale sells products pursuant to standard terms and conditions of sale, which can be found at the following address: freescale.com/SalesTermsandConditions.

Freescale, the Freescale logo, CodeWarrior, ColdFire, ColdFire+, StarCore are trademarks of Freescale Semiconductor, Inc., Reg. U.S. Pat. & Tm. Off. QUICC Engine is a trademark of Freescale Semiconductor, Inc. All other product or service names are the property of their respective owners.
© 2010–2013 Freescale Semiconductor, Inc.

Document Number: MSC8251
Rev. 7
08/2013

Downloaded from Arrow.com.