COSEL

Medical electric equipment | Power Factor Correction | World wide | Safety Approvals | EMI | Inrush current limiting | OCP | OVP | Remote ON/OFF | Parallel Operation | 1U | Pulse Load

AEA-series

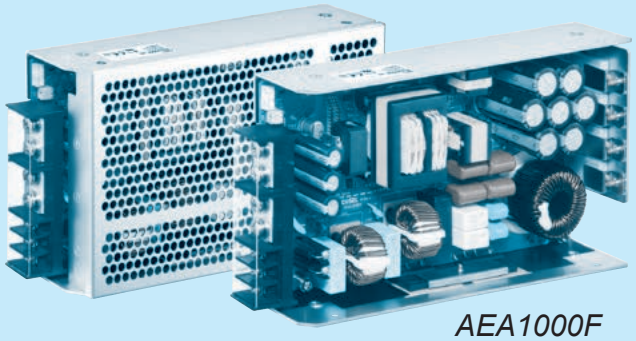

AEA1000F

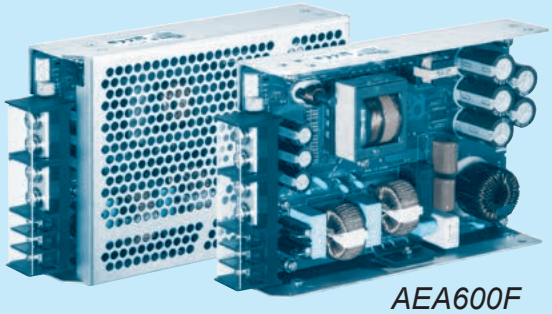

AEA600F

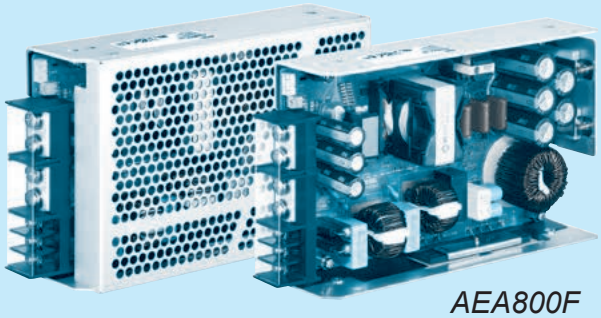

AEA800F

Feature

High power & peak power
High efficiency
Low profile (41mm, 1.61 inch = meet to 1U height)
For medical electric equipment (ANSI/AAMI ES60601, EN60601-1 3rd, IEC60601-1-2 4th Ed.)
Suitable for BF application (Output-FG : 1MOPP, Input-Output : 2MOPP)
OVC III (according to EN62477-1)
Complies with SEMI F47 (Refer to Instruction Manual)
UL508 (Optional)

Safety agency approval

UL62368-1, ANSI/AAMI ES60601-1
C-UL (CAN/CSA62368-1, CAN/CSA60601-1)
EN62368-1, EN60601-1 3rd
Complies with IEC60601-1-2 4th Ed. , IEC60335-1(AEA600F)
EN62477-1 (OVC III)
UL508 (Optional)

5-year warranty (Refer to Instruction Manual)

CE marking

Low Voltage Directive
RoHS Directive

UKCA marking

Electrical Equipment Safety Regulations
RoHS Regulations

EMI

Complies with FCC-B, CISPR11-B, CISPR32-B, EN55011-B, EN55032-B, VCCI-B

EMS Compliance : EN61204-3, EN61000-6-2 IEC60601-1-2(2014), EN60601-1-2(2015)

EN61000-4-2
EN61000-4-3
EN61000-4-4
EN61000-4-5
EN61000-4-6
EN61000-4-8
EN61000-4-11

Downloaded from Arrow.com.

COSEL AC-DC Power Supplies Medical Type

AEA600F

Ordering information

AE	A	600	F	-□□	-□
①	②	③	④	⑤	⑧

RoHS
2MOPP

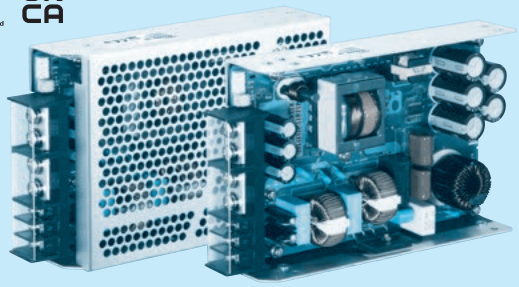

Example recommended EMI/EMC filter
EAC-20-472

High voltage pulse noise type : EAP series
Low leakage current type : EAM series

*Use of an EMI/EMC filter is recommended when a power supply is connected with several devices so that additional filtering is necessary.
*Make sure that your final application will meet the required EMC standard by measuring the EMI level of the power supply used together with an EMI/EMC filter.

① Series name
② Single output
③ Output wattage
④ Universal input
⑤ Output voltage
⑧ Optional *1
C : with Coating
N : with cover
T : Vertical terminal block
J : Connector type
R3 : with Subfeatures (5V1A AUX,12V1A AUX Remote ON/OFF, Alarm)
I4 : with MODBUS interface and Subfeatures (5V1A AUX,12V1A AUX Remote ON/OFF, Alarm)
T5 : UL508 (Except 32V)
P5 : shutdown type overcurrent protection
For option details, refer to instruction manual 6.1.

Please refer to derating curve, because the rated load current depends on cooling method that is convection cooling or forced air.
*Make sure necessary tests will be carried out on your end equipment with the power supply installed in accordance with any required EMC/EMI regulations.

MODEL		AEA600F-24	AEA600F-32	AEA600F-36	AEA600F-48
MAX OUTPUT WATTAGE[W]		600	601	601.2	600
DC OUTPUT (forced air)	ACIN 100V	24V 20.0 (Peak 42.0) A	32V 15.0 (Peak 31.5) A	36V 13.4 (Peak 28.0) A	48V 10.0 (Peak 21.0) A
	ACIN 230V	24V 25.0 (Peak 52.5) A	32V 18.8 (Peak 39.4) A	36V 16.7 (Peak 35.0) A	48V 12.5 (Peak 26.3) A

SPECIFICATIONS

	MODEL		AEA600F-24	AEA600F-32	AEA600F-36	AEA600F-48
INPUT	VOLTAGE[V]		AC85 - 264 1 ϕ (Output derating is required at AC85V - 170V. See "Derating")			
	CURRENT[A]	ACIN 100V	5.7typ (Io=20A)	5.7typ (Io=15.0A)	5.7typ (Io=13.4A)	5.7typ (Io=10A)
		ACIN 230V	2.9typ (Io=25A)	2.9typ (Io=18.8A)	2.9typ (Io=16.7A)	2.9typ (Io=12.5A)
	FREQUENCY[Hz]		50/60 (45 - 66)			
	EFFICIENCY[%]	ACIN 100V	92.0%typ (Io=20A)	92.0typ (Io=15.0A)	92.0%typ (Io=13.4A)	92.0%typ (Io=10A)
		ACIN 230V	94.5%typ (Io=25A)	95.0typ (Io=18.8A)	95.0%typ (Io=16.7A)	95.0%typ (Io=12.5A)
	POWER FACTOR	ACIN 100V	0.98typ (Io=20A)	0.98typ (Io=15.0A)	0.98typ (Io=13.4A)	0.98typ (Io=10A)
		ACIN 230V	0.95typ (Io=25A)	0.95typ (Io=18.8A)	0.95typ (Io=16.7A)	0.95typ (Io=12.5A)
	INRUSH CURRENT[A] *2	ACIN 100V	20/40typ (Io=20A)	20/40typ (Io=15.0A)	20/40typ (Io=13.4A)	20/40typ (Io=10A)
		ACIN 230V	40/40typ (Io=25A)	40/40typ (Io=18.8A)	40/40typ (Io=16.7A)	40/40typ (Io=12.5A)
	LEAKAGE CURRENT[mA]		0.3max (ACIN 240V 60Hz, Io=100%, According to IEC60601-1)			
OUTPUT	VOLTAGE[V]		24	32	36	48
	CURRENT[A]	ACIN 100V	14.0 (Peak 42.0) convection	10.5 (Peak 31.5) convection	9.4 (Peak 28.0) convection	7.0 (Peak 21.0) convection
			20.0 (Peak 42.0) forced air	15.0 (Peak 31.5) forced air	13.4 (Peak 28.0) forced air	10.0 (Peak 21.0) forced air
		ACIN 230V	17.5 (Peak 52.5) convection	13.2 (Peak 39.4) convection	11.7 (Peak 35.0) convection	8.8 (Peak 26.3) convection
			25.0 (Peak 52.5) forced air	18.8 (Peak 39.4) forced air	16.7 (Peak 35.0) forced air	12.5 (Peak 26.3) forced air
	LINE REGULATION[mV]		96max	144max	144max	192max
	LOAD REGULATION[mV]		150max	240max	240max	300max
	RIPPLE[mVp-p] *3	0 to +50℃	120max	200max	200max	200max
		-20 to 0℃	200max	300max	300max	350max
	RIPPLE NOISE[mVp-p] *3	0 to +50℃	150max	270max	230max	250max
		-20 to 0℃	230max	350max	350max	500max
	TEMPERATURE REGULATION[mV]	0 to +50℃	240max	360max	360max	480max
	DRIFT[mV] *4		96max	144max	144max	192max
	START-UP[ms]		550typ (ACIN 100V/230V) 750typ (ACIN 85V-264V)			
	HOLD-UP[ms]		20typ (ACIN 230V, Io=100%)			
	OUTPUT VOLTAGE ADJUSTMENT RANGE[V]		21.6 to 26.4	28.8 to 35.2	32.4 to 39.6	43.2 to 52.8
	OUTPUT VOLTAGE SETTING[V]		23.5 to 24.5	31.0 to 33.0	35.0 to 37.0	47.0 to 49.0
PROTECTION CIRCUIT AND OTHERS	OVERCURRENT PROTECTION		Works over 101% of peak current and recovers automatically *5			
	OVERVOLTAGE PROTECTION[V]		30 to 33.6	43.0 to 48.4	45 to 50.4	60 to 69.6
	ALARM		Optional (Input voltage alarm : PR, Output voltage alarm : PG)			
	REMOTE ON/OFF		Optional			
	AUX1		Optional (12V1A forced air)			
	AUX2		Optional (5V1A forced air)			
ISOLATION	INPUT-OUTPUT · PR · PG · RC · AUX *6		AC4,000V 1minute, Cutoff current = 10mA, DC500V 50MΩ min (At Room Temperature) 2MOPP			
	INPUT-FG		AC2,000V 1minute, Cutoff current = 10mA, DC500V 50MΩ min (At Room Temperature) 1MOPP			
	OUTPUT · PR · PG · RC · AUX-FG *6		AC1,500V 1minute, Cutoff current = 10mA, DC500V 50MΩ min (At Room Temperature) 1MOPP			
	OUTPUT · AUX1-PR · PG · RC · AUX2 *6		AC100V 1minute, Cutoff current = 25mA, DC100V 10MΩ min (At Room Temperature)			
ENVIRONMENT	OPERATING TEMP.,HUMID.AND ALTITUDE		-20 to +70℃, 20 - 90%RH (Non condensing), 5,000m (16,500feet) max			
	STORAGE TEMP.,HUMID.AND ALTITUDE		-20 to +75℃, 20 - 90%RH (Non condensing), 9,000m (30,000feet) max			
	VIBRATION		10 - 55Hz, 19.6m/s² (2G), 3minutes period, 60minutes each along X, Y and Z axis			
	IMPACT		196.1m/s² (20G), 11ms, once each X, Y and Z axis			
SAFETY AND NOISE REGULATIONS	AGENCY APPROVALS		UL62368-1, AANSI/AAMI ES 60601-1, C-UL (equivalent to CAN/CSA-C22.2 No.62368-1, CAN/CSA-C22.2 No.60601-1) EN62368-1, EN60601-1 3rd, EN62477-1 (OVCIII), UL508 (Optional. Except 32V), Complies with IEC60601-1-2 4th Ed. , IEC60335-1(Except 32V)			
	CONDUCTED NOISE		Complies with FCC Part15 classB, VCCI-B, CISPR32-B, EN55011-B, EN55032-B			
	HARMONIC ATTENUATOR *7		Complies with IEC61000-3-2 (Class A)			
OTHERS	CASE SIZE/WEIGHT		41×127×186mm [1.61×5×7.32 inches] (W×H×D) (without terminal block) / 1.0kg max			
	COOLING METHOD		Convection/Forced air			

*1 The listed options may affect the published standard specifications. Please contact us for detailed product specification
*2 The current of input surge to a built-in EMI/EMS Filter (0.2ms or less) is excluded.
*3 Measured by 20MHz oscilloscope or Ripple-Noise meter (equivalent to KEISOKUGIKEN:RM104). Please refer to the instruction manual 1.8.
*4 Drift is the change in DC output for an eight hours period after a half-hour warm-up at 25℃
*5 When the overcurrent protection continues,the output may be shut down.
*6 Applicable when AUX and remote control (optional) is added.
*7 Please contact us about another class.
*Sound noise may be generated by power supply in case of pulse load.

Downloaded from Arrow.com.

Features

- High power & peak power
- High efficiency : 94% typ (Input Voltage 230V, Output Voltage 24V)
- Low profile (41mm, 1.61 inch)
- For medical electric equipment (ANSI/AAMI ES60601, EN60601-1 3rd, IEC60601-1-2 4th Ed.)
- Suitable for BF application (Output-FG : 1MOPP, Input-Output : 2MOPP)
- OVC III (according to EN62477-1)
- Complies with SEMI F47 (Refer to Instruction Manual)
- With AUX1 (12V 1A), AUX2 (5V 1A) (Optional)

Block diagram

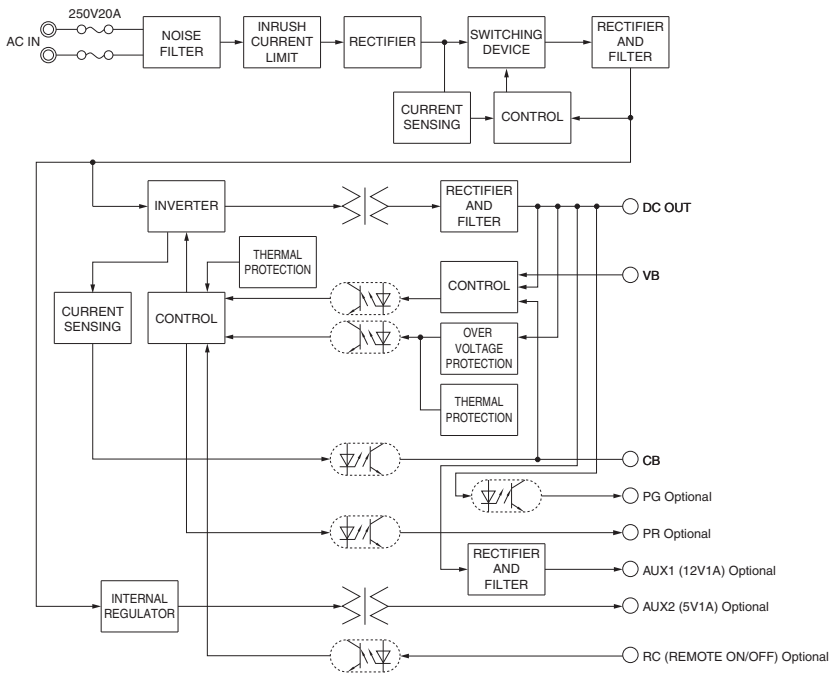

External view

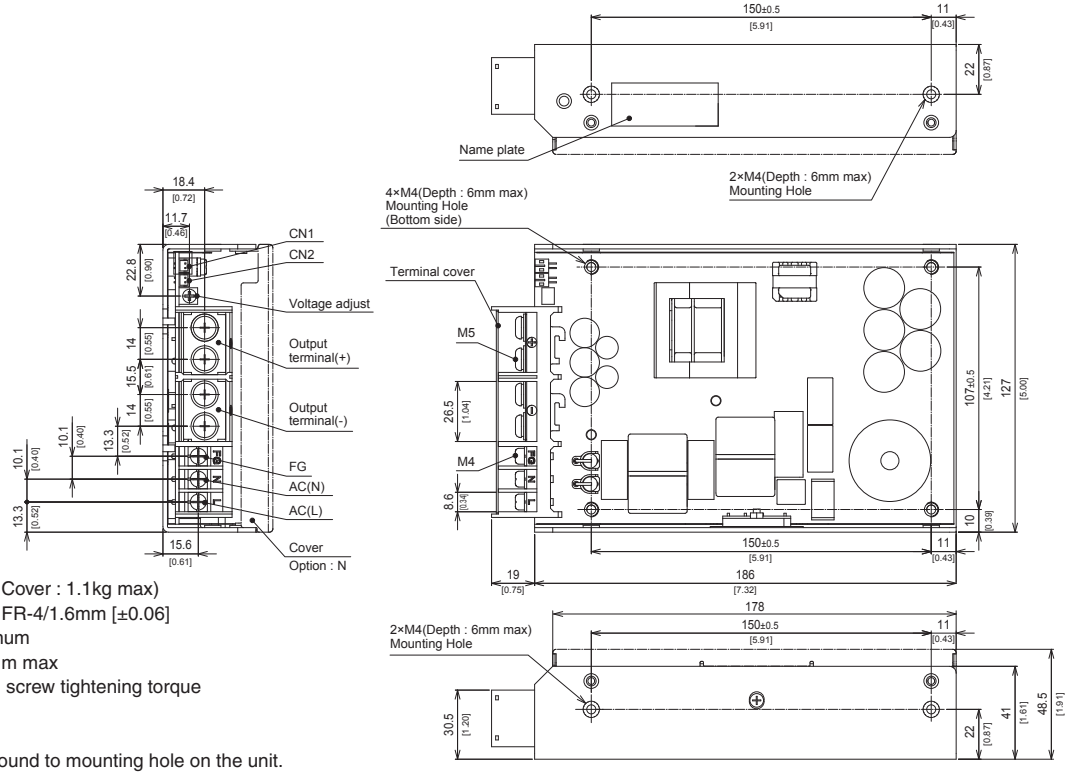

- ✻ Dimensions in mm [inch]
- ✻ Tolerance : ±1 [±0.04]
- ✻ Weight : 1.0kg max (with Cover : 1.1kg max)
- ✻ PCB Material/thickness : FR-4/1.6mm [±0.06]
- ✻ Chassis Material : Aluminum
- ✻ Mounting torque : 1.2N・m max
- ✻ Input and output terminal screw tightening torque
  M4 1.6N・m max
  M5 2.5N・m max
- ✻ Please connect safety ground to mounting hole on the unit.

Downloaded from Arrow.com.

COSEL AC-DC Power Supplies Medical Type

AEA800F

Ordering information

AE	A	800	F	-□□	-□
①	②	③	④	⑤	⑧

RoHS
2MOPP

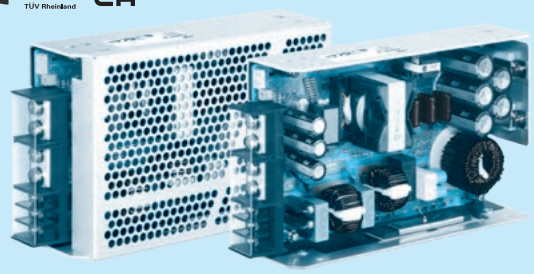

Example recommended EMI/EMC filter
NAC-30-472

High voltage pulse noise type : NAP series
Low leakage current type : NAM series

*Use of an EMI/EMC filter is recommended when a power supply is connected with several devices so that additional filtering is necessary.
*Make sure that your final application will meet the required EMC standard by measuring the EMI level of the power supply used together with an EMI/EMC filter.

① Series name
② Single output
③ Output wattage
④ Universal input
⑤ Output voltage
⑧ Optional *1
C : with Coating
N : with cover
T : Vertical terminal block
J : Connector type
R3 : with Subfeatures (5V1A AUX,12V1A AUX Remote ON/OFF, Alarm)
I4 : with MODBUS interface and Subfeatures (5V1A AUX,12V1A AUX Remote ON/OFF, Alarm)
T5 : UL508 (Except 30V)
P5 : shutdown type overcurrent protection
For option details, refer to instruction manual 6.1.

Please refer to derating curve, because the rated load current depends on cooling method that is convection cooling or forced air.
*Make sure necessary tests will be carried out on your end equipment with the power supply installed in accordance with any required EMC/EMI regulations.

MODEL		AEA800F-24	AEA800F-30	AEA800F-36	AEA800F-48
MAX OUTPUT WATTAGE[W]		816	816	817	816
DC OUTPUT (forced air)	ACIN 100V	24V 25.5 (Peak 54.3) A	30V 20.4 (Peak 43.5) A	36V 17.0 (Peak 36.3) A	48V 12.7 (Peak 27.2) A
	ACIN 230V	24V 34.0 (Peak 72.5) A	30V 27.2 (Peak 58.0) A	36V 22.7 (Peak 48.4) A	48V 17.0 (Peak 36.3) A

SPECIFICATIONS

	MODEL		AEA800F-24	AEA800F-30	AEA800F-36	AEA800F-48
INPUT	VOLTAGE[V]		AC85 - 264 1 ϕ (Output derating is required at AC85 - 170V. See "Derating")			
	CURRENT[A]	ACIN 100V	6.6typ (Io=25.5A)	6.6typ (Io=20.4A)	6.6typ (Io=17.0A)	6.6typ (Io=12.7A)
		ACIN 230V	3.7typ (Io=34.0A)	3.7typ (Io=27.2A)	3.7typ (Io=22.7A)	3.7typ (Io=17.0A)
	FREQUENCY[Hz]		50/60 (45 - 66)			
	EFFICIENCY[%]	ACIN 100V	92.5typ (Io=25.5A)	92.5typ (Io=20.4A)	92.5typ (Io=17.0A)	92.5typ (Io=12.7A)
		ACIN 230V	95.0typ (Io=34.0A)	95.0typ (Io=27.2A)	95.5typ (Io=22.7A)	95.5typ (Io=17.0A)
	POWER FACTOR	ACIN 100V	0.98typ (Io=25.5A)	0.98typ (Io=20.4A)	0.98typ (Io=17.0A)	0.98typ (Io=12.7A)
		ACIN 230V	0.95typ (Io=34.0A)	0.95typ (Io=27.2A)	0.95typ (Io=22.7A)	0.95typ (Io=17.0A)
	INRUSH CURRENT[A] *2	ACIN 100V	20/40typ (Io=25.5A)	20/40typ (Io=20.4A)	20/40typ (Io=17.0A)	20/40typ (Io=12.7A)
		ACIN 230V	40/40typ (Io=34.0A)	40/40typ (Io=27.2A)	40/40typ (Io=22.7A)	40/40typ (Io=17.0A)
	LEAKAGE CURRENT[mA]		0.3max (ACIN 240V 60Hz, Io=100%, According to IEC60601-1)			
OUTPUT	VOLTAGE[V]		24	30	36	48
	CURRENT[A]	ACIN 100V	17.6 (Peak 54.3) convection	14.1 (Peak 43.5) convection	11.7 (Peak 36.3) convection	8.8 (Peak 27.2) convection
			25.5 (Peak 54.3) forced air	20.4 (Peak 43.5) forced air	17.0 (Peak 36.3) forced air	12.7 (Peak 27.2) forced air
		ACIN 230V	23.5 (Peak 72.5) convection	18.8 (Peak 58.0) convection	15.7 (Peak 48.4) convection	11.8 (Peak 36.3) convection
			34.0 (Peak 72.5) forced air	27.2 (Peak 58.0) forced air	22.7 (Peak 48.4) forced air	17.0 (Peak 36.3) forced air
	LINE REGULATION[mV]		96max	120max	144max	192max
	LOAD REGULATION[mV]		150max	200max	240max	300max
	RIPPLE[mVp-p] *3	0 to +50℃	120max	200max	200max	250max
		-20 to 0℃	230max	300max	300max	400max
	RIPPLE NOISE[mVp-p] *3	0 to +50℃	150max	230max	230max	300max
		-20 to 0℃	250max	350max	350max	550max
	TEMPERATURE REGULATION[mV]	0 to +50℃	240max	300max	360max	480max
	DRIFT[mV] *4		96max	120max	144max	192max
	START-UP[ms]		550typ (ACIN 100V/230V) 750typ (ACIN 85V-264V)			
	HOLD-UP[ms]		20typ (ACIN 230V, Io=100%)			
	OUTPUT VOLTAGE ADJUSTMENT RANGE[V]		21.6 to 26.4	27.0 to 33.0	32.4 to 39.6	43.2 to 52.8
	OUTPUT VOLTAGE SETTING[V]		23.5 to 24.5	29.0 to 31.0	35.0 to 37.0	47.0 to 49.0
PROTECTION CIRCUIT AND OTHERS	OVERCURRENT PROTECTION		Works over 101% of peak current and recovers automatically *5			
	OVERVOLTAGE PROTECTION[V]		30 to 33.6	37.5 to 42.0	45 to 50.4	60 to 69.6
	ALARM		Optional (Input voltage alarm : PR, Output voltage alarm : PG)			
	REMOTE ON/OFF		Optional			
	AUX1		Optional (12V1A forced air)			
	AUX2		Optional (5V1A forced air)			
ISOLATION	INPUT-OUTPUT · PR · PG · RC · AUX *6		AC4,000V 1minute, Cutoff current = 10mA, DC500V 50MΩ min (At Room Temperature) 2MOPP			
	INPUT-FG		AC2,000V 1minute, Cutoff current = 10mA, DC500V 50MΩ min (At Room Temperature) 1MOPP			
	OUTPUT · PR · PG · RC · AUX-FG *6		AC1,500V 1minute, Cutoff current = 10mA, DC500V 50MΩ min (At Room Temperature) 1MOPP			
	OUTPUT · AUX1-PR · PG · RC · AUX2 *6		AC100V 1minute, Cutoff current = 25mA, DC100V 10MΩ min (At Room Temperature)			
ENVIRONMENT	OPERATING TEMP.,HUMID.AND ALTITUDE		-20 to +70℃, 20 - 90%RH (Non condensing), 5,000m (16,500feet) max			
	STORAGE TEMP.,HUMID.AND ALTITUDE		-20 to +75℃, 20 - 90%RH (Non condensing), 9,000m (30,000feet) max			
	VIBRATION		10 - 55Hz, 19.6m/s² (2G), 3minutes period, 60minutes each along X, Y and Z axis			
	IMPACT		196.1m/s² (20G), 11ms, once each X, Y and Z axis			
SAFETY AND NOISE REGULATIONS	AGENCY APPROVALS		UL62368-1, ANSI/AAMI ES 60601-1, C-UL (equivalent to CAN/CSA-C22.2 No.62368-1, CAN/CSA-C22.2 No.60601-1) EN62368-1, EN60601-1 3rd, EN62477-1 (OVCIII), UL508 (Optional), Complies with IEC60601-1-2 4th Ed.			
	CONDUCTED NOISE		Complies with FCC Part15 classB, VCCI-B, CISPR32-B, EN55011-B, EN55032-B			
	HARMONIC ATTENUATOR *7		Complies with IEC61000-3-2 (Class A)			
OTHERS	CASE SIZE/WEIGHT		50×127×203.2mm [1.97×5×8 inches] (W×H×D) (without terminal block) / 1.3kg max			
	COOLING METHOD		Convection/Forced air			

*1 The listed options may affect the published standard specifications. Please contact us for detailed product specification
*2 The current of input surge to a built-in EMI/EMS Filter (0.2ms or less) is excluded.
*3 Measured by 20MHz oscilloscope or Ripple-Noise meter (equivalent to KEISOKUGIKEN:RM104). Please refer to the instruction manual 1.8.
*4 Drift is the change in DC output for an eight hours period after a half-hour warm-up at 25℃
*5 When the overcurrent protection continues,the output may be shut down.
*6 Applicable when AUX and remote control (optional) is added.
*7 Please contact us about another class.
*Sound noise may be generated by power supply in case of pulse load.

Downloaded from Arrow.com.

Features

- High power & peak power
- High efficiency : 95% typ (Input Voltage 230V, Output Voltage 24V)
- Low profile (50mm, 1.97inch)
- For medical electric equipment (ANSI/AAMI ES60601, EN60601-1 3rd, IEC60601-1-2 4th Ed.)
- Suitable for BF application (Output-FG : 1MOPP, Input-Output : 2MOPP)
- OVC III (according to EN62477-1)
- Complies with SEMI F47 (Refer to Instruction Manual)
- With AUX1 (12V 1A), AUX2 (5V 1A) (Optional)

Block diagram

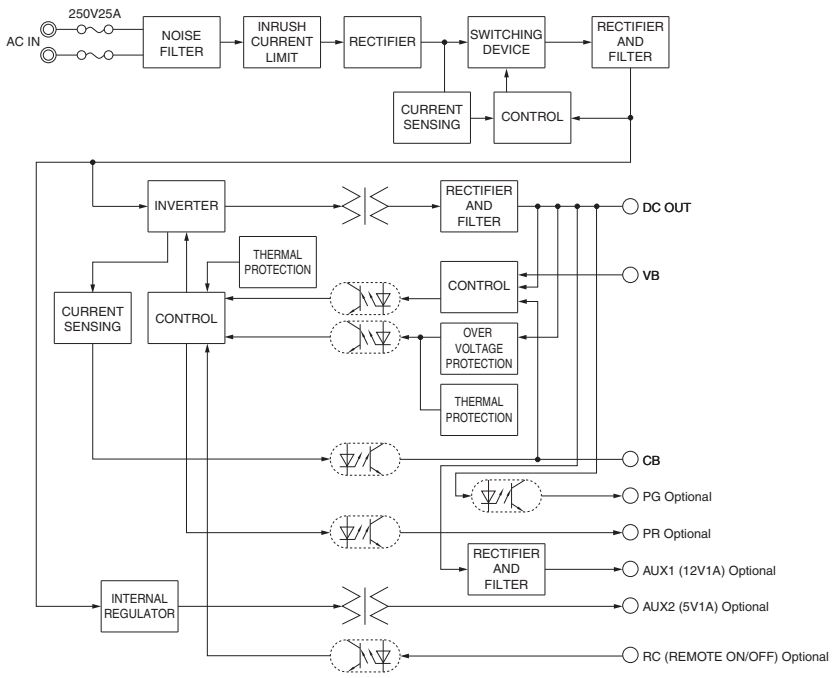

External view

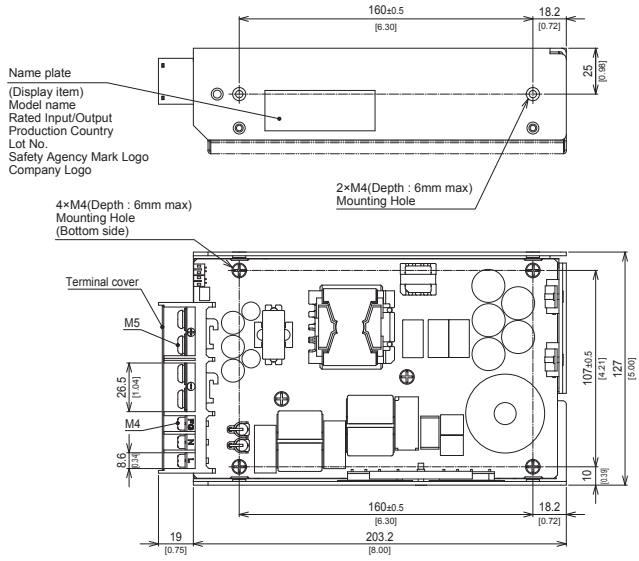

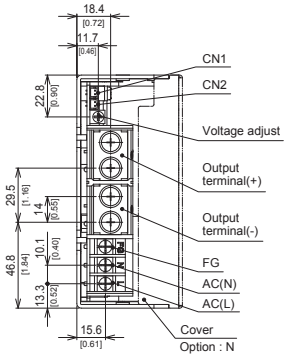

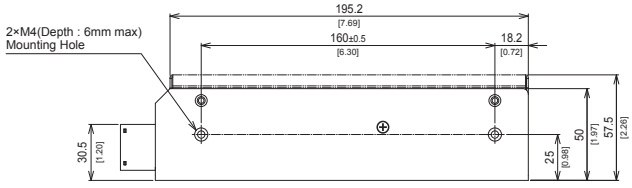

Option
-N : with CoverCover material Aluminum

* Dimensions in mm [inch]
* Tolerance : ±1 [±0.04]
* Weight : 1.3kg max (with Cover : 1.4kg max)
* PCB Material/thickness : FR-4/1.6mm [0.06]
* Chassis Material : Aluminum
* Mounting torque : 1.2N・m max
* Input and output terminal screw tightening torque
  M4 1.6N・m max
  M5 2.5N・m max
* Please connect safety ground to mounting hole on the unit.

Downloaded from Arrow.com.

COSEL AC-DC Power Supplies Medical Type

AEA1000F

Ordering information

AE	A	1000	F	-□□	-□
①	②	③	④	⑤	⑧

RoHS
2MOPP

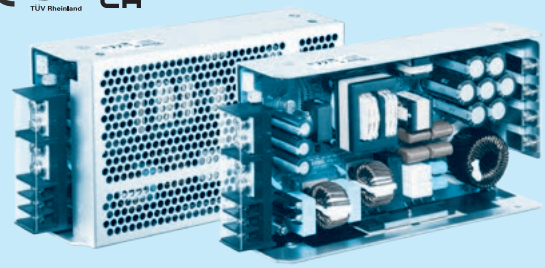

Example recommended EMI/EMC filter
NAC-30-472

High voltage pulse noise type : NAP series
Low leakage current type : NAM series

*Use of an EMI/EMC filter is recommended when a power supply is connected with several devices so that additional filtering is necessary.
*Make sure that your final application will meet the required EMC standard by measuring the EMI level of the power supply used together with an EMI/EMC filter.

① Series name
② Single output
③ Output wattage
④ Universal input
⑤ Output voltage
⑧ Optional *1
C : with Coating
N : with cover
T : Vertical terminal block
J : Connector type
R3 : with Subfeatures (5V1A AUX,12V1A AUX Remote ON/OFF, Alarm)
I4 : with MODBUS interface and Subfeatures (5V1A AUX,12V1A AUX Remote ON/OFF, Alarm)
T5 : UL508
P5 : shutdown type overcurrent protection
For option details, refer to instruction manual 6.1.

Please refer to derating curve, because the rated load current depends on cooling method that is convection cooling or forced air.
*Make sure necessary tests will be carried out on your end equipment with the power supply installed in accordance with any required EMC/EMI regulations.

MODEL		AEA1000F-24	AEA1000F-36	AEA1000F-48
MAX OUTPUT WATTAGE[W]		1,008	1,008	1,008
DC OUTPUT (forced air)	ACIN 100V	24V 31.5 (Peak 75.0) A	36V 21.0 (Peak 50.0) A	48V 15.8 (Peak 37.5) A
	ACIN 230V	24V 42.0 (Peak 100.0) A	36V 28.0 (Peak 66.7) A	48V 21.0 (Peak 50.0) A

SPECIFICATIONS

	MODEL		AEA1000F-24	AEA1000F-36	AEA1000F-48
INPUT	VOLTAGE[V]		AC85 - 264 1 ϕ (Output derating is required at AC85V - 170V. See "Derating")		
	CURRENT[A]	ACIN 100V	8.4typ (Io=31.5A)	8.4typ (Io=21.0A)	8.4typ (Io=15.8A)
		ACIN 230V	4.9typ (Io=42.0A)	4.9typ (Io=28.0A)	4.9typ (Io=21.0A)
	FREQUENCY[Hz]		50/60 (45 - 66)		
	EFFICIENCY[%]	ACIN 100V	92.0typ (Io=31.5A)	92.0typ (Io=21.0A)	92.0typ (Io=15.8A)
		ACIN 230V	95.0typ (Io=42.0A)	95.0typ (Io=28.0A)	95.0typ (Io=21.0A)
	POWER FACTOR	ACIN 100V	0.98typ (Io=31.5A)	0.98typ (Io=21.0A)	0.98typ (Io=15.8A)
		ACIN 230V	0.95typ (Io=42.0A)	0.95typ (Io=28.0A)	0.95typ (Io=21.0A)
	INRUSH CURRENT[A] *2	ACIN 100V	20/40typ (Io=31.5A)	20/40typ (Io=21.0A)	20/40typ (Io=15.8A)
		ACIN 230V	40/40typ (Io=42.0A)	40/40typ (Io=28.0A)	40/40typ (Io=21.0A)
	LEAKAGE CURRENT[mA]		0.3max (ACIN 240V 60Hz, Io=100%, According to IEC60601-1)		
OUTPUT	VOLTAGE[V]		24	36	48
	CURRENT[A]	ACIN 100V	22.5 (Peak 75.0) convection	15.0 (Peak 50.0) convection	11.3 (Peak 37.5) convection
			31.5 (Peak 75.0) forced air	21.0 (Peak 50.0) forced air	15.8 (Peak 37.5) forced air
		ACIN 230V	30.0 (Peak 100.0) convection	20.0 (Peak 66.7) convection	15.0 (Peak 50.0) convection
			42.0 (Peak 100.0) forced air	28.0 (Peak 66.7) forced air	21.0 (Peak 50.0) forced air
	LINE REGULATION[mV]		96max	144max	192max
	LOAD REGULATION[mV]		150max	240max	300max
	RIPPLE[mVp-p] *3	0 to +50℃	150max	230max	300max
		-20 to 0℃	230max	350max	450max
		Io=0 to 30%	500max	550max	600max
	RIPPLE NOISE[mVp-p] *3	0 to +50℃	300max	350max	400max
		-20 to 0℃	450max	530max	600max
		Io=0 to 30%	700max	750max	800max
	TEMPERATURE REGULATION[mV]	0 to +50℃	240max	360max	480max
	DRIFT[mV] *4		96max	144max	192max
	START-UP[ms]		550typ (ACIN 100V/230V) 750typ (ACIN 85V-264V)		
	HOLD-UP[ms]		20typ (ACIN 230V, Io=100%)		
	OUTPUT VOLTAGE ADJUSTMENT RANGE[V]		22.8 to 26.4	34.2 to 39.6	45.6 to 52.8
	OUTPUT VOLTAGE SETTING[V]		23.5 to 24.5	35.0 to 37.0	47.0 to 49.0
PROTECTION CIRCUIT AND OTHERS	OVERCURRENT PROTECTION		Works over 101% of peak current and recovers automatically *5		
	OVERVOLTAGE PROTECTION[V]		30 to 33.6	45 to 50.4	60 to 69.6
	ALARM		Optional (Input voltage alarm : PR, Output voltage alarm : PG)		
	REMOTE ON/OFF		Optional		
	AUX1		Optional (12V1A forced air)		
	AUX2		Optional (5V1A forced air)		
ISOLATION	INPUT-OUTPUT · PR · PG · RC · AUX *6		AC4,000V 1minute, Cutoff current = 10mA, DC500V 50MΩ min (At Room Temperature) 2MOPP		
	INPUT-FG		AC2,000V 1minute, Cutoff current = 10mA, DC500V 50MΩ min (At Room Temperature) 1MOPP		
	OUTPUT · PR · PG · RC · AUX-FG *6		AC1,500V 1minute, Cutoff current = 10mA, DC500V 50MΩ min (At Room Temperature) 1MOPP		
	OUTPUT · AUX1-PR · PG · RC · AUX2 *6		AC100V 1minute, Cutoff current = 25mA, DC100V 10MΩ min (At Room Temperature)		
ENVIRONMENT	OPERATING TEMP.,HUMID.AND ALTITUDE		-20 to +70℃, 20 - 90%RH (Non condensing), 5,000m (16,500feet) max		
	STORAGE TEMP.,HUMID.AND ALTITUDE		-20 to +75℃, 20 - 90%RH (Non condensing), 9,000m (30,000feet) max		
	VIBRATION		10 - 55Hz, 19.6m/s² (2G), 3minutes period, 60minutes each along X, Y and Z axis		
	IMPACT		196.1m/s² (20G), 11ms, once each X, Y and Z axis		
SAFETY AND NOISE REGULATIONS	AGENCY APPROVALS		UL62368-1, ANSI/AAMI ES 60601-1, C-UL (equivalent to CAN/CSA-C22.2 No.62368-1, CAN/CSA-C22.2 No.60601-1) EN62368-1, EN60601-1 3rd, EN62477-1 (OVCIII), UL508 (Optional), Complies with IEC60601-1-2 4th Ed.		
	CONDUCTED NOISE		Complies with FCC Part15 classB, VCCI-B, CISPR32-B, EN55011-B, EN55032-B		
	HARMONIC ATTENUATOR *7		Complies with IEC61000-3-2 (Class A)		
OTHERS	CASE SIZE/WEIGHT		50×127×228.6mm [1.97×5×9 inches] (W×H×D) without terminal block /1.5kg max		
	COOLING METHOD		Convection/Forced air		

*1 The listed options may affect the published standard specifications. Please contact us for detailed product specification
*2 The current of input surge to a built-in EMI/EMS Filter (0.2ms or less) is excluded.
*3 Measured by 20MHz oscilloscope or Ripple-Noise meter (equivalent to KEISOKUGIKEN:RM104). Please refer to the instruction manual 1.8. Ripple and ripple noise spec is change at Io=0 to 30% by burst operation.
*4 Drift is the change in DC output for an eight hours period after a half-hour warm-up at 25℃.
*5 When the overcurrent protection continues,the output may be shut down.
*6 Applicable when AUX and remote control (optional) is added.
*7 Please contact us about another class.
*Sound noise may be generated by power supply in case of pulse load.

Downloaded from Arrow.com.

Features

- High power & peak power
- High efficiency : 95% typ (Input Voltage 230V, Output Voltage 24V)
- Low profile (50mm, 1.97inch)
- For medical electric equipment (ANSI/AAMI ES60601, EN60601-1 3rd, IEC60601-1-2 4th Ed.)
- Suitable for BF application (Output-FG : 1MOPP, Input-Output : 2MOPP)
- OVC III (according to EN62477-1)
- Complies with SEMI F47 (Refer to Instruction Manual)
- With AUX1 (12V 1A), AUX2 (5V 1A) (Optional)

Block diagram

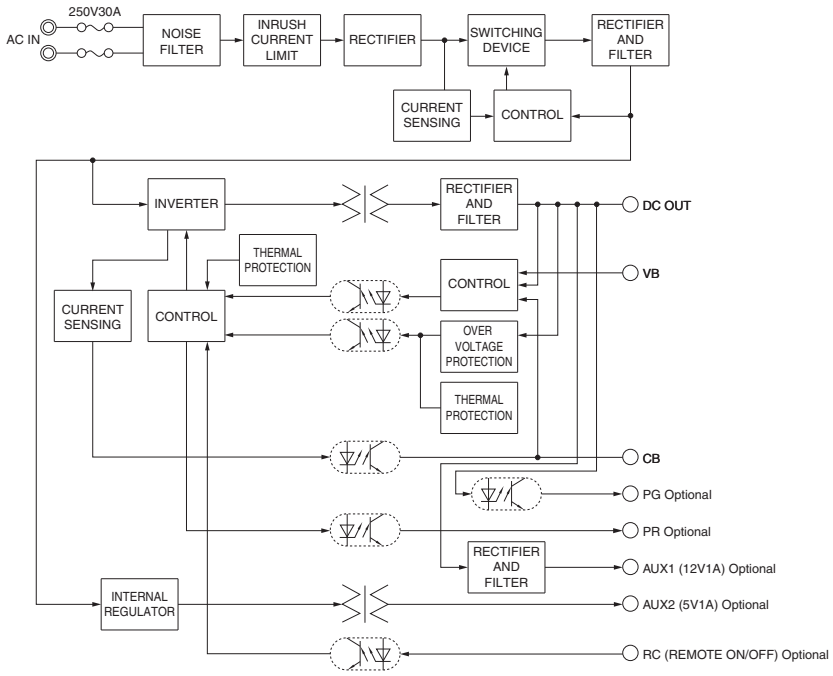

External view

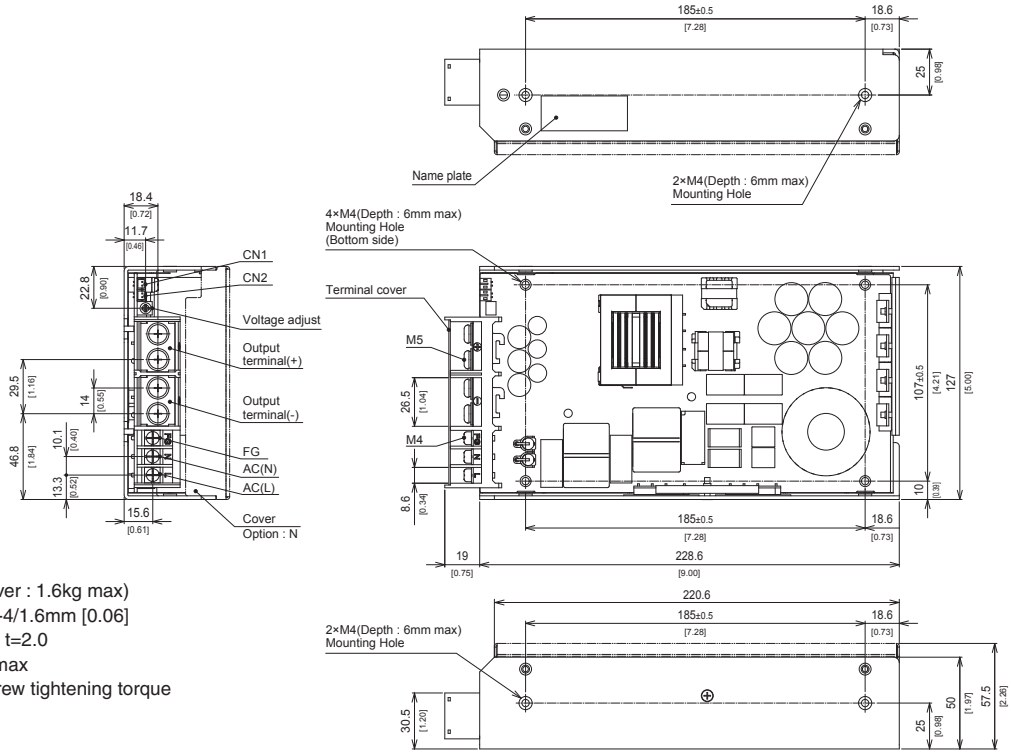

- ✻ Dimensions in mm [inch]
- ✻ Tolerance : ±1 [±0.04]
- ✻ Weight : 1.5kg max (with Cover : 1.6kg max)
- ✻ PCB Material/thickness : FR-4/1.6mm [0.06]
- ✻ Chassis Material : Aluminum t=2.0
- ✻ Mounting torque : 1.2N・m max
- ✻ Input and output terminal screw tightening torque
  M4 1.6N・m max
  M5 2.5N・m max
- ✻ Please connect safety ground to FG terminal on the unit.

Downloaded from Arrow.com.

Terminal Blocks

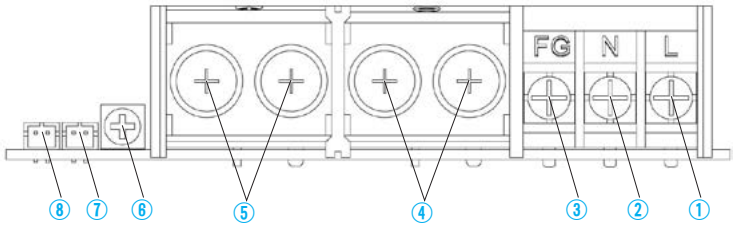

① AC (L) (M4)
② AC (N) (M4)
③ Frame ground (M4)
④ − Output (M5)
⑤ + Output (M5)
⑥ Output voltage adjustable potentiometer
⑦ CN2 connector
⑧ CN1 connector

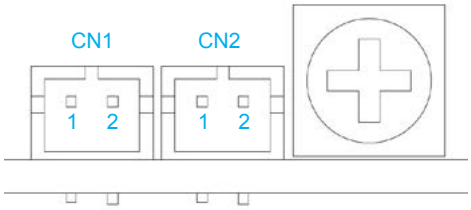

Pin Configuration and Functions of CN1, CN2

Pin No.	Function	
1	VB	Voltage Balance
2	CB	Current Balance

Matching connectors and terminals

Connector	Housing		Terminal	Mfr
CN1	S2B-PH-K-S	PHR-2	Real : SPH-002T-P0.5S Loose : BPH-002T-P0.5S	J.S.T.
CN2				

Assembling and Installation Method

Installation method

■The screw should be inserted up to 6mm max from outside of the power supply to keep a distance between inside parts and an isolation.

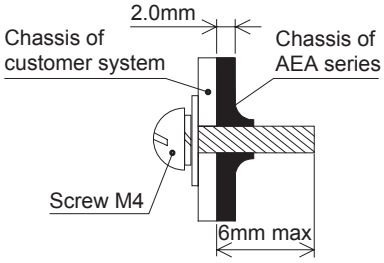

■When two or more power supplies are used side by side, position them with proper intervals to allow enough air ventilation. Ambient temperature around each power supply should not exceed the temperature range shown in “derating”.

■Fix firmly, considering weight, though it can be used by the installation method shown in right figure.

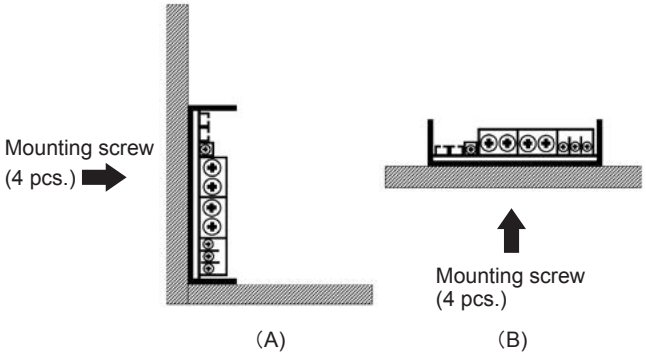

■If mounting on a metal chassis, keep at least 4 mm between the top of the power supply and the chassis for insulation between the components and the chassis.
If the distance between the top of the power supply and the chassis is less than 4mm, insert an insulating sheet with reinforced insulation between the power supply unit and metal chassis.
The following distance is not satisfactory for cooling condition. Please refer to “Derating” for cooling method.

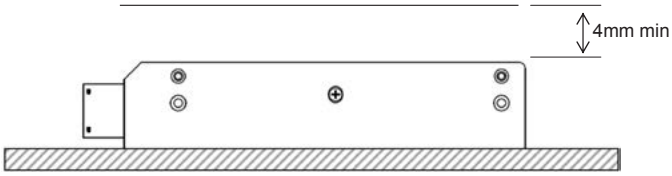

Downloaded from Arrow.com.

Derating

● AEA600F Derating curve depends on Input voltage

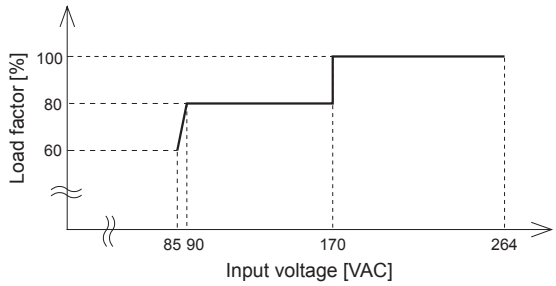

● AEA800F/1000F Derating curve depends on Input voltage

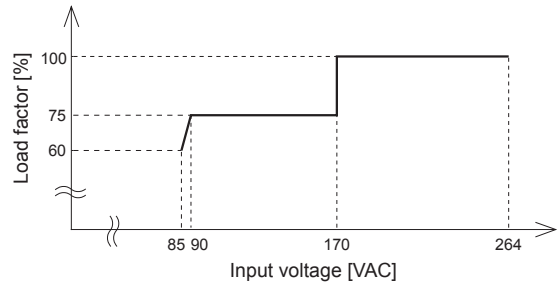

● AEA600F/800F Ambient temperature Derating Curve (convection cooling)

100% Load factor in each derating curve means the rated current (convection cooling) in Specifications.
In the hatched area, the specification of Ripple and Ripple Noise are different from other area.

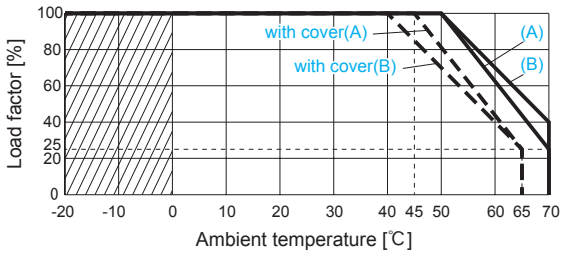

● AEA1000F Ambient temperature Derating Curve (convection cooling)

100% Load factor in each derating curve means the rated current (convection cooling) in Specifications.
In the hatched area, the specification of Ripple and Ripple Noise are different from other area.

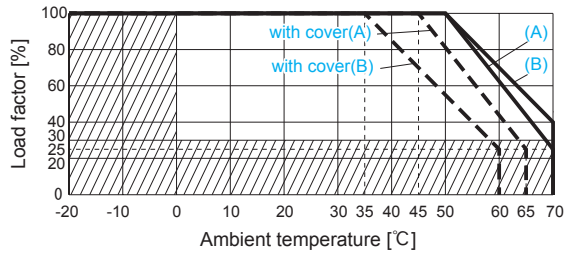

● AEA600F/800F Ambient temperature Derating Curve (forced air cooling)

100% Load factor in each derating curve means the rated current (forced air cooling) in Specifications.
In the hatched area, the specification of Ripple and Ripple Noise are different from other area.

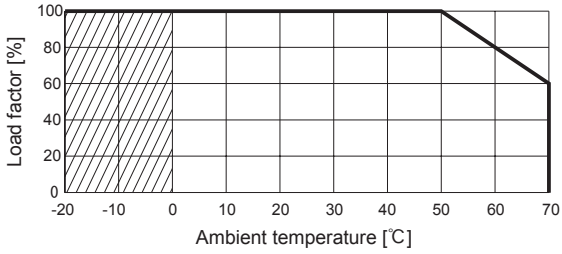

● AEA1000F Ambient temperature Derating Curve (forced air cooling)

100% Load factor in each derating curve means the rated current (forced air cooling) in Specifications.
In the hatched area, the specification of Ripple and Ripple Noise are different from other area.

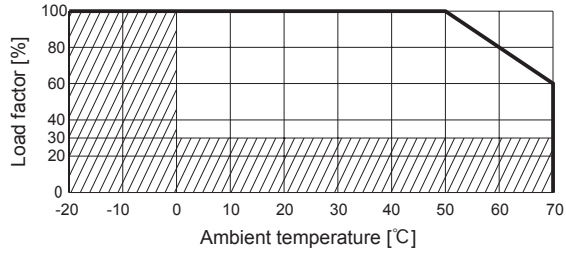

■Forced air cooling

・ AEA600F

① Please satisfy the below temperature at Point A and Point B under the forced air cooling. The Point A/B position is shown in the next figure.

・ Point A 90℃ or less and Point B 80℃ or less at Ta = 50℃

・ Point A 110℃ or less and Point B 100℃ or less at Ta = 70℃

② The forced air should be given to whole of the product.

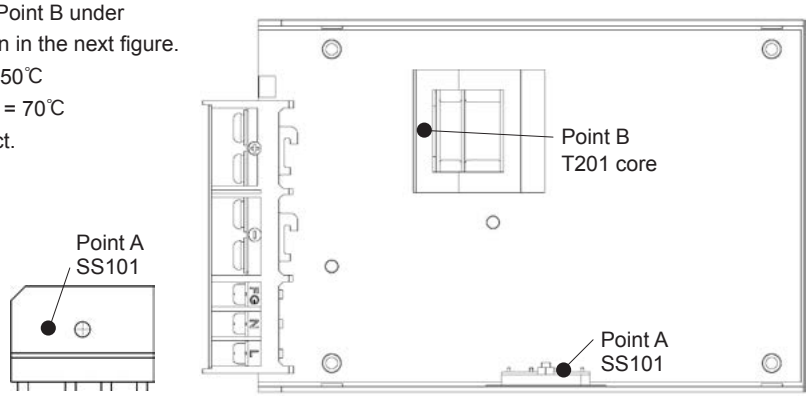

Downloaded from Arrow.com.

Derating

・AEA800F

① Please satisfy the below temperature at Point A and Point B under the forced air cooling. The Point A/B position is shown in the next figure.

・Point A 90℃ or less and Point B 80℃ or less at Ta = 50℃

・Point A 110℃ or less and Point B 100℃ or less at Ta = 70℃

② The forced air should be given to whole of the product.

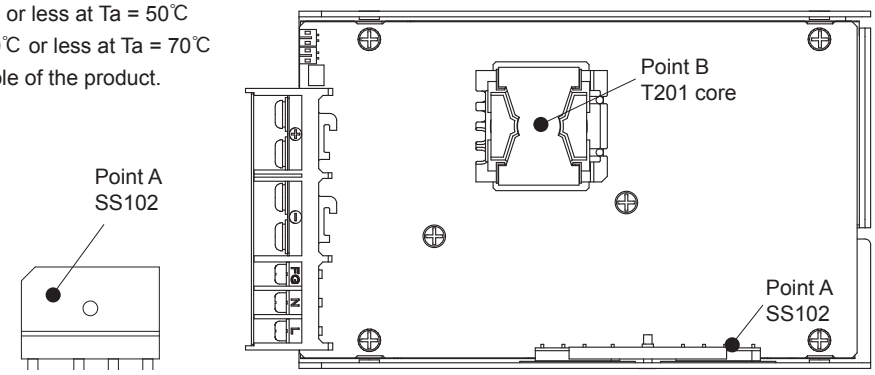

・AEA1000F

① Please satisfy the below temperature at Point A and Point B under the forced air cooling. The Point A/B position is shown in the next figure.

・Point A 90℃ or less and Point B 80℃ or less at Ta = 50℃

・Point A 110℃ or less and Point B 100℃ or less at Ta = 70℃

② The forced air should be given to whole of the product.

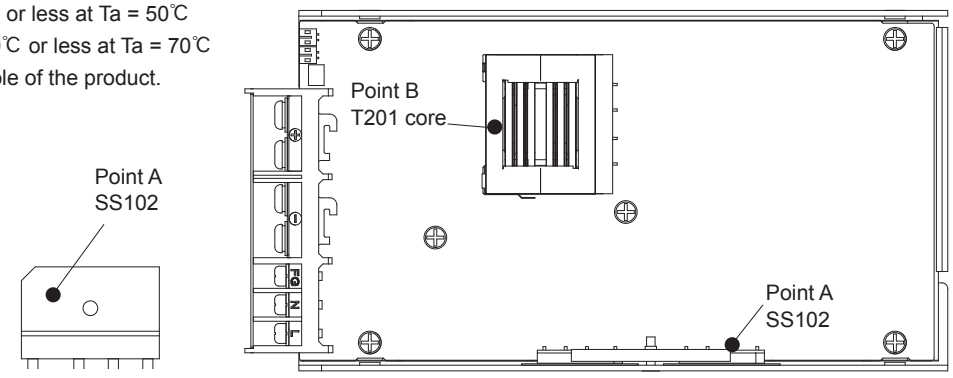

Instruction Manual

◆ It is neccessary to read the “Instruction Manual” and “Before using our product” before you use our product.

Basic Characteristics Data

Model	Circuit method	Switching frequency [kHz]	Input current [A] ＊1	Inrush current protection	PCB/Pattern			Series/Parallel operation availability	
					Material	Single sided	Double sided	Series operation	Parallel operation
AEA600F	Active filter	65	5.7 (Peak 11.1)	Relay	FR-4	-	Yes	Yes	Yes
	LLC resonant converters	70 - 200							
AEA800F	Active filter	65	6.6 (Peak 14.4)	Relay	FR-4	-	Yes	Yes	Yes
	LLC resonant converters	60 - 200							
AEA1000F	Active filter	65	8.4 (Peak 20.6)	Relay	FR-4	-	Yes	Yes	Yes
	LLC resonant converters	70 - 200							

＊1 The value of input current is at ACIN 100V and rated load (peak).

Downloaded from Arrow.com.