© 2024 TE Connectivity. All Rights Reserved.

PN 2-6 & 1-1

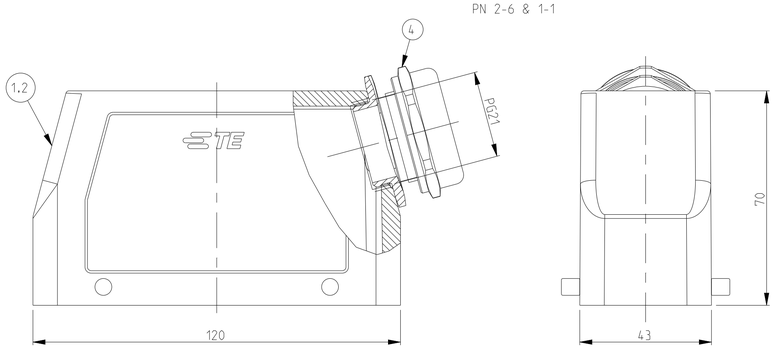

PN 1-3

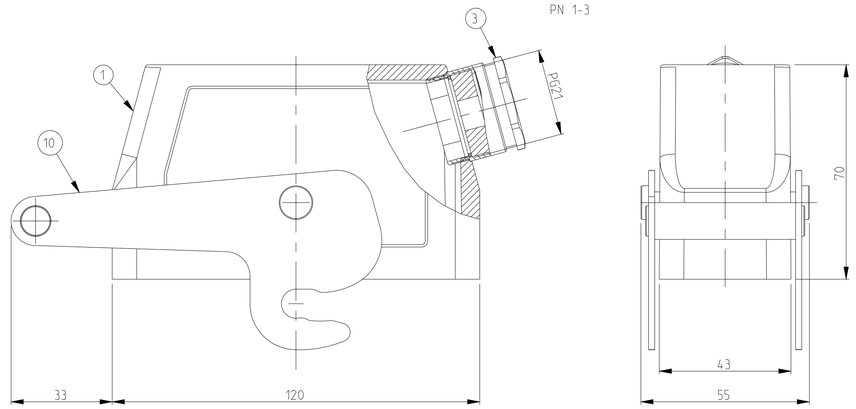

PN 2-1 & 1-1

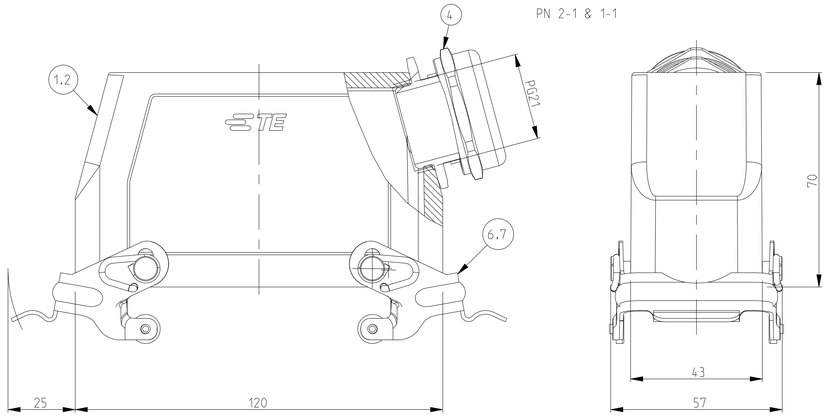

PN 2-3

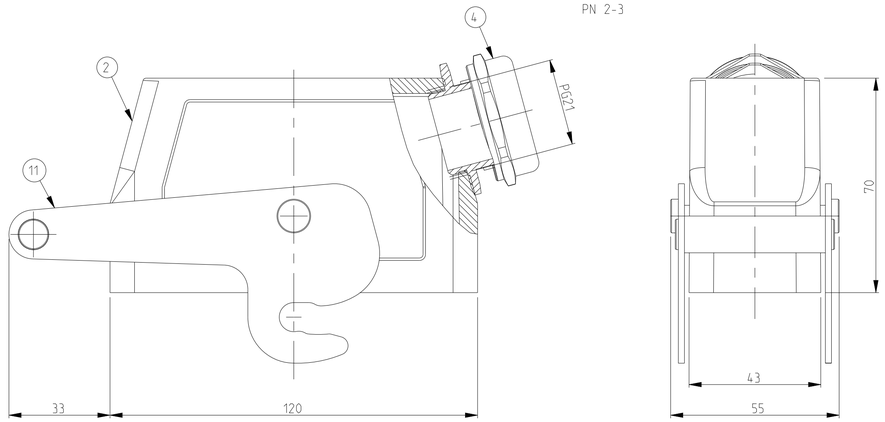

PN 1-7

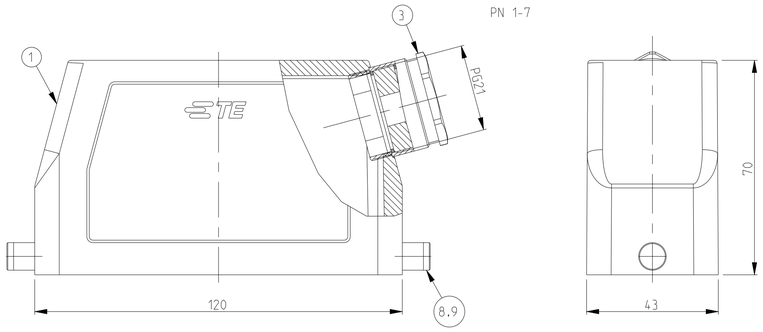

PN 2-7

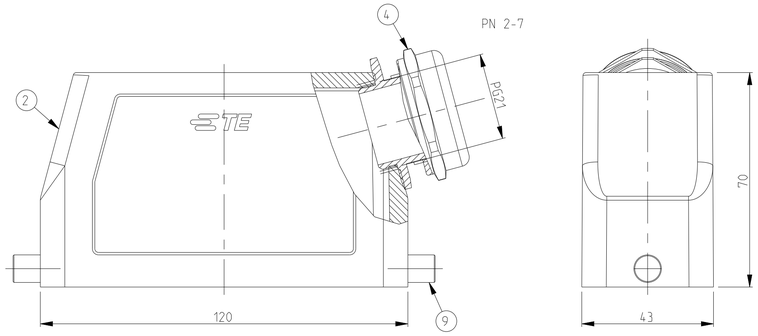

REVISIONS

P	LTR	DESCRIPTION	DATE	DWN	APVD
	B2	Released as per ECR-07-019955	22.08.07	SK	TS
	B3	REVISED AS PER ECO-09-027197	14DEC2009	KK	AEG
	B4	REVISED PER ECR-24-207461	06JUN2024	RK	WR

B2 Released as per ECR-07-019955 22.08.07 SK TS

NOTES.

1 Material:Housing:Aluminium Diecasting Alloy

2 Surface:Varnish grey

3 Varnish on the inside not necessary

4 Packaging
Quantity 5 Pieces in a box

5 OBSOLETE PARTS: OBSOLETE CIS STREAMLINING PER D.RENAUD/D.SINISI

6 OBSOLETE

PN 2-7

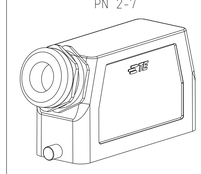

SCALE1:2

PN 1-3

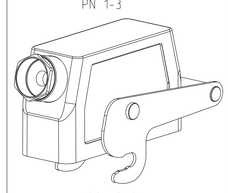

SCALE1:2

PN 2-3

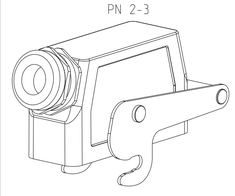

SCALE1:2

PN 2-6 & 1-1

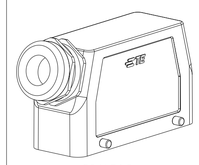

SCALE1:2

PN 2-1 & 1-1

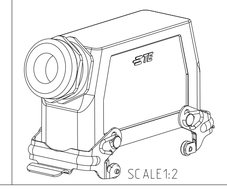

SCALE1:2

PN 1-7

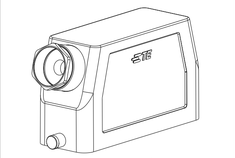

SCALE1:2

2-3	1-3	2-7	1-7	2-1	1-1	2-6	1-6	DESCRIPTION	MATERIAL	SURFACE	COLOR	ITEM NO	REMARKS
1				5				ZB-Central clip	Stainless steel	-		11	
	1							ZB-Central clip	Steel	Zinc plated	Blue	10	
		2						VS-Clip bolt	Stainless steel	-		9	
			2					VS-Clip bolt	Steel	Zinc plated	Blue	8	
				2				VS-Locking clip	Stainless steel	-		7	
					2			VS-Locking clip	Steel	Zinc plated	Blue	6	
						4		VS-Locking clip bolt	Stainless steel	-		5	
1		1		1		1		Cable connection round	Brass	Nickel plated		4	
	1		1		1		1	PG-Gland fitting pg21	Brass	Nickel plated		3	
1		1		1		1		Hood HB.24.Pg.1.21	Aluminium	Aluminiumoxide	Black	2	
	1		1		1		1	Hood HB.24.Pg.1.21	Aluminium	-	Grey	1	

DESCRIPTION
HB.24.Sts.1.21
HB-K.24.Sts.1.21
HB.24.Sts-VS.1.21
HB-K.Sts-VS.1.21
HB.24.Sts-GR.1.21
HB-K.24.Sts-GR.1.21
HB-Z.24.Sts.ZB.1.21
HB-K/Z.24.Sts-ZB.1.21

THIS DRAWING IS A CONTROLLED DOCUMENT.

DIMENSIONS: mm

TOLERANCES UNLESS OTHERWISE SPECIFIED:
n.120 REF
n.120 ISO-mm-f
n.DIN 9001-DIC
0 PLC ±
1 PLC ±
2 PLC ±
3 PLC ±
4 PLC ±
ANGLES ±

MATERIAL

FINISH

DWN Schweiger 17.07.1997
CHK Schnurfeil 17.07.1997
APVD -
PRODUCT SPEC 108-74003
APPLICATION SPEC 114-74004
WEIGHT

TE Connectivity

NAME Hood HB.24

SIZE	CAGE CODE	DRAWING NO	RESTRICTED TO
A1	00779	C-1102314	-

CUSTOMER DRAWING

SCALE 1:1 SHEET 1 OF 1 REV B4

4805 (3/13)

Downloaded from Arrow.com.