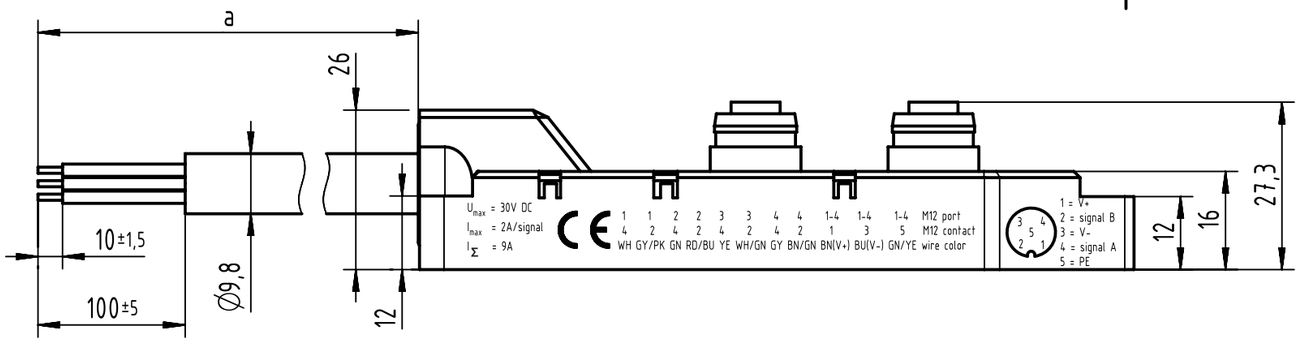

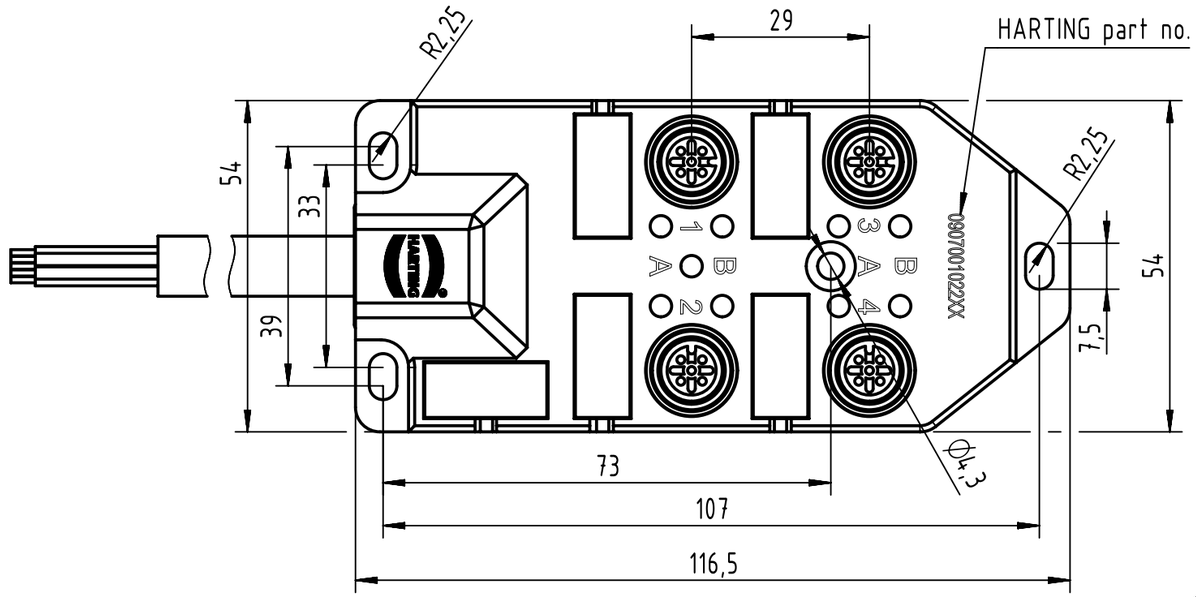

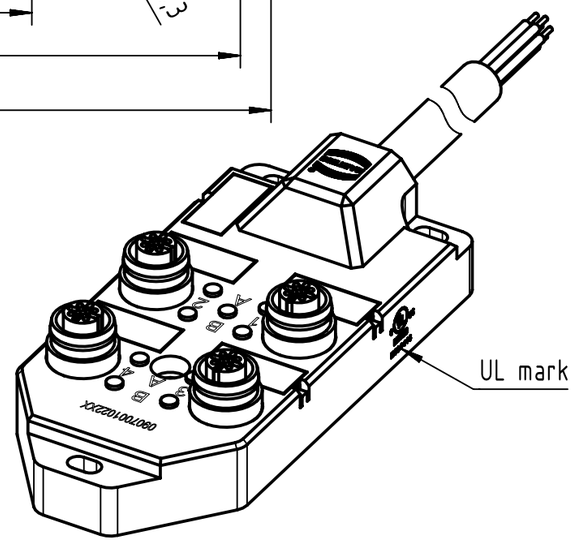

c UL us LISTED
E500416

Loading plan

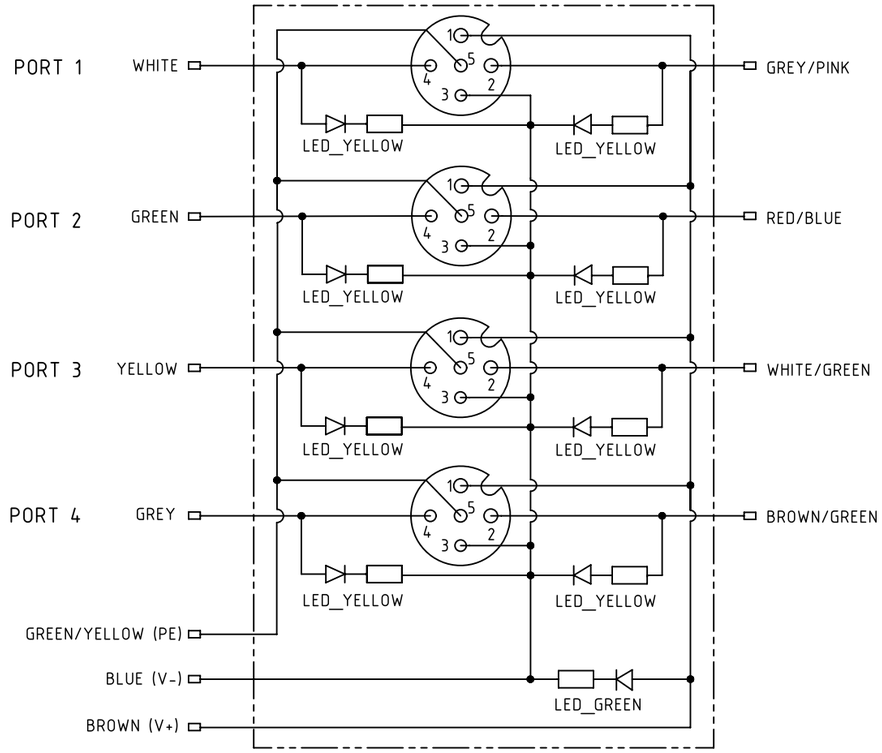

- Protection level: IP67
- Temperature range: -30°C ... +80°C

Cont. no	HARTING part no.	Type of cable	Dim. a[m]
6	090700102250	PVC, 3xAWG18 + 8xAWG22, black	10
5	090700102251		5
4	090700102253		2
3	090700102200	PUR, 3xAWG18 + 8xAWG22, black	10
2	090700102201		5
1	090700102203		2

All Dimensions in mm | Tech. Character. | Free size tol. | According to production drawing

All rights reserved

Department HCS - RO

HARTING Customised Solutions
D-32339 Espelkamp

Created by	Inspected by	Standardisation	Date	State
405181 Hadar	COSTEA Costea	MUNTEANV Muntean	2021-03-26	Final Release

Title: har-SAB M12/4/5p PAC

Doc-Key / ECM-Nr.: 100689641/UGD/000/G 500000191951

Type: TB | Number: 0907001022XX | Rev.: G | Page: 1/1

A3

Downloaded from Arrow.com.