DRW NO.	SH	REV
800-7552-500	1	B

ZONE	REV	SCR NUMBER	DESCRIPTION	BY	DATE	APPROVED
ALL	A	CSAS-7J6KE7.VER01	NEW RELEASE	HCL-SP	09/11/2008	C.SAMMIS
	B	CSAS-84CJLV.VER02	ADDED 3/16" LENGTH SCREW	HCL-RK	04/13/2010	U.MAYORAL

TABLE 1

SI.NO	PART NUMBER	REV	DESCRIPTION	L
1	800-7552-000	B	SCREW, CROSS REC, PHILIPS PAN HD, SELF TAPPING, THREAD FORMING #2-32 X 1/4 LONG	1/4
2	800-2811-000	B	SCREW, CROSS REC, PHILIPS PAN HD, SELF TAPPING, THREAD FORMING #2-32 X 5/16 LONG	5/16
3	800-2002-000	B	SCREW, CROSS REC, PHILIPS PAN HD, SELF TAPPING, THREAD FORMING #2-32 X 3/8 LONG	3/8
4	800-8604-100	B	SCREW, CROSS REC, PHILIPS PAN HD, SELF TAPPING, THREAD FORMING #2-32 X 1/2 LONG	1/2
5	800-9863-000	B	SCREW, CROSS REC, PHILIPS PAN HD, SELF TAPPING, THREAD FORMING #2-32 X 9/16 LONG	9/16
6	800-4980-000	B	SCREW, CROSS REC, PHILIPS PAN HD, SELF TAPPING, THREAD FORMING #2-32 X 3/16 LONG	3/16

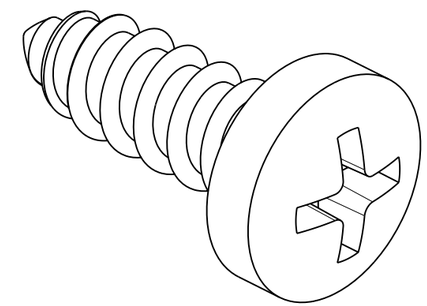

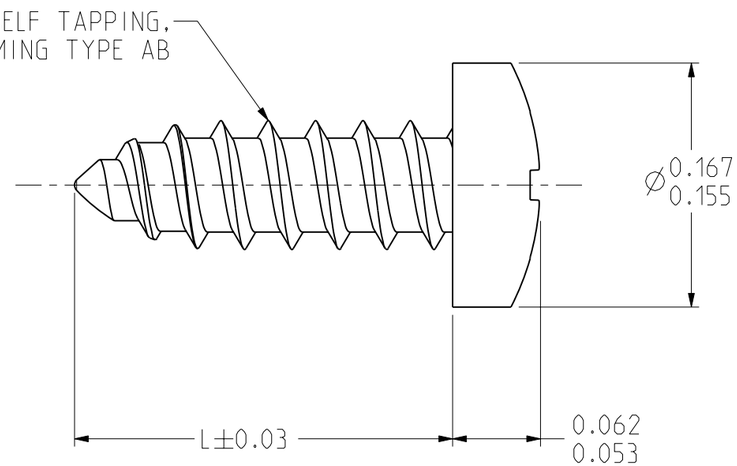

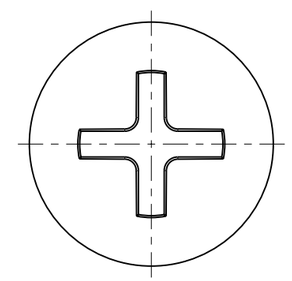

NOTES:

1) MATERIAL: 300 SS
2) FINISH: CLEAN AND DRY
3) MATERIAL AND FINISH TO COMPLY WITH EUROPEAN UNION RESTRICTION OF HAZARDOUS SUBSTANCES DIRECTIVE 2002/95/EU (RoHS)

TOLERANCES	
.00	-
.000	-
.0000	-
ANGLES	-

DESIGN 08/29/2008 C.SAMMIS
DRAWN 09/11/2008 HCL-SP
CHK 09/11/2008 C.SAMMIS
APVD 09/11/2008 C.SAMMIS

MATERIAL:

INTERPRET PER ASME Y14.5M

CODE IDENT 31413

UNLESS OTHERWISE SPECIFIED DIMENSIONS ARE IN INCHES

THESE DRAWINGS AND SPECIFICATIONS ARE THE PROPERTY OF AMPHENOL CORPORATION AND SHALL NOT BE REPRODUCED OR COPIED OR USED AS THE BASIS FOR THE MANUFACTURE OR SALE OF APPARATUS WITHOUT THE WRITTEN PERMISSION OF AMPHENOL CORPORATION.

Amphenol TCS
A Division of Amphenol Corporation
200 Innovative Way, Nashua, NH 03062 603.879.3000

TITLE: CROSS RECESSED PAN HEAD, SS SELF TAPPING

PART NO.: SEE TABLE 1 — REV

DRAWING NO.: 800-7552-500 — REV B

Pro/E type: 800-7552-000 — 1.2
Pro/E DRAWING: 800-7552-500 — B.0

SIZE B | SCALE 10/1 | SHEET 1 OF 1

DRW NO. 800-7552-500 | SH 1 | REV B

Downloaded from Arrow.com.