Data Sheet | Item Number: 713-1405/037-000

THT male header, 2-row; 0.8 x 0.8 mm solder pin; straight; 100% protected against mis-mating; Levers; Pin spacing 3.5 mm; 10-pole; black

https://www.wago.com/713-1405/037-000

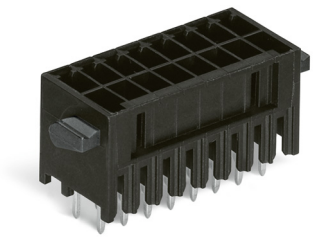

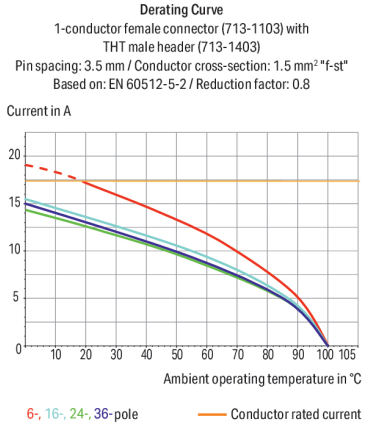

Color: ■ black

Similar to illustration

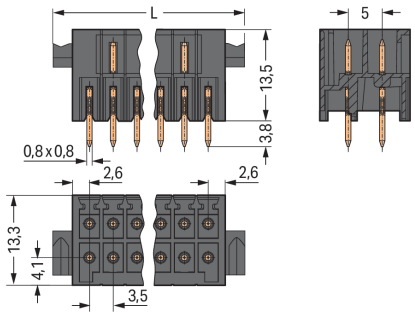

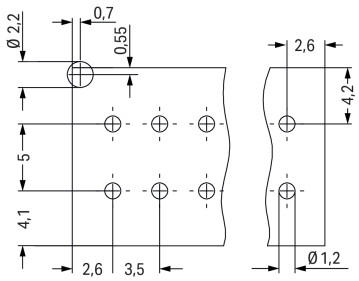

Dimensions in mm
L = [(pole no./2) – 1] x pin spacing + 11.6 mm

Male connector, 713 Series, solder pin dimensions 0.8 x 0.8 mm

Our male connector (item number 713-1405/037-000) ensures effortless electrical installations. The dimensions are (25.6 x 17.3 x 13.3) mm (width x height x depth).

Tin is used for coating the contact surfaces. The pcb connector is designed for THT soldering.

Downloaded from Arrow.com.

Notes

Safety Information	The *MCS – MULTI CONNECTION SYSTEM* includes connectors without breaking capacity in accordance with DIN EN 61984. When used as intended, these connectors must not be connected/disconnected when live or under load.When used as intended, these connectors must not be connected/disconnected when live or under load. The circuit design should ensure header pins, which can be touched, are not live when unmated.
Variants:	Other pole numbers Other solder pin lengths Gold-plated or partially gold-plated contact surfaces Other versions (or variants) can be requested from WAGO Sales or configured at https://configurator.wago.com/.

Electrical data

Ratings per	IEC/EN 60664-1		
Overvoltage category	III	III	II
Pollution degree	3	2	2
Nominal voltage	80 V	160 V	250 V
Rated impulse withstand voltage	2.5 kV	2.5 kV	2.5 kV
Rated current	10 A	10 A	10 A

Approvals per	UL 1059		
Use group	B	C	D
Rated voltage	150 V	50 V	-
Rated current	10 A	10 A	-

Approvals per	CSA		
Use group	B	C	D
Rated voltage	150 V	-	-
Rated current	12 A	-	-

Connection Data

Total number of potentials	10
Number of connection types	1
Number of levels	2

Connection 1	
Pole number	10

Physical data

Pin spacing	3.5 mm / 0.138 inches
Width	25.6 mm / 1.008 inches
Height	17.3 mm / 0.681 inches
Height from the surface	13.5 mm / 0.531 inches
Depth	13.3 mm / 0.524 inches
Solder pin length	3.8 mm
Solder pin dimensions	0.8 x 0.8 mm
Drilled hole diameter	1.2 $^{(+0.1)}$ mm

Mechanical data

Variable coding	Yes
Anti-rotation protection	Yes

Downloaded from Arrow.com.

Plug-in connection

Contact type (pluggable connector)	Male connector/plug
Connector (connection type)	for PCB
Mismating protection	Yes
Mating direction to the PCB	90 °
Locking of plug-in connection	Locking lever

PCB contact

PCB contact	THT
Solder pin arrangement	over the entire male connector (in-line)
Number of solder pins per potential	1

Material data

Note (material data)	Information on material specifications can be found here
Color	black
Material group	I
Insulation material (main housing)	Polyphthalamide (PPA GF)
Flammability class per UL94	V0
Contact material	Electrolytic copper (E_{Cu})
Contact Plating	Tin
Fire load	0.03 MJ
Weight	2.9 g

Environmental requirements

Limit temperature range	-60 … +100 °C
Processing temperature	-35 … +60 °C

Commercial data

Product Group	3 (Multi Conn. System)
PU (SPU)	50 pcs
Packaging type	Box
Country of origin	PL
GTIN	4045454808372
Customs tariff number	85366930000

Product Classification

UNSPSC	39121409
eCl@ss 10.0	27-44-04-02
eCl@ss 9.0	27-44-04-02
ETIM 9.0	EC002637
ETIM 10.0	EC002637
ECCN	NO US CLASSIFICATION

Downloaded from Arrow.com.

Environmental Product Compliance

RoHS Compliance Status	Compliant,No Exemption

Approvals / Certificates

General approvals

Approval	Standard	Certificate Name
CB DEKRA Certification B.V.	IEC 61984	NL-102427
CSA CSA Group	C22.2	2315087
KEMA/KEUR DEKRA Certification B.V.	EN 61984	71-133740

Downloads

Environmental Product Compliance

Compliance Search

Environmental Product Compliance
713-1405/037-000

Documentation

Additional Information

Technical Section	03.04.2019	pdf 2027.26 KB	

CAD/CAE-Data

CAD data

2D/3D Models
713-1405/037-000

CAE data

ZUKEN Portal
713-1405/037-000

PCB Design

Symbol and Footprint via SamacSys
713-1405/037-000

Symbol and Footprint via Ultra Librarian
713-1405/037-000

Downloaded from Arrow.com.

1 Compatible Products

1.1 System counterpart

1.1.1 Female connector/socket

Item No.: 713-1105/037-000
1-conductor female connector, 2-row; CAGE CLAMP®; 1.5 mm²; Pin spacing 3.5 mm; 10-pole; 100% protected against mismating; Levers; black

Item No.: 713-1105/037-047
1-conductor female connector, 2-row; CAGE CLAMP®; 1.5 mm²; Pin spacing 3.5 mm; 10-pole; 100% protected against mismating; Levers; direct marking; black

Item No.: 713-1105/037-9037
1-conductor female connector, 2-row; CAGE CLAMP®; 1.5 mm²; Pin spacing 3.5 mm; 10-pole; 100% protected against mismating; Levers; direct marking; black

Item No.: 713-1105/037-000/036-000
1-conductor female connector, 2-row; CAGE CLAMP®; 1.5 mm²; Pin spacing 3.5 mm; 10-pole; 100% protected against mismating; Levers; Strain relief plate; 1,50 mm²; black

Item No.: 713-1105/037-9037/036-000
1-conductor female connector, 2-row; CAGE CLAMP®; 1.5 mm²; Pin spacing 3.5 mm; 10-pole; 100% protected against mismating; Levers; Strain relief plate; direct marking; 1,50 mm²; black

Item No.: 713-1105/037-9037/032-000
1-conductor female connector, 2-row; CAGE CLAMP®; 1.5 mm²; Pin spacing 3.5 mm; 10-pole; 100% protected against mismating; Levers; Strain relief plate; direct marking; black

1.2 Optional Accessories

1.2.1 Coding

1.2.1.1 Coding

Item No.: 714-101
Coding key; orange

Installation Notes

Coding

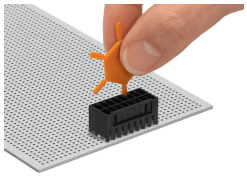

Coding a male header by inserting a coding pin.

Downloaded from Arrow.com.