ITEM NO.	PART NUMBER	DESCRIPTION	QTY.	NOTES
1	50-00024	Connector, dc plug, 5.5x2.1xL23 mm, molding style, spring contacts	1	
2	50-00025	Connector, dc jack, 5.5x2.1xL17.4 mm, molding style	1	
3	30-00415	Wire, 2C TS, 18 AWG, UL2468, 300V, 80°C, 4.4 mm, VW-1, PVC, 87A, red and black	1	
4	24-00003	Overmold, PVC, black	1	
5	24-00004	Overmold, PVC, black	1	

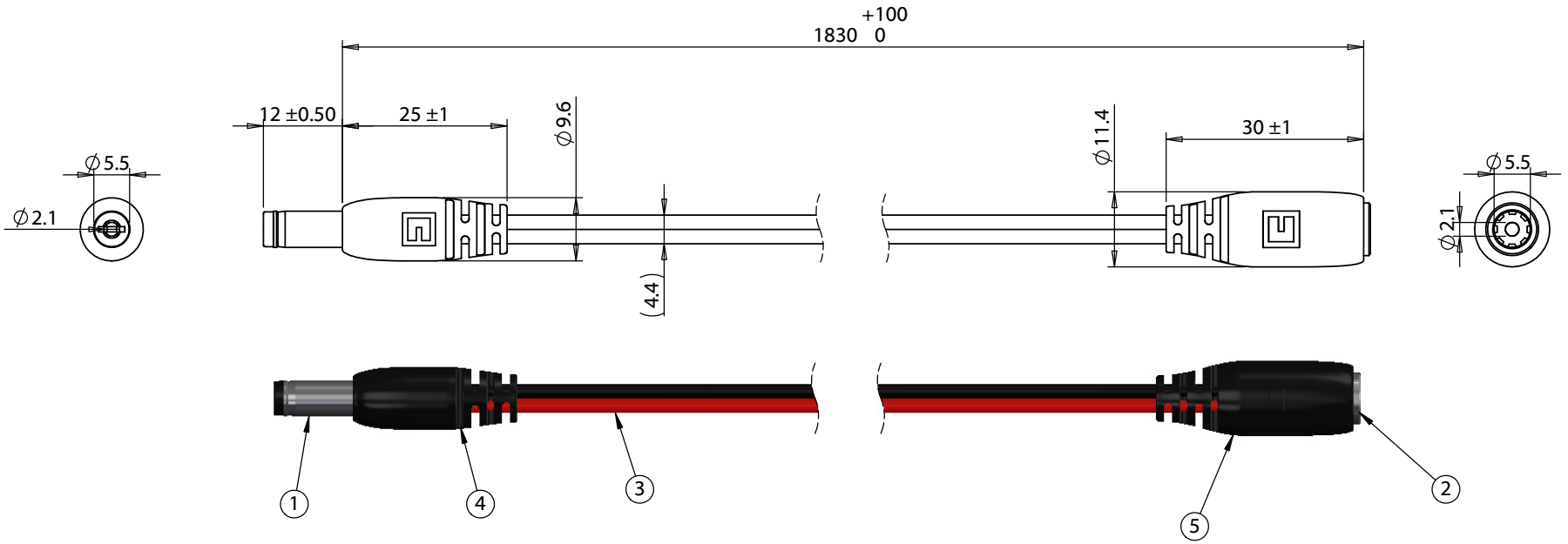

Ratings
Maximum Operating Voltage: 48 V
Maximum Operating Current: 7 A

Operating Temperature Range
-25 ~ 80 °C, relative humidity of 85% or less

Wiring diagram		
50-00024	Wire	50-00025
Center	Red	Center
Sleeve	Black	Sleeve

Revision:	Date:	Description:
A	7/31/2014	Initial release
A1	4/30/2015	Updated notes section

Prepared: CR Digitally signed by CR Date: 2026.03.04 08:49:46 -08'00'

Verified: KM Digitally signed by KM Date: 2026.03.05 16:23:46 -08'00'

Dimensions are in millimeters.
Tolerances:
X: ± 0.5 mm
X.X: ± 0.3 mm
X.XX: ± 0.05 mm

Notes:

RoHS compliant

Function test: no open, no short circuit, no intermittent

Description:

Cable, 1830 mm, 5.5x2.1x12 mm 50-00024 dc plug to 5.5x2.1 50-00025 jack, 18 AWG, 30-00415 R-B

TENSILITY
tel 1.541.323.3228 800 877.670.7118
fax 1.541.323.4202 web tensility.com

Size: A
Part number: 10-01782
Scale: 1:1
Sheet 1 of 1

5 4 3 2 1

To see a custom version of this cable assembly, call Tensility at 541-323-3228 or email engineering@tensility.com

Downloaded from Arrow.com.

Materials
1. Insulator: PBT + 15% glass fiber, UL 94 V-0, black
2. Terminal: C5191 phosphor bronze, 2 µm nickel plated
3. Shell: C2700 brass, 2 µm nickel plated

Electrical Requirements
Dielectric strength: 1 min @ 500 Vac
Insulation resistance: 100 MΩ @ 500 Vdc
Contact resistance: 30 mΩ maximum

Mechanical Requirements
Insertion force: 0.3-3 kgf
Withdrawal force: 0.3-3 kgf
Life cycle: 5000 mating cycles while maintaining 0.3-2.0 kgf min. insertion force, 0.2-1.5 kgf min. withdrawal force and less than 100 mΩ contact resistance.

Environmental Requirements
Heat test: 70 °C, relative humidity 70-85% for 96 hours while maintaining contact resistance: 100 mΩ maximum, insulation resistance: 50 MΩ minimum, without looseness or deformation
Humidity test: 40 °C, relative humidity 90-100% for 96 hours, while maintaining dielectric strength: 1 min @ 500 Vac, insulation resistance: 50 MΩ @ 500 Vdc, contact resistance: 100 mΩ maximum
Salt spray test: 35±2 °C, relative humidity 90-95%, 5% NaCl mist for 24 hrs. Wash parts after test. Maintain mechanical requirements and a contact resistance of less than 80 mΩ.



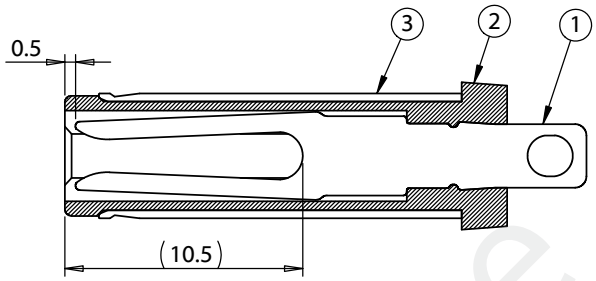

SECTION A-A

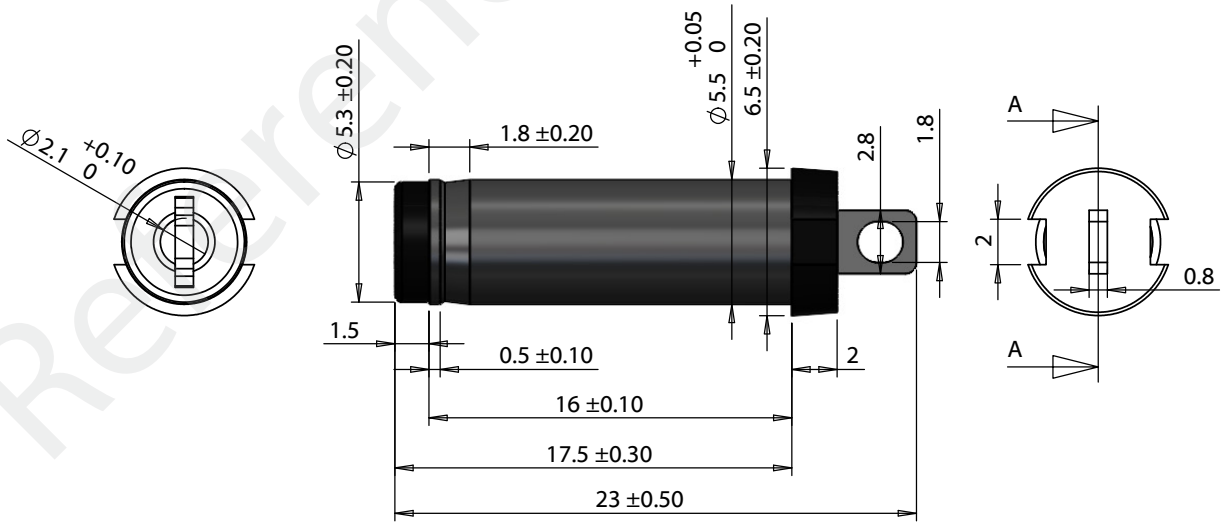

Reference

Revision:	Date:	Description:
A	09/02/2009	Initial release
A1	11/09/2012	Added test data
A2	12/29/2015	Modified tolerances
A3	10/03/2019	Increased connector ratings
A4	02/06/2026	Updated shell material

Prepared:
KM
Digitally signed by KM
Date: 2026.02.06 12:05:22 -08'00'

Verified:
KW
Digitally signed by KW
Date: 2026.02.06 12:07:47 -08'00'

Dimensions are in millimeters.
Tolerances:
X: ± 0.3 mm
X.X: ± 0.1 mm
X.XX: ± 0.05 mm

Notes:
RoHS compliant

Function test: no open, no short circuit, no intermittent

Description:
Connector, dc plug, 5.5x2.1xL23 mm, molding style, spring contacts, LF

TENSILITY
tel 1.541.323.3228 800 877.670.7118
fax 1.541.323.4202 web tensility.com

Size: A
Part number: 50-00024
Scale: 3:1
Sheet 1 of 2

5 4 3 2 1

Downloaded from Arrow.com.

Ratings
Maximum Operating Voltage: 48 Vdc
Maximum Operating Current: 8.5 A

Operating Temperature Range
-25° to 120 °C, relative humidity of 85% or less

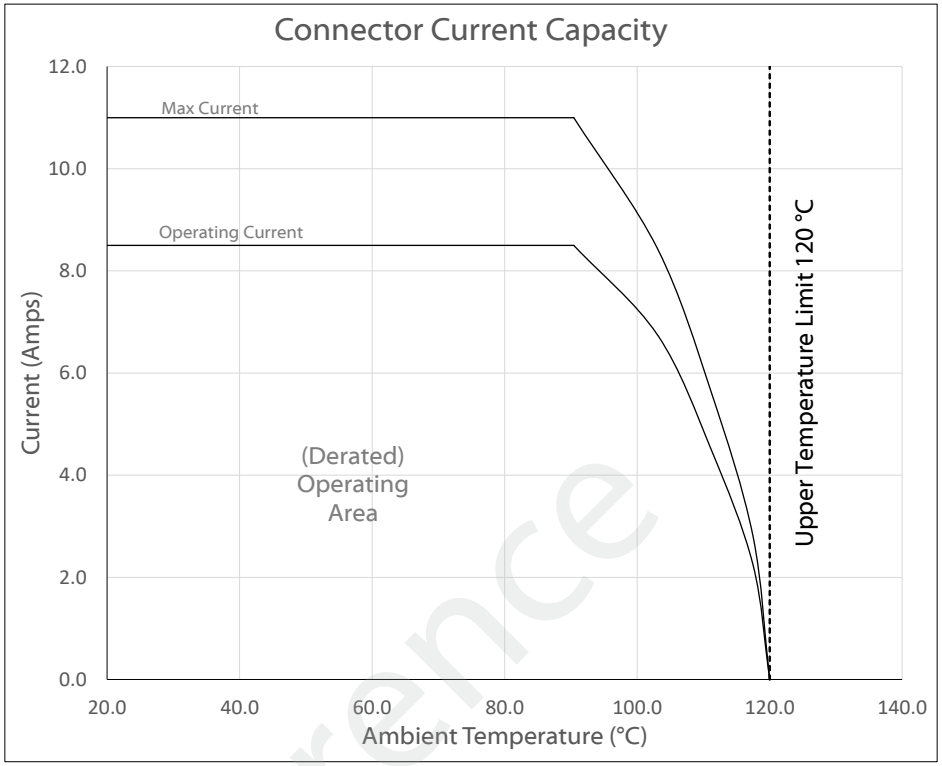

Testing based on IEC 60512-5-2. Max current curve generated with isolated test article under controlled environmental conditions, and does not take into account external factors such as housings,mating cables, or other circuitry. Operating current curve (derated by 20% of maximum values) accounts for external factors, and manufacturing variation.

Reference

Revision:	Date:	Description:
A	09/02/2009	Initial release
A1	11/09/2012	Added test data
A2	12/29/2015	Modified tolerances
A3	10/03/2019	Increased connector ratings
A4	02/06/2026	Updated shell material

Prepared: KM
Digitally signed by KM
Date: 2026.02.06 12:05:36 -08'00'

Verified: KW
Digitally signed by KW
Date: 2026.02.06 12:07:58 -08'00'

Dimensions are in millimeters.
Tolerances:
X: ± 0.3 mm
X.X: ± 0.1 mm
X.XX: ± 0.05 mm

Notes:
RoHS compliant

Function test: no open, no short circuit, no intermittent

Description:
Connector, dc plug, 5.5x2.1xL23 mm, molding style, spring contacts, LF

TENSILITY
tel 1.541.323.3228 800 877.670.7118
fax 1.541.323.4202 web tensility.com

Size: A
Part number: 50-00024
Scale: 3:1
Sheet 2 of 2

5 4 3 2 1

Downloaded from Arrow.com.

Materials
1. Insulator, PBT + 15% GF, UL 94 HB, black
2. Pin, C3604 brass, 2 µm nickel plated
3. Shell, C3604 brass, 2 µm nickel plated
4. Spring contact, C5191 phosphor bronze, 2 µm nickel plated

Electrical requirements
Dielectric strength: 1 min @ 500 Vac
Insulation resistance: 100 MΩ @ 500 Vdc
Contact resistance: 30 mΩ or less

Mechanical requirements
Insertion force: 0.3-3 kgf
Withdrawal force: 0.3-3 kgf
Durability: 5000 mating cycles while maintaining; 0.3 kgf min. insertion force, 0.2 kgf min. withdrawal force and a less than 100 mΩ contact resistance.

Environmental requirements
Damp test: 40 °C, RH 90-100% for 96 hrs. Cool to ambient and recover for 2 hours. Maintain dielectric strength of 500 Vac for 1 min, insulation resistance of 50 MΩ @ 500 Vdc minimum and a contact resistance of 100 mΩ or less.

Dry test: 70 °C, RH 70-85% for 96 hrs. Cool to ambient and recover for 2 hours. Maintain insulation resistance of 50 MΩ @ 500 Vdc minimum and a contact resistance of 100 mΩ or less.

Salt spray test: 35 °C, RH 90-95%, 5% NaCl mist for 24 hrs. Wash parts after test. Maintain mechanical requirements and a contact resistance of less than 80 mΩ.



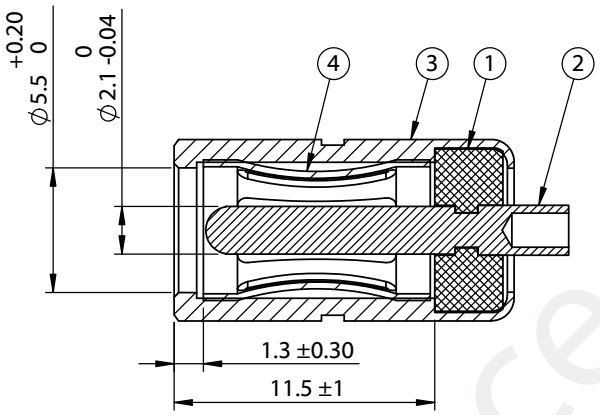

SECTION A-A
SCALE 3 : 1

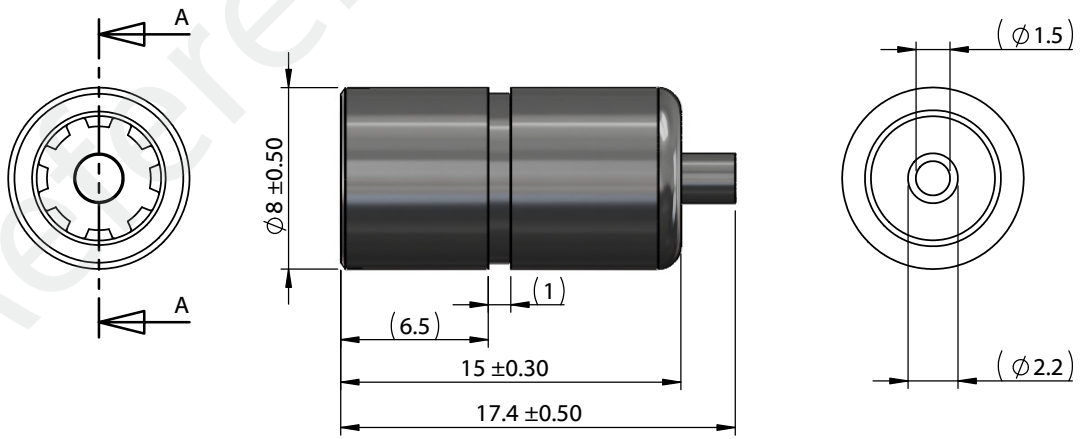

Reference

Revision:	Date:	Description:
A	09/02/2009	Intiial release
A1	11/09/2012	Added test data
A2	10/29/2015	Modifed electrical requirements
A3	04/19/2016	Modified tolerances
A4	05/22/2018	Changed material and added test data

Prepared: CR
Digitally signed by CR
Date: 2026.01.20 11:11:04 -08'00'

Verified: KM
Digitally signed by KM
Date: 2026.02.24 15:03:57 -08'00'

Dimensions are in millimeters.
Tolerances:
X: ± 0.5 mm
X.X: ± 0.3 mm
X.XX: ± 0.05 mm

Notes:
RoHS and REACH compliant

Function test: no open, no short circuit, no intermittent

Description:
Connector, dc jack, 5.5x2.1xL17.4 mm, molding style

TENSILITY
tel 1.541.323.3228 800 877.670.7118
fax 1.541.323.4202 web tensility.com

Size: A
Part number: 50-00025
Scale: 4:1
Sheet 1 of 2

5 4 3 2 1

Downloaded from Arrow.com.

Ratings
Operating Voltage: 48 Vdc
Max Current: 7 A

Operating Temperature Range
-25° to 120 °C, relative humidity of 85% or less

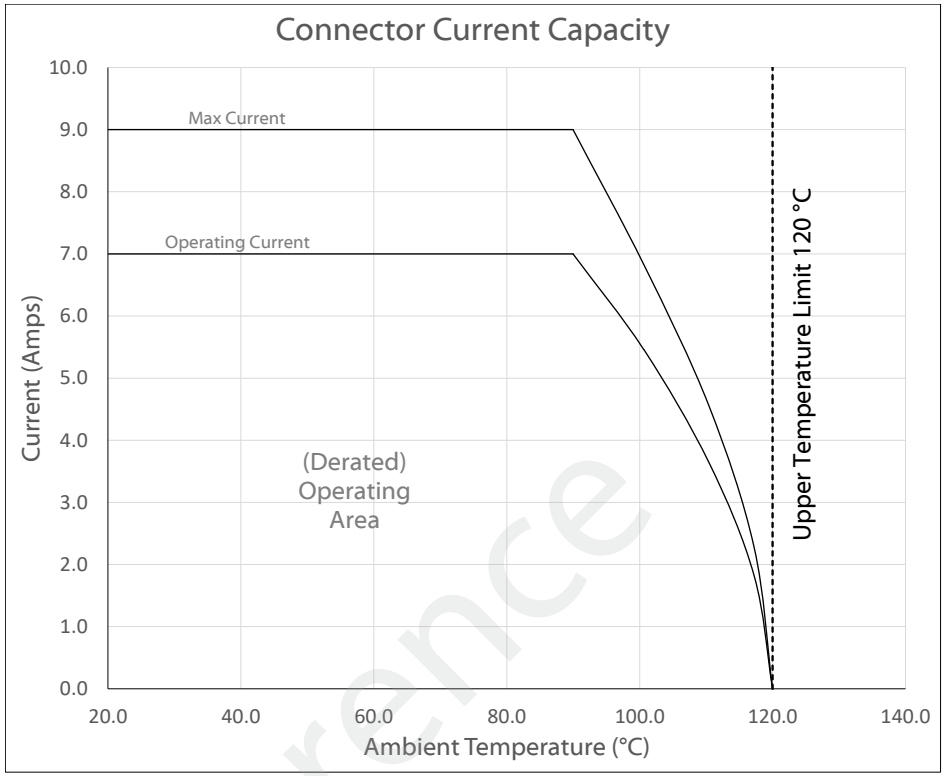

Testing based on IEC 60512-5-2. Max current curve generated with isolated test article under controlled environmental conditions, and does not take into account external factors such as housings,mating cables, or other circuitry. Operating current curve (derated by 20% of maximum values) accounts for external factors, and manufacturing variation.

Reference

Revision:	Date:	Description:
A	09/02/2009	Intiial release
A1	11/09/2012	Added test data
A2	10/29/2015	Modifed electrical requirements
A3	04/19/2016	Modified tolerances
A4	05/22/2018	Changed material and added test data

Prepared: CR
Digitally signed by CR
Date: 2026.01.20 11:11:26 -08'00'

Verified: KM
Digitally signed by KM
Date: 2026.02.24 15:04:21 -08'00'

Dimensions are in millimeters.
Tolerances:
X: ± 0.5 mm
X.X: ± 0.3 mm
X.XX: ± 0.05 mm

Notes:
RoHS and REACH compliant

Function test: no open, no short circuit, no intermittent

Description:
Connector, dc jack, 5.5x2.1xL17.4 mm, molding style

TENSILITY
tel 1.541.323.3228 800 877.670.7118
fax 1.541.323.4202 web tensility.com

Size: A
Part number: 50-00025
Scale: 4:1
Sheet 2 of 2

5 4 3 2 1

Downloaded from Arrow.com.

Ratings
Voltage: 300 V
Temperature: -25 ~ 80 °C
Flammability: VW-1

Conductor
Conductor count: 2
Gauge: 18 AWG 0.82 mm²
Material: tinned copper strands
Strand size: ∅0.16x41
Resistance at 20 °C: 23.2 Ω /km max

Insulation
Material: PVC
Color: red, black
Diameter: 4.4 ±0.20 mm
Nominal thickness: 0.50 mm
Resistance at 20 °C: 10 MΩ /km min

Wire marking: E339579 UL AWM STYLE 2468 18 AWG 80°C 300V VW-1 - - - cUL AWM I A 80°C 300V FT1 TENSILITY

Tests
Insulation tensile strength: 2.11 kgf/mm²
Jacket tensile strength: 1.05 kgf/mm²
After aging at 113 ±2 °C for 7 days:
Minimum tensile strength 70 % original
Minimum elongation 65 % original
Heat shock: 121 ±1 °C /1 hour, no observed degradation
Deformation: 121 ±1 °C /1 hour, ≤ 50 %
Cold bend: -10 ±2 °C /1 hour, no observed cracking



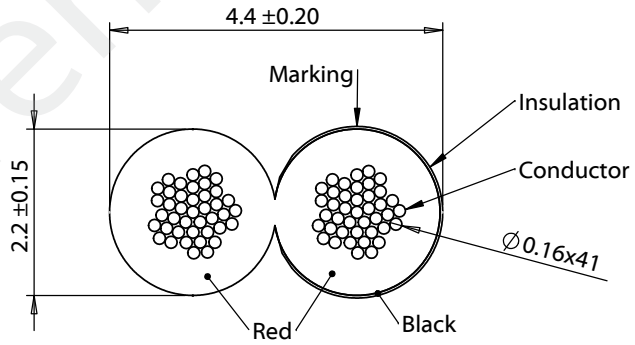

Reference

Revision:	Date:	Description:
A	7/22/2014	Initial release
A1	10/13/2014	Changed jacket construction
A2	9/8/2015	Updated jacket tolerance
A3	9/7/2018	Increased operating temperature range

Prepared:
AG
Digitally signed by AG
Date: 2018.09.07 12:23:09 -07'00'

Verified:
PS
Digitally signed by PS
Date: 2018.09.07 12:29:42 -07'00'

Dimensions are in millimeters.
Tolerances:
X: ± 0.5 mm
X.X: ± 0.3 mm
X.XX: ± 0.05 mm

Notes:
RoHS and REACH compliant

Function test: no open, no short circuit, no intermittent

Description:
Wire, 2C TS, 18 AWG, UL2468, 300V, 80°C, 4.4 mm, VW-1, PVC, red and black

TENSILITY
tel 1.541.323.3228 800 877.670.7118
fax 1.541.323.4202 web tensility.com

Size: A
Part number: 30-00415
Scale: 10:1
Sheet 1 of 1

To see a custom version of this cable assembly, call Tensility at 541-323-3228 or email engineering@tensility.com

5 4 3 2 1

Downloaded from Arrow.com.