MICRO SWITCH
FREEPORT ILLINOIS, U.S.A
A DIVISION OF HONEYWELL
FED. MFG. CODE 91929

SWITCH-BASIC

CATALOG LISTING
YE-2RB-A4

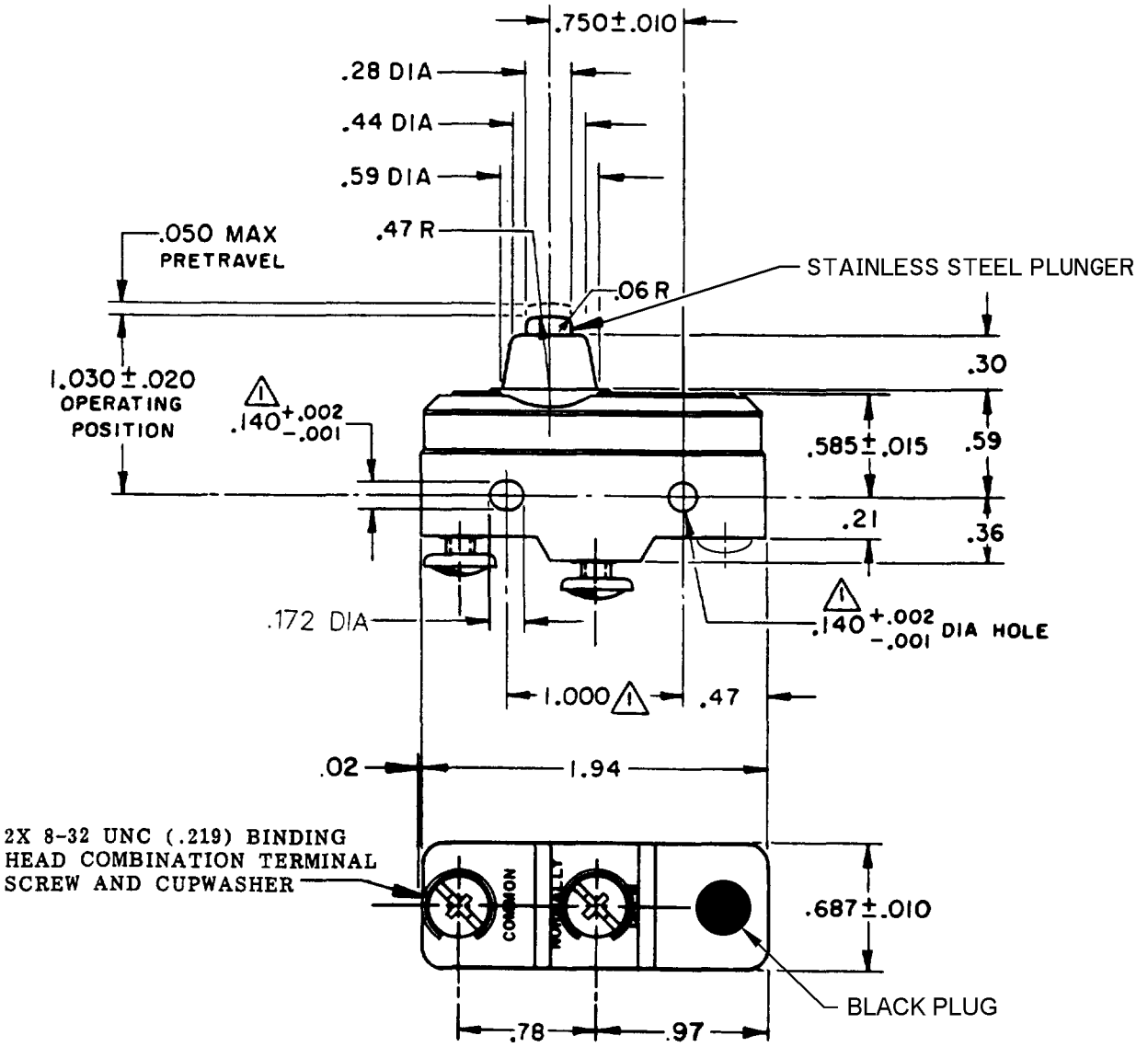

NOTE
1. MOUNTING HOLES WILL ACCEPT PINS OR SCREWS OF .139 MAX DIA ON 1.000±.002 CENTERS

THIS DRAWING COVERS A PROPRIETARY ITEM AND IS THE PROPERTY OF MICRO SWITCH, A DIVISION OF HONEYWELL. THIS DRAWING IS NOT TO BE COPIED OR USED WITHOUT THE APPROVAL OF MICRO SWITCH.

THIRD ANGLE PROJECTION

CHARACTERISTICS

OPERATING FORCE ---- 14-22 OZ

RELEASE FORCE ---- 10 OZ MIN

DIFFERENTIAL TRAVEL--.0020-.0075

OVERTRAVEL------.094 MIN

ELECTRICAL DATA

CONTACT ARRANGEMENT
S P N O

25A-125 or 250VAC
1HP-125VAC; 2HP-250VAC
PILOT DUTY 750VA-125, 250, 277VAC
60/75°C(Cu)

SCALE FULL

DO NOT SCALE PRINT

TOLERANCES
APPLY TO DESIGN UNITS. CONVERSIONS ARE ONLY FOR REFERENCE. UNLESS NOTED, TOLERANCES ARE ±

	DIM. mm	TOL. mm/in	DIM. in	TOL. mm/in
NO PLACES	X	1/.04		
ONE PLACE	X.X	0.4/.016	X.X	0.8/.03
TWO PLACES	X.XX	0.18/.008	X.XX	0.38/.015
THREE PLACES			X.XXX	0.13/.006
ANGLES				

SI METRIC ☐ US CUSTOMARY ■

DESIGN UNITS

WEIGHT .064 LB

CATALOG LISTING YE-2RB-A4 PAGE 1 OF 1
RELEASE NO. PR-4534
REPLACES
DRAWING NUMBER M
ISSUE 6

REVISIONS
A CO 58782 WJM 24 JAN 86
B CO-73257-G JAL 20 OCT 93
C CO 77588 TSM 29 MAR 94
D CO-95750-B CSL 3 APR 00
E 0000782 JAH 7 JUL 03

CHECK DAW 29 OCT 74
CHECK GLH 26 OCT 74
DRAWN
RASTER
FO-52848-A

Downloaded from Arrow.com.