Downloaded from Arrow.com.

MICRO SWITCH
a Honeywell Division
FED. MFG. CODE 91929

SWITCH – TOGGLE

CATALOG LISTING
12TW49 SERIES
CHART 1

THIS DRAWING COVERS A PROPRIETARY ITEM AND IS THE PROPERTY OF MICRO SWITCH. A DIVISION OF HONEYWELL. THIS DRAWING IS NOT TO BE COPIED OR USED WITHOUT THE APPROVAL OF MICRO SWITCH

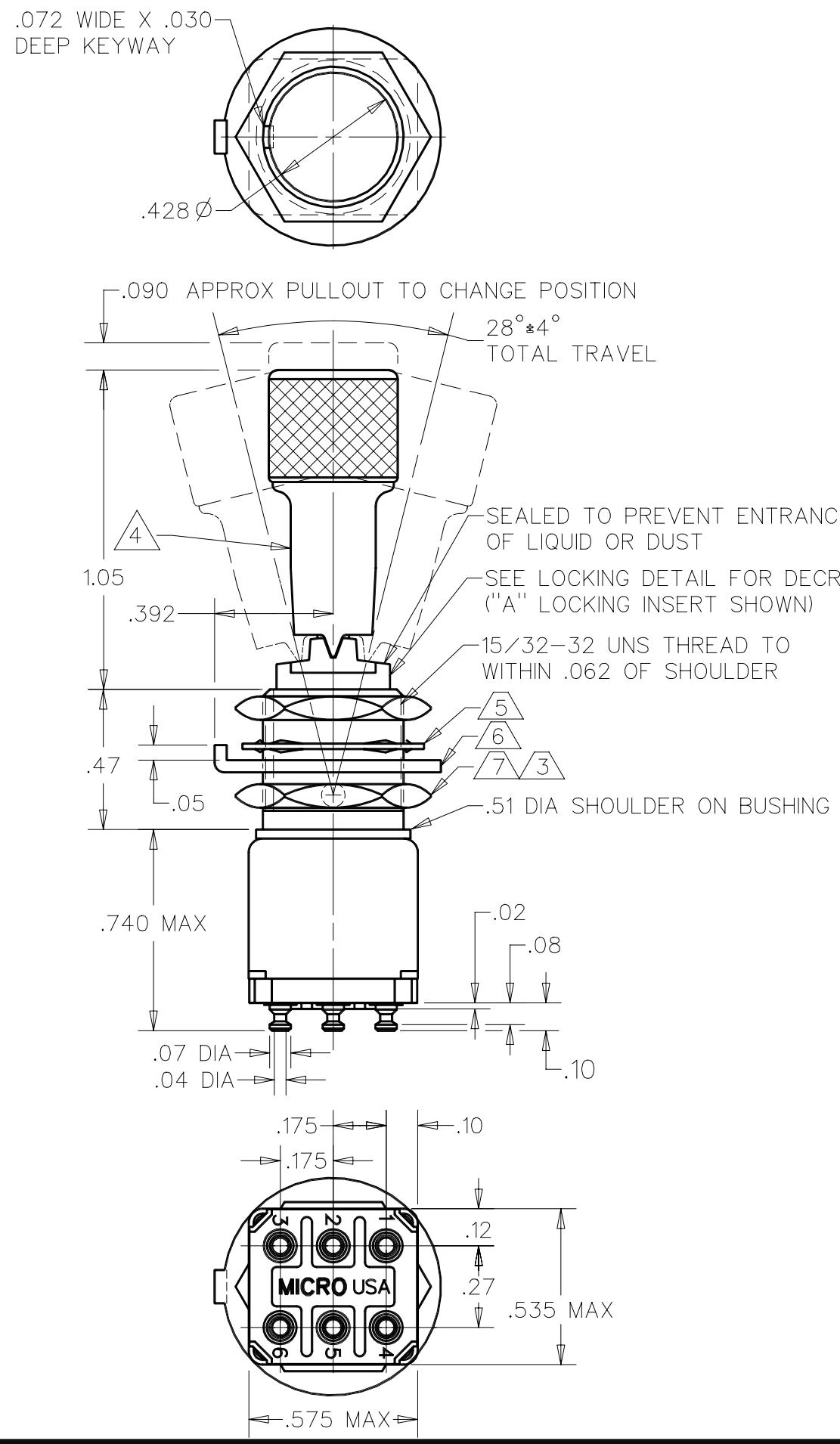

CAT. LIST. △2	RECOMMENDED LOCKING COMBINATIONS	CIRCUIT WITH TOGGLE IN: EXTREME POSITION (KEYWAY SIDE) 2–1, 5–4	CENTER 1–2, 4–5	EXTREME POSITION (OPPOSITE KEYWAY) 2–3, 5–6	ELECTRICAL DATA
12TW49–1	A,B,D,E,F,G,H,J,K,L,M,N,P	ON	OFF	ON	–L117– 5A–125 VAC
12TW49–3	D , F , G	ON	NONE	ON	
12TW49–5	E , F , K , L , M , N	MOM ON	OFF	ON	
12TW49–7	E , L , N	MOM ON	OFF	MOM ON	
12TW49–8	F	MOM ON	NONE	ON	
12TW49–21	E , K	NONE	OFF	ON	
12TW49–31	E , K	NONE	ON	ON	

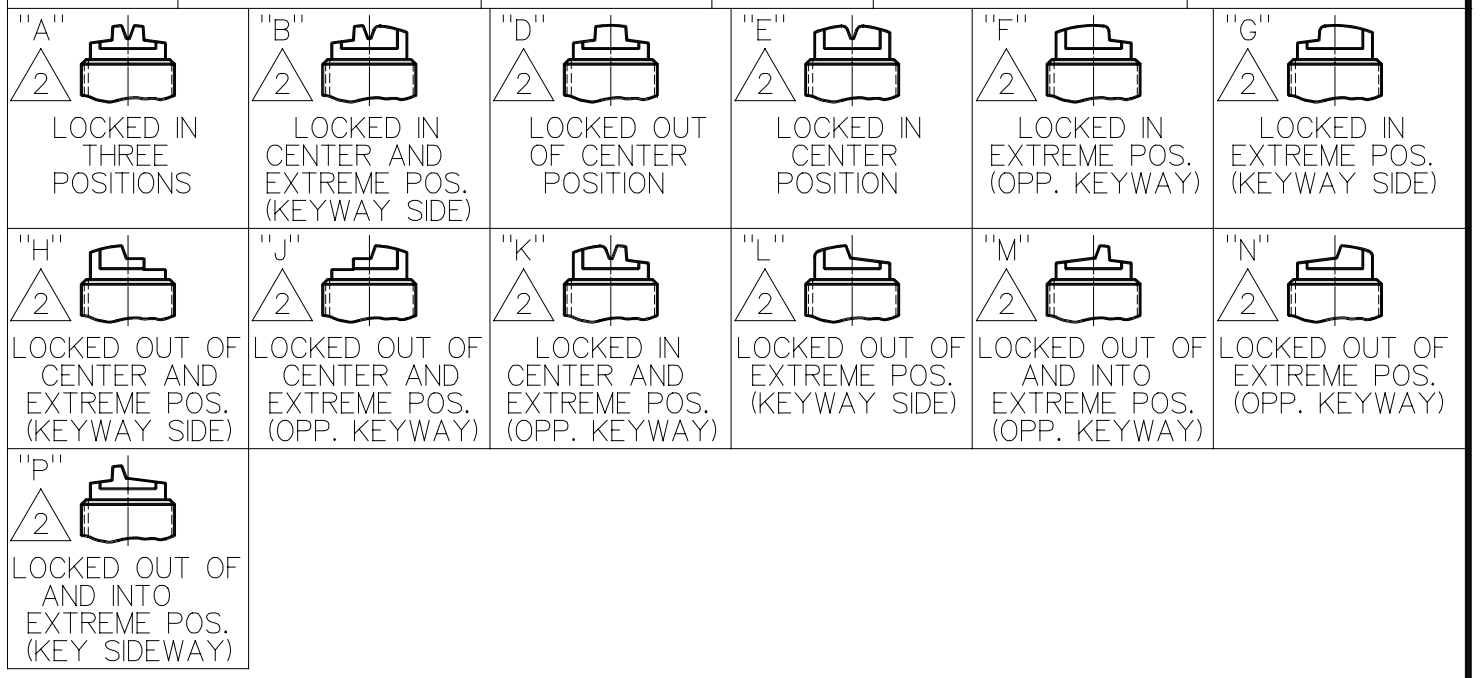

NOTES
1 – TERMINALS ARE PLATED FOR SOLDERING
△2 SUFFIX MUST BE ADDED FOR DESIRED TYPE TOGGLE LOCKING
△3 MATTE FINISH
△4 LUSTERLESS WHITE IN ACCORDANCE WITH FED. STD. NO. 595 COLOR NO. 37875
△5 CORROSION RESISTANT INTERNAL TOOTH LOCKWASHER .59 DIA X .018 REF THICK
△6 CORROSION RESISTANT STEEL KEYING WASHER .72 DIA X .040 THICK. TAB .110 WIDE
△7 HEX NUT .56 ACROSS FLATS X .078 THICK (2)

THIRD ANGLE PROJECTION

SCALE 2 : 1

DO NOT SCALE PRINT

UNLESS OTHERWISE SPECIFIED TOLERANCES ARE

ONE PLACE	(.0)	±.030
TWO PLACE	(.00)	±.015
THREE PLACE	(.000)	±.005
ANGLES		±

WEIGHT .045 LB MAX

12TW49 SERIES CHART 1
DRAWING NUMBER
ISSUE 14
RELEASE NO.
REPLACES
CHECK

REVISIONS
A CO 62906 DJS 26 APR 88

DDM/CAD
DRAWN
DJS 27APR88