IMX91CEC

i.MX 91 Application Processors Data Sheet for Commercial Products

Rev. 5 — 16 March 2026 Product data sheet

- This document provides electrical specifications for i.MX91.
- For functional characteristics and the programming model, see i.MX91 Applications Processor Reference Manual (IMX91RM).

Downloaded from Arrow.com.

1 i.MX 91 introduction

NXP's New Secure, Energy-Efficient i.MX 91 Family Expands Linux® Capabilities for Thousands of Edge Applications.

The i.MX 91 applications processor features an Arm® Cortex®-A55 running at up to 1.4 GHz and support for modern LPDDR4 memory to enable platform longevity and reliability; dual Gigabit Ethernet for gateway or multi-network segment support; dual USB ports; and the essential I/O for products in smart factory, smart home, smart office, medical device, metering, and cost-optimized system-on-module platforms.

The i.MX 91 may be used in applications such as:

- EV Charging
- Matter-enabled IoT Platforms
- Smart Home, Office, and City
- Building Automation and Monitoring
- Industrial Monitoring and HMI
- Portable or small form-factor Medical and Healthcare devices
- Audio and Entertainment IoT

Table 1. Features

Subsystem	Features
Cortex®-A55 platform	One Cortex®-A55 processor operating at up to 1.4 GHz • 32 KB L1 Instruction Cache • 32 KB L1 Data Cache • 256 KB L2 cache • Media Processing Engine (MPE) with Arm® Neon™ technology supporting the Advanced Single Instruction Multiple Data architecture • Floating Point Unit (FPU) with support of the Arm® VFPv4-D16 architecture
	Supports of 64-bit Arm® v8.2-A architecture
	Parity/ECC protection on L1 cache, L2 cache, and TLB RAMs
Image Sensor Interface (ISI)	• Standard pixel formats commonly used in many camera input protocols • Programmable resolutions up to 2K • Image processing for: — Supports one source of up to 2K horizontal resolution — Supports pixel rate up to 200 Mpixel/s • Image down scaling via decimation and bi-phase filtering • Color space conversion • Interlaced to progressive conversions
On-chip memory	Boot ROM (256 KB) for Cortex®-A55
	On-chip RAM (384 KB)

Table continues on the next page...

All information provided in this document is subject to legal disclaimers.

© 2026 NXP B.V. All rights reserved.

Downloaded from Arrow.com.

Table 1. Features*...continued*

Subsystem	Features
External memory interface	16-bit DRAM interface supports at up to 2400 MT/s: • LPDDR4 with inline ECC • Supports up to 2 Gbyte DDR memory space
	Three Ultra Secure Digital Host Controller (uSDHC) interfaces: • One eMMC 5.1 (8-bit) compliance with HS400 DDR signaling to support up to 400 MB/sec • One SDXC (4-bit, no eMMC 5.1, with extended capacity) • One SDIO (4-bit, SD/SDIO 3.01 compliance with 200 MHz SDR signaling and up to 100 MB/sec)
	FlexSPI Flash with support for XIP (for Cortex®-A55 in low-power mode) and support for either one Octal SPI or Quad SPI FLASH device. It also supports both Serial NOR and Serial NAND flash using the FlexSPI.
LCDIF Display Controller	The LCDIF can drive following displays: • Parallel display: up to 1366x768p60 or 1280x800p60
Audio	• Three interfaces: — SAI1 supports 2 lanes TX and 1 lane RX — SAI2 supports 1 lane TX and RX — SAI3 supports 1 lane TX and RX — SAI2 and SAI3 support glue-less switching between PCM and stereo DSD operation • One SPDIF supports raw capture mode that can save all the incoming bits into audio buffer • 24-bit PDM supports up to 8-microphones (4 lanes)
GPIO and input/output multiplexing	General-purpose input/output (GPIO) modules with interrupt capability
	Input/output multiplexing controller (IOMUXC) to provide centralized pad control
Power management	Temperature sensor with programmable trip points
	Flexible power domain partitioning with internal power switches to support efficient power management
Connectivity	Two USB 2.0 controller and PHY interfaces
	Two Controller Area Network (FlexCAN) modules, each optionally supporting flexible data-rate (FD)
	Two Improved Inter Integrated Circuit (I3C) modules

Table continues on the next page...

All information provided in this document is subject to legal disclaimers.

© 2026 NXP B.V. All rights reserved.

Downloaded from Arrow.com.

Table 1. Features*...continued*

Subsystem	Features
	Three Ultra Secure Digital Host Controller (uSDHC) interfaces
	Two Ethernet controllers (capable of simultaneous operation): • One Gigabit Ethernet controller with support for Energy Efficient Ethernet (EEE), Ethernet AVB, and IEEE 1588 • One Gigabit Ethernet controller with support for TSN in addition to EEE, Ethernet AVB, and IEEE 1588
	Eight Low Power SPI (LPSPI) modules
	Eight Low Power I2C modules
	Eight Low Power Universal Asynchronous Receiver/Transmitter (LPUART) modules: • Programmable baud rates up to 5 Mbps
	One Analog-to-Digital Converter (SAR ADC) module • 12-bit 4-channel with 1 MS/s
Security	Trusted Resource Domain Controller (TRDC) • Supports 16 domains
	Arm® TrustZone® (TZ) architecture, including both TrustZone-A
	On-chip RAM (OCRAM) secure region protection using OCRAM controller
	EdgeLock® secure enclave
	Battery Backed Security Module (BBSM) • Secure Non-Volatile Storage (SNVS) • Secure real-time clock (RTC)
System debug	Arm® CoreSight™ debug and trace technology
	Embedded Trace FIFO (ETF) with 4 KB internal storage to provide trace buffering
	Unified trace capability for single core Cortex®-A55
	Cross Triggering Interface (CTI)
	Support for 4-pin (JTAG) debug interface and SWD

1.1 Ordering information

Table 2 provides examples of orderable part numbers covered by this Data Sheet.

All information provided in this document is subject to legal disclaimers.

© 2026 NXP B.V. All rights reserved.

Downloaded from Arrow.com.

Table 2. Ordering information

Part number	Sub-Family	A55 Frequency	DDR Rate	Qualification type	Temperature Tj[1]	GDET	Audio (SAI)	Audio (I2S)	USB	Ethernet	Package
MIMX9131DVVXJAB	3	1.4 GHz	2.4 G/Ts	Commercial	0 to 95 °C	No	3	4	2	2	11 x 11 mm, 0.5 mm pitch, FCBGA
MIMX9121DVVXCAB[2]	2	800 MHz	1.6 G/Ts	Commercial	0 to 95 °C	No	3	4	2	2	11 x 11 mm, 0.5 mm pitch, FCBGA
MIMX9111DVXXJAB	1	1.4 GHz	2.4 G/Ts	Commercial	0 to 95 °C	No	2	3	1	1	9 x 9 mm, 0.5 mm pitch, FCBGA
MIMX9101DVXXCAB[2]	0	800 MHz	1.6 G/Ts	Commercial	0 to 95 °C	No	2	3	1	1	9 x 9 mm, 0.5 mm pitch, FCBGA

[1] Tj minimum temperature supported at startup and standby tests where Tj = Ta
[2] Only support Low Drive mode, up to 800 MHz

Figure 1 describes the part number nomenclature so that characteristics of a specific part number can be identified (for example, cores, frequency, temperature grade, fuse options, and silicon revision). The primary characteristic which describes which data sheet applies to a specific part is the temperature grade (junction) field.

- The i.MX 91 Processors for Commercial Products Data Sheet (IMX91CEC) covers parts listed with a "D (Commercial temp)"
- The i.MX 91 Processors for Industrial Products Data Sheet (IMX91IEC) covers parts listed with a "C (Industrial temp)"

Ensure to have the proper data sheet for specific part by verifying the temperature grade (junction) field and matching it to the proper data sheet. If there are any questions, visit the web page nxp.com/IMX or contact an NXP representative for details.

All information provided in this document is subject to legal disclaimers.

© 2026 NXP B.V. All rights reserved.

Downloaded from Arrow.com.

Part Type	i.MX Family	Segment	A-Core Qty.	Temp. Qual.	Package	Reserved	A-Core Freq	Special	Silicon Revision
P	IMX91	3/1	1	D/C	VV/VX	X	J/C	A	A

Part Type	
Sample	P
Mass Production	M
Special	S

Family	
i.MX 91	IMX91

Cortex-A Cores	
1 Core	1

Segment	Value	A-Cores	USB	ETH	I2S	A55 Freq	Memory Speed
11 x 11 Full Feature	**913**	1	2	2	4	1.4 GHz	2.4 G/Ts
11 x 11 Reduced Performance	**912**	1	2	2	4	800 MHz	1.6 G/Ts
9 x 9 Full Feature	**911**	1	1	1	3	1.4 GHz	2.4 G/Ts
9 x 9 Reduced Performance	**910**	1	1	1	3	800 MHz	1.6 G/Ts

Package Type	
11 x 11 mm, 0.5 mm pitch, FCBGA	VV
9 x 9 mm, 0.5 mm pitch, FCBGA	VX

Temperature Qualification	
Industrial: -40°C T_a to 105°C T_j	C
Commercial: 0°C T_a to 95°C T_j	D

Reserved Digit	
Reserved	X

Cortex-A55 CPU Frequency	
1.4 GHz	J
800 MHz	C

Special Fuse	
No special Fuse	A
Full featured with GDET enabled	B
Reserved	C
Reserved	D
Reserved	M
Special	S

Silicon Revision	
Rev A1	B

Figure 1. Part number nomenclature—i.MX 91

2 System block diagram

Figure 2 shows the functional modules in the i.MX 91 processor system

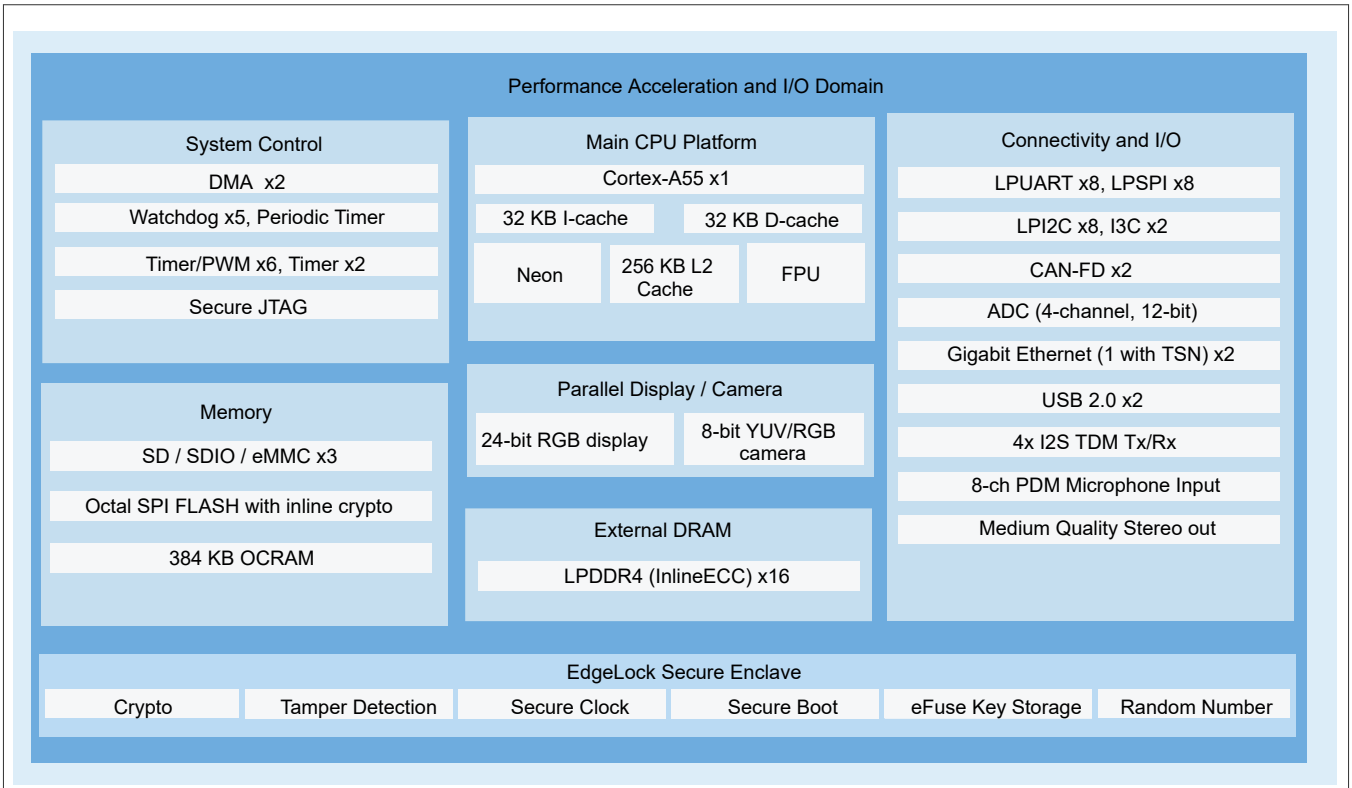

Figure 2. i.MX 91 system block diagram

All information provided in this document is subject to legal disclaimers.

© 2026 NXP B.V. All rights reserved.

Downloaded from Arrow.com.

Note: *Some modules shown in this block diagram are not offered on all derivatives. This block diagram may also show less modules than available in some derivatives. See* Table 2 *for details.*

3 Special signal considerations

Table 3 lists special signal considerations for the i.MX 91 processors. The signal names are listed in alphabetical order.

The package contact assignments can be found in Package information and contact assignments. Signal descriptions are provided in the *i.MX 91 Reference Manual* (IMX91RM).

Table 3. Special signal considerations

Signal Name	Remarks
CLKIN1/CLKIN2	CLKIN1 and CLKIN2 are input pins without internal pull-up and pull-down. An external 10K pull-down resistor is recommended if they are not used.
NC	These signals are No Connect (NC) and should be unconnected in the application.
ONOFF	A brief connection to GND in the OFF mode causes the internal power management state machine to change the state to ON. In the ON mode, a brief connection to GND generates an interrupt (intended to be a software-controllable power-down). A connection to GND for a period of time longer than the value configured in the BBNSM_CTRL[BTN_TIMEOUT] causes a forced OFF (PMIC_ON_REQ output “L”), as long as there is no pending RTC alarm event or tamper event.
POR_B	POR_B has no internal pull-up/down resistor, and requires external pull-up resistor to NVCC_BBSM_1P8. It is recommended that POR_B is properly handled during power up/down. Please refer to the EVK design for details.
RTC_XTALI/RTC_XTALO	To hit the exact oscillation frequency, the board capacitors must be reduced to account for the board and chip parasitics. The integrated oscillation amplifier is self-biasing, but relatively weak. Care must be taken to limit the parasitic leakage from RTC_XTALI and RTC_XTALO to either the power or the ground (> 100 MΩ). This de-biases the amplifier and reduces the start-up margin. If you want to feed an external low-frequency clock into RTC_XTALI, the RTC_XTALO pin must remain unconnected or driven by a complementary signal. The logic level of this forcing clock must not exceed the NVCC_BBSM_1P8 level and the frequency shall be < 50 kHz under the typical conditions.
XTALI_24M/XTALO_24M	The system requires 24 MHz on XTALI/XTALO. The crystal cannot be eliminated by an external 24 MHz oscillator. If this clock is used as a reference for USB, then there are strict frequency tolerance and jitter requirements. See On-chip oscillators and relevant interface specifications chapters for details.

3.1 Unused input and output guidance

If a function of the i.MX 91 is not used, the I/Os and power rails of that function can be terminated to reduce overall board power. Table 4 is recommended connectivities for digital I/Os. Table 5 is recommended connectivities for USB.

All information provided in this document is subject to legal disclaimers.

© 2026 NXP B.V. All rights reserved.

Downloaded from Arrow.com.

Table 4. Unused function strapping recommendations

Function	Ball name	Recommendations if unused
ADC	ADC_IN0, ADC_IN1, ADC_IN2, ADC_IN3	Tie to ground
TAMPER	TAMPER0, TAMPER1	Tie to ground
Digital I/O supplies	NVCC_GPIO, NVCC_WAKEUP, NVCC_AON, NVCC_SD2	Tie to ground through 10 KΩ resistors if entire bank is not used

Table 5. USB strapping recommendations

Function	Ball name	Recommendations
USB1 used	VDD_USB_3P3, VDD_USB_1P8, VDD_USB_0P8	Supply
	USB2_VBUS, USB2_D_P, USB2_D_N, USB2_ID, USB2_TXRTUNE	Not connected
USB2 used	VDD_USB_3P3, VDD_USB_1P8, VDD_USB_0P8	Supply
	USB1_VBUS, USB1_D_P, USB1_D_N, USB1_ID, USB1_TXRTUNE	Not connected
Neither USB1 nor USB2 used	VDD_USB_3P3, VDD_USB_1P8, VDD_USB_0P8	Tie to ground
	USB1_VBUS, USB1_D_P, USB1_D_N, USB1_ID, USB1_TXRTUNE	Not connected
	USB2_VBUS, USB2_D_P, USB2_D_N, USB2_ID, USB2_TXRTUNE	Not connected

4 Electrical characteristics

This section provides the device and module-level electrical characteristics for the i.MX 91 family of processors.

4.1 Chip-level conditions

This section provides the device-level electrical characteristics for the IC. See Chip-level conditions for a quick reference to the individual tables and sections.

Table 6. i.MX 91 chip-level conditions

For these characteristics, …	Topic appears …
Absolute maximum ratings	See Absolute maximum ratings
Thermal resistance	See Thermal resistance
Operating ranges	See Operating ranges
External clock sources	See External clock sources
Maximum supply currents	See Maximum supply currents

Table continues on the next page...

All information provided in this document is subject to legal disclaimers.

© 2026 NXP B.V. All rights reserved.

Downloaded from Arrow.com.

Table 6. i.MX 91 chip-level conditions*...continued*

For these characteristics, …	Topic appears …
Power modes	See Power modes
Power supplies requirements and restrictions	See Power supplies requirements and restrictions

4.1.1 Absolute maximum ratings

CAUTION

Stresses beyond those listed in the following table may reduce the operating lifetime or cause immediate permanent damage to the device. The table below does not imply functional operation beyond those indicated in the operating ranges and parameters table.

Table 7. Absolute maximum ratings

Parameter description	Symbol	Min	Max	Unit	Notes
Core supplies input voltages	VDD_SOC	-0.3	1.15	V	—
GPIO supply voltage	NVCC_GPIO, NVCC_WAKEUP, NVCC_AON	-0.3	3.8	V	—
IO supply for SD2	NVCC_SD2	-0.3	3.8	V	—
DDR PHY supply voltage	VDD2_DDR	-0.3	1.575	V	—
IO supply and IO Pre-driver supply for BBSM bank	NVCC_BBSM_1P8	-0.3	2.15	V	—
BBSM supply voltage	NVCC_BBSM_0P8	-0.3	1.15	V	—
USB VBUS input detected	USB1_VBUS,USB2_VUBS	-0.3	3.95	V	—
Power for USB OTG PHY	VDD_USB_0P8	-0.3	1.15	V	—
	VDD_USB_1P8	-0.3	2.15	V	—
	VDD_USB_3P3	-0.3	3.95	V	—
Analog core supply voltage	VDD_ANAx_0P8	-0.3	1.15	V	[1]
	VDD_ANAx_1P8	-0.3	2.15	V	[2]
Input/output voltage range[3]	V_{in}/V_{out}	-0.3	NVCC_XXX + 0.3	V	—
Storage temperature range	$T_{STORAGE}$	-55	150	°C	—

[1] VDD_ANAx_0P8 refers to VDD_ANA_0P8 on 11 x 11 mm package, whereas VDD_ANA0_0P8 and VDD_ANA1_0P8 on 9 x 9 mm package.
[2] VDD_ANAx_1P8 refers to VDD_ANA0_1P8, VDD_ANA1_1P8, and VDD_ANAVDET_1P8.
[3] Input and output voltages on the GPIO pins must remain within a minimum of –300 mV and a maximum of NVCC_XXX + 300 mV, where NVCC_XXX is the operational GPIO supply voltage at the SoC. These limits include any DC offsets from the driving device as well as any AC transients—such as overshoot or undershoot—occurring during signal switching.

All information provided in this document is subject to legal disclaimers.

© 2026 NXP B.V. All rights reserved.

Downloaded from Arrow.com.

Table 8. Electrostatic discharge and latch-up ratings

Parameter description		Rating	Reference	Comment
Electrostatic Discharge (ESD)	Human Body Model (HBM)	±1000 V	JS-001-2017	—
	Charged Device Model (CDM)	±250 V	JS-002-2018	—
Latch-up (LU)	Immunity level: • Class II @ 95 °C ambient temperature	A A	JESD78E	—

4.1.2 Thermal resistance

4.1.2.1 11 x 11 mm FCBGA package thermal characteristics

Table 9 lists the 11 x 11 mm FCBGA package thermal resistance data.

Table 9. 11 x 11 mm FCBGA thermal resistance data [1]

Rating	Board Type[2]	Symbol	Values	Unit
Junction to Ambient Thermal Resistance[3]	JESD51-9, 2s2p	$R_{\theta JA}$	22.2	°C/W
Junction-to-Top of Package Thermal Characterization parameter[3]	JESD51-9, 2s2p	Ψ_{JT}	0.4	°C/W
Junction to Case Thermal Resistance [4]	N/A	$R_{\theta JC}$	8.5	°C/W

[1] Power dissipation: Total power 1.24 W
[2] Thermal test board meets JEDEC specification for this package (JESD51-9).
[3] Determined in accordance to JEDEC JESD51-2A natural convection environment. Thermal resistance data in this report is solely for a thermal performance comparison of one package to another in a standardized specified environment. It is not meant to predict the performance of a package in an application-specific environment.
[4] Junction-to-Case thermal resistance determined using an isothermal cold plate.

4.1.2.2 9 x 9 mm FCBGA package thermal characteristics

Table 10 lists the 9 x 9 mm FCBGA package thermal resistance data.

Table 10. 9 x 9 mm FCBGA thermal resistance data[1]

Rating	Board Type[2]	Symbol	Values	Unit
Junction to Ambient Thermal Resistance[3]	JESD51-9, 2s2p	$R_{\theta JA}$	28.7	°C/W
Junction-to-Top of Package Thermal Characterization parameter[3]	JESD51-9, 2s2p	Ψ_{JT}	0.7	°C/W
Junction to Case Thermal Resistance[4]	N/A	$R_{\theta JC}$	8.5	°C/W

[1] Power dissipation: Total power 1.24 W
[2] Thermal test board meets JEDEC specification for this package (JESD51-9).
[3] Determined in accordance to JEDEC JESD51-2A natural convection environment. Thermal resistance data in this report is solely for a thermal performance comparison of one package to another in a standardized specified environment. It is not meant to predict the performance of a package in an application-specific environment.
[4] Junction-to-Case thermal resistance determined using an isothermal cold plate.

All information provided in this document is subject to legal disclaimers.

© 2026 NXP B.V. All rights reserved.

Downloaded from Arrow.com.

4.1.3 Power architecture

The i.MX power architecture is designed with the expectation that a dedicated PMIC supplies all required power rails, ensuring compliance with stringent power-up and power-down sequencing requirements. While discrete component-based implementations are technically viable, they typically lead to increased BOM cost, greater design complexity, and a larger PCB footprint. In contrast, the proposed PMIC solution is BOM-optimized, minimizes board area by integrating multiple power functions into a single package, and simplifies system design by providing a validated, production-tested power management solution that inherently meets the voltage and sequencing specifications of the i.MX platform.

NVCC_BBSM_1P8 must be powered first and stay until the last.

The digital logic inside chip will be supplied with VDD_SOC.

The DRAM controller and PHY have multiple external power supplies:

Table 11. Power supplies of the DRAM controller and PHY

Power supplies	Modules
VDD_SOC	SoC synthesized DRAM controller digital logic
VDD_ANA_0P8	DRAM PLL and PHY digital logic
VDD_ANAx_1P8	DRAM PLL and PHY analog circuitry
VDD2_DDR	1.1 V DRAM PHY I/O supply

For all the integrated analog modules, their 1.8 V analog power will be supplied externally through power pads. These supplies are separated with other power pads (NVCC_XXX) on the package to keep them clean. External filters on these supplies may be needed on the board to isolate the analog 1.8 V supplies from the noisy I/O NVCC_XXX supplies.

For the integrated USB PHY, its 3.3 V (where supported), 1.8 V, and their digital power will be supplied externally through power pads. The powers to those PHYs are separated with other power pads on the package to keep them clean. External filters may be needed to isolate the PHY supplies to keep them clean.

For BBSM/RTC, the 1.8 V I/O pre-driver supply and 1.8 V I/O pad supply will also be supplied externally. The BBSM_LP core digital domain logic is supplied by an internal LDO.

Figure 3 is the power architecture diagram for the whole chip. Note that it only shows power supplies, and does not show capacitors that may be required for internal LDO regulators.

All information provided in this document is subject to legal disclaimers.

© 2026 NXP B.V. All rights reserved.

Downloaded from Arrow.com.

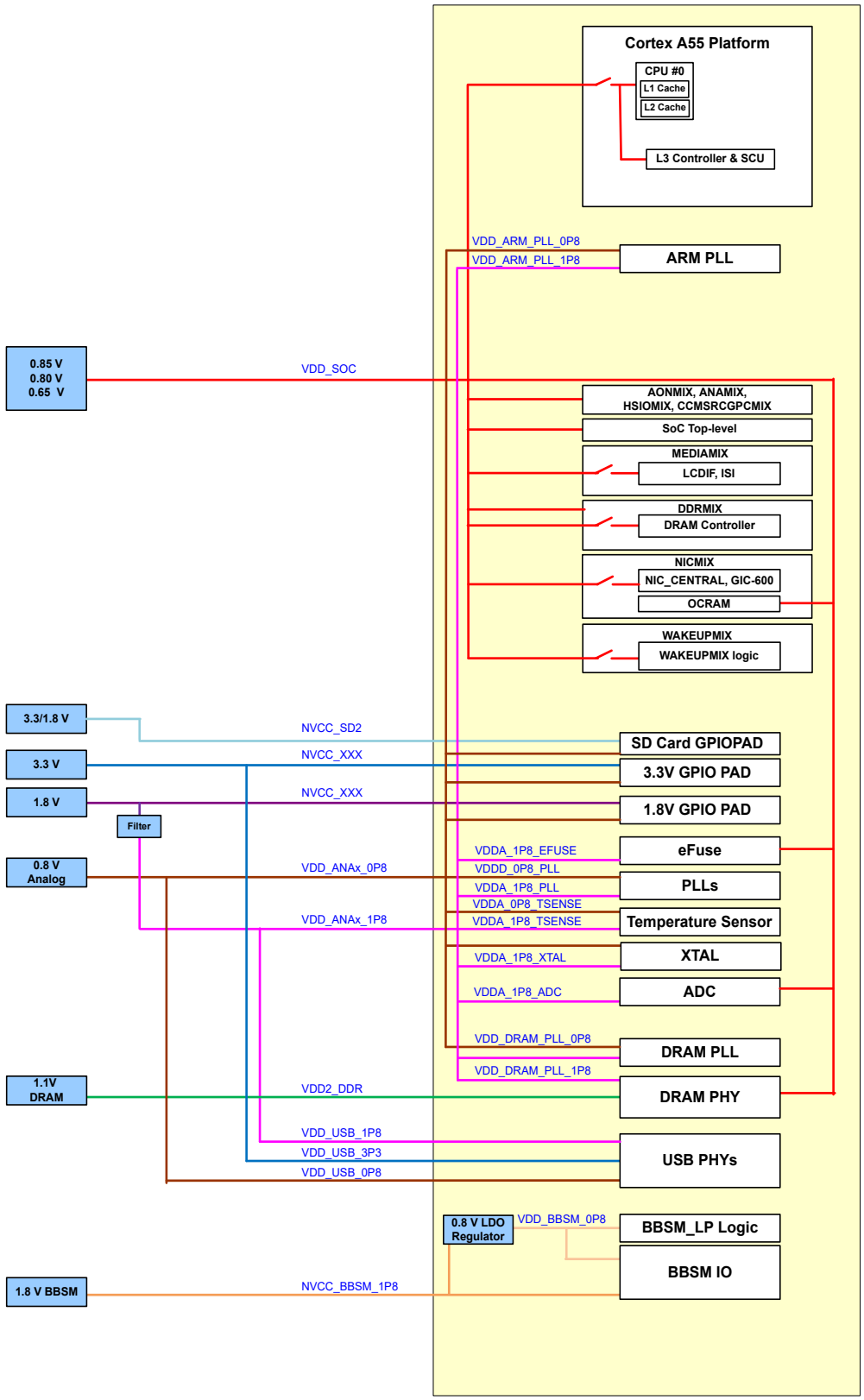

Figure 3. Power architecture of i.MX 91 family processors

All information provided in this document is subject to legal disclaimers.

© 2026 NXP B.V. All rights reserved.

Downloaded from Arrow.com.

4.1.4 Operating ranges

Table 12 provides the operating ranges of the i.MX 91 processors. For details on the chip's power structure, see the "Power Management Unit (PMU)" chapter of the *i.MX 91 Reference Manual* (IMX91RM).

Table 12. Operating ranges

Parameter Description	Symbol	Min	Typ	Max[1]	Unit	Comment
Power supply for all digital logics	VDD_SOC	0.80	0.85	0.90	V	Power supply for SoC, nominal mode, 1.4 GHz
Power supply for all digital logics	VDD_SOC	0.76	0.80	0.84	V	Power supply for SoC, low drive mode, 900 MHz[2]
Power supply for all digital logics	VDD_SOC	0.61	0.65	0.69	V	Power supply for SoC, suspend mode
Power supply for PLLs, I/Os, USB PHY, Temp Sense	VDD_ANAx_0P8[3] VDD_USB_0P8	0.76	0.80/0.85	0.90	V	Digital supply for PLLs, Temperature sensor, LVCMOS I/O and USB PHYs
1.8 V supply for PLLs, eFuse, Temperature sensor, LVCMOS voltage detect reference, ADC, 24 MHz XTAL, and USB PHY	VDD_ANAx_1P8 VDD_USB_1P8	1.71	1.80	1.89	V	[4]
3.3 V supply for USB PHY	VDD_USB_3P3	3.069	3.30	3.45	V	—
Voltage supply for DRAM PHY	VDD2_DDR	1.06	1.10	1.14	V	LPDDR4
I/O supply and I/O pre-driver supply for GPIO in BBSM bank	NVCC_BBSM_1P8	1.65	1.80	1.95	V	—
Power supply for GPIO	NVCC_AON NVCC_SD2 NVCC_GPIO NVCC_WAKEUP	1.65	1.80	1.95	V	1.8 V mode
		3.00	3.30	3.45	V	3.3 V mode
Temperature Ranges						
Junction temperature —Commercial	Tj[5]	0	—	95	°C	See the application note, i.MX 91 Product Lifetime Usage Estimates for information on product lifetime (power-on hours) for this processor.
Ambient temperature —Commercial	Ta	0	—	—		

[1] Applying the maximum voltage results in maximum power consumption and heat generation. NXP recommends a voltage set point = (V_{min} + the supply tolerance). This result in an optimized power/speed ratio.
[2] Reduced performance parts are only support Low Drive mode, up to 800 MHz.
[3] VDD_ANAx_0P8 refers to VDD_ANA_0P8 on 11 x 11 mm package, whereas VDD_ANA0_0P8 and VDD_ANA1_0P8 on 9 x 9 mm package.

All information provided in this document is subject to legal disclaimers.

© 2026 NXP B.V. All rights reserved.

Downloaded from Arrow.com.

[4] VDD_ANAx_1P8 refers to VDD_ANA0_1P8, VDD_ANA1_1P8, and VDD_ANAVDET_1P8.
[5] Tj minimum temperature supported at startup where Tj = Ta

4.1.5 Maximum frequency of modules

Table 13 provides the maximum frequency of modules in the i.MX 91 of processors.

Table 13. Maximum frequency of modules

Main modules	Frequency (Low Drive mode)	Frequency (Nominal mode)
EdgeLock Secure Encalve	133 MHz	200 MHz
Cortex A55 core	900 MHz[1]	1.4 GHz
DRAM	800 MHz	1.2 GHz

[1] Reduced performance parts are only support Low Drive mode, up to 800 MHz.

4.1.6 Clock sources

This section introduces on-chip oscillator and external clcok sources.

4.1.6.1 External clock sources

The i.MX 91 processor is designed to function with quartz crystals to generate the frequencies necessary for operation. 24 MHz for the main clock source and 32.768 kHz for the real time clock.

The XTAl input is used to synthesize all of the clocks in the system with the RTC_XTAL input contributing to time keeping and low frequency operations.

Table 14 shows the interface frequency requirements.

Table 14. External input clock frequency

Parameter Description	Symbol	Min	Typ	Max	Unit
RTC_XTALI Oscillator[1]	f_{ckil}	—	32.768[2]	—	kHz

[1] External oscillator or a crystal with internal oscillator amplifier.
[2] Recommended nominal frequency is 32.768 kHz.

Table 15 shows the external input clock for RTC_XTAL oscillator.

Table 15. RTC_OSC

Description	Symbol	Min	Typ	Max	Unit
Frequency	f	—	32.768	—	kHz
RTC_XTALI	V_{IH}	0.9 x NVCC_BBSM_1P8	—	NVCC_BBSM_1P8	V
	V_{IL}	0	—	0.1 x NVCC_BBSM_1P8	V
	Duty cycle	45	—	55	%

4.1.6.2 On-chip oscillators

An external 24 MHz crystal is used in conjunction with the integrated amplifier to form a crystal oscillator that is used as the reference clock for all frequency synthesis on the processor.

All information provided in this document is subject to legal disclaimers.

© 2026 NXP B.V. All rights reserved.

Downloaded from Arrow.com.

Table 16. 24M quartz specifications[1]

Symbol	Parameter Description	Min	Typ	Max	Unit
fXTAL	Frequency	—	24	—	MHz
CLOAD	Cload	—	12	—	pF
DL	Drive level	—	—	100	μW
ESR	ESR	—	—	120	Ω

[1] An external 24 MHz crystal is used in conjunction with the integrated amplifier to form a crystal oscillator that is used as the reference clock for all frequency synthesis on the processor.

Table 17 shows 32K oscillator specifications.

Table 17. 32.768 kHZ quartz specifications

Symbol	Parameter Description	Min	Typ	Max	Unit
fXTAL	Frequency (crystal mode) [1]	—	32.768	—	kHz
CLOAD	Cload	—	12.5	—	pF
ESR	ESR	—	—	90	KΩ

[1] Actual working drive level is dependent on real design. Please contact crystal vendor for selecting drive level of crystal.

4.1.7 Maximum supply currents

Power consumption is highly dependent on the application. Estimating the maximum supply currents required for power supply design is difficult because the use cases that requires maximum supply current is not a realistic use cases.

To help illustrate the effect of the application on power consumption, data was collected while running commercial standard benchmarks that are designed to be compute and graphic intensive. The results provided are intended to be used as guidelines for power supply design.

Table 18. Maximum supply currents

Power rail	Max current	Unit
VDD_SOC	1500	mA
VDD_ANAx_1P8 [1]	150	mA
VDD_ANAx_0P8[2]	50	mA
VDD_USB_0P8	22.2	mA
NVCC_BBSM_1P8	2	mA
VDD2_DDR	400	mA
NVCC_<XXX>	I_{max} = N x C x V x (0.5 x F) Where: N—Number of IO pins supplied by the power line	

Table continues on the next page...

All information provided in this document is subject to legal disclaimers.

© 2026 NXP B.V. All rights reserved.

Downloaded from Arrow.com.

Table 18. Maximum supply currents *...continued*

Power rail	Max current	Unit
	C—Equivalent external capacitive load V—IO voltage (0.5 x F)—Data change rate. Up to 0.5 of the clock rate (F). In this equation, I_{max} is in Amps, C in Farads, V in Volts, and F in Hertz.	
VDD_USB_3P3 (for USB 2.0 PHY)	25.2	mA
VDD_USB_1P8 (for USB 2.0 PHY)	36.2	mA

[1] VDD_ANAx_1P8 refers to VDD_ANA0_1P8, VDD_ANA1_1P8, and VDD_ANAVDET_1P8.
[2] VDD_ANAx_0P8 refers to VDD_ANA_0P8 on 11 x 11 mm package, whereas VDD_ANA0_0P8 and VDD_ANA1_0P8 on 9 x 9 mm package.

4.2 Power modes

This section introduces the power modes used in the i.MX 91 processors.

4.2.1 Power mode definition

The i.MX 91 supports the following power modes:

- RUN Mode: All external power rails are on, the Cortex-A55 is active and running; other internal modules can be on/off based on application.
- IDLE Mode: This mode is defined as a mode, which the Cortex-A55 can automatically enter when there is no thread running and all high-speed devices are not active. The Cortex-A55 can be put into power gated state, DRAM and the bus clock are reduced. Most of the internal logic is clock gated, but still remains powered. Compared with RUN mode, all the power rails from the power management remains the same and most of the modules still remain in their state, so the interrupt response in this mode is very small.
- SUSPEND Mode: This mode is defined as the most power saving mode where all the clocks are off, all the unnecessary power supplies are off and all power gateable portions of the SoC are power gated. The Cortex-A55 CPU are fully power gated, all internal digital logic and analog circuit that can be powered down will be off, and all PHYs are power gated. DRAM is set at self-refresh/retention mode. VDD_SOC (and related digital supply) voltage is reduced to the "Suspend mode" voltage. The exit time from this mode will be much longer than IDLE, but the power consumption will also be much lower.
- BBSM Mode: This mode is also called RTC mode. Only the power for the BBSM domain remains on to keep RTC and BBSM logic alive.
- OFF Mode: All power rails are off.

Note: *Beyond the modes defined here, additional options can be configured in software, such as to adjust clock frequencies or gate clocks through the CCM programming model, or to adjust on-die power-gating through the SRC or GPC programming model, or to adjust the voltage supplied to the VDD_SOC and VDD_ARM supplies as per* Table 12 *in the Data Sheet.*

Table 19 summarizes the external power supply states in all the power modes.

Table 19. Power supply states

Power rail	OFF	BBSM	SUSPEND	IDLE	RUN
NVCC_BBSM_1P8	OFF	ON	ON	ON	ON

Table continues on the next page...

All information provided in this document is subject to legal disclaimers.

© 2026 NXP B.V. All rights reserved.

Downloaded from Arrow.com.

Table 19. Power supply states *...continued*

Power rail	OFF	BBSM	SUSPEND	IDLE	RUN
VDD_SOC	OFF	OFF	ON	ON	ON
VDD2_DDR	OFF	OFF	ON	ON	ON
NVCC_<XXX>	OFF	OFF	ON	ON	ON
VDD_ANAx_0P8 VDD_USB_0P8	OFF	OFF	ON	ON	ON
VDD_ANAx_1P8 VDD_USB_1P8 VDD_USB_3P3	OFF	OFF	ON	ON	ON

4.2.2 Low power modes

The state of each module in the IDLE, SUSPEND, and BBSM mode are defined in the Table 20.

Table 20. Low power mode definition

	IDLE	SUSPEND	BBSM
CCM LPM mode	WAIT	STOP	N/A
Arm Cortex-A55 CPU0	OFF	OFF	OFF
MEDIA	OFF	OFF	OFF
DRAM controller and PHY	ON	OFF	OFF
WAKEUPMIX	ON	ON	OFF
NICMIX	ON	OFF	OFF
ARM_PLL	OFF	OFF	OFF
DRAM_PLL	OFF	OFF	OFF
SYSTEM_PLL1	ON	OFF	OFF
XTAL	ON	OFF	OFF
RTC	ON	ON	ON
External DRAM device	Self-Refresh[1]	Self-Refresh[2]	OFF
USB PHY	In Low Power State	OFF	OFF
DRAM clock	200 MHz	OFF	OFF

Table continues on the next page...

All information provided in this document is subject to legal disclaimers.

© 2026 NXP B.V. All rights reserved.

Downloaded from Arrow.com.

Table 20. Low power mode definition *...continued*

	IDLE	SUSPEND	BBSM
AXI clock	133 MHz	OFF	OFF
Module clocks	ON as needed	OFF	OFF
EdgeLock Secure Enclave	ON	ON	OFF
GPIO Wakeup	Yes	Yes	OFF
RTC Wakeup	Yes	Yes	Yes
USB remote wakeup	Yes	No[3][4]	No
Other wakeup source[5]	Yes	No	No

[1] Automatic enter self-refresh when there is no DRAM access.
[2] Put into self-refresh mode by software before entering low power mode.
[3] Turn off externally by PMIC when PMIC_STBY_REQ signal is asserted.
[4] USB remote wakeup can be "Yes" if required.
[5] Remote wakeup can be supported if the USB PHY power is on in this mode.

4.2.3 Chip power in different Low Power modes

Table 21 shows power consumption in different LP modes.

Table 21. Chip power in different LP modes

Mode	Supply	Voltage (V)	Typical power (mW)[1]	Maximum power (mW)[1]
SUSPEND	NVCC_GPIO[2]	3.3	1.88	2.08
	NVCC_WAKEUP[2]	1.8	1.14	1.51
	VDD2_DDR	1.1	0.23	0.24
	VDDQ_DDR	0.6	0	0
	VDD_USB_3V3	3.3	0.21	0.23
	VDD_USB_0V8	0.8	0.04	0.12
	VDD_ANA0_1P8	1.8	0.67	0.71
	VDD_ANA1_1P8	1.8	0.41	0.43
	VDD_ANAVEDT_1P8	1.8	0.08	0.09
	VDD_ANA_0P8	0.8	0.26	0.44
	NVCC_SD2[2]	3.3	0.98	1.04
	VDD_SOC	0.65	5.5	13.6
	Total[3]	—	11.4	20.49

[1] All the power numbers defined in the table are at 25°C Tj. Based on characterization, not tested in production. Use case dependent.

All information provided in this document is subject to legal disclaimers.

© 2026 NXP B.V. All rights reserved.

Downloaded from Arrow.com.

[2] To achieve this low power consumption values for I/O power rails in SUSPEND mode, it is recommended to configure the IOMUX of those pins to GPIO input and change the PAD control settings to pull-up or pull-down depends on the board design before entering SUSPEND mode.

[3] Sum of the listed supply rails.

4.3 Power supplies requirements and restrictions

The system design must comply with power-up sequence, power-down sequence, and steady state guide-lines as described in this section to guarantee the reliable operation of the device. Any deviation from these sequences may result in the following situations:

- Excessive current during power-up phase
- Prevention of the device from booting
- Irreversible damage to the processor (worst-case scenario)

Figure 4 illustrates the power-up and power-down sequence of i.MX 91 processors.

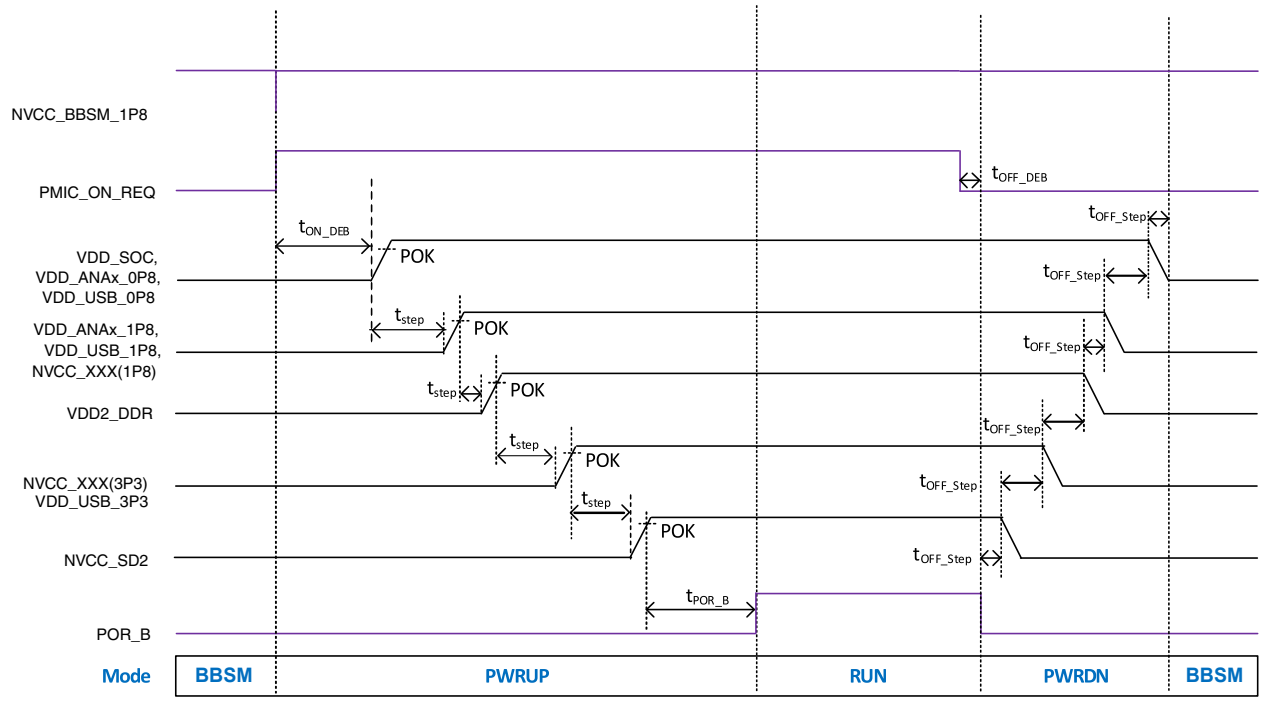

Figure 4. The power sequence of i.MX 91 processors

Note: *POR_B must be asserted whenever VDD_SOC is powered down, but NVCC_BBSM_1P8 is powered up (when the processor is in BBSM mode).*

4.3.1 Power-up sequence

The power-up sequence of i.MX 91 is defined as follows:

1. Turn on NVCC_BBSM_1P8
2. The SoC assert PMIC_ON_REQ at this point in time.
3. Turn on VDD_SOC and VDD_*_0P8 (includes all analog, PHY, PLL supplies) digital voltage supplies.
4. Turn on all remaining 1.8 V supplies. This includes VDD_*_1P8 analog, PHY and PLL supplies, and any 1.8 V NVCC_XXX I/O supplies.
5. Turn on DDR I/O supplies.

All information provided in this document is subject to legal disclaimers.

© 2026 NXP B.V. All rights reserved.

Downloaded from Arrow.com.

6. Turn on any 3.3 V supplies. This includes any 3.3 V NVCC_XXX I/O supplies and VDD_USB_3P3 (This 3.3 V supply step may be simultaneous with either the 1.8 V or the DDR supplies if desired).
7. POR_B release (asserting during the entire power-up sequence).

4.3.2 Power-down sequence

The power-down sequence of i.MX 91 is defined as follows:

- Turn off VDD_SOC after the other (non-BBSM) power rails or at the same time as other (non-BBSM) rails.
- No sequence for other power rails during power down.

4.4 PLL electrical characteristics

Table 22 shows the PLL electrical parameters.

Table 22. PLL electrical parameters

PLL type	Parameter	Value
AUDIO_PLL1	Clock output range	Up to 650 MHz
	Reference clock	24 MHz
	Lock time	50 µs
	Jitter	±1% of output period, ≥ 50 ps
VIDEO_PLL1	Clock output range	Up to 594 MHz
	Reference clock	24 MHz
	Lock time	50 µs
SYS_PLL1	Clock output range	312.5 MHz — 1 GHz
	Reference clock	24 MHz
	Lock time	70 µs
ARM_PLL	Clock output range	800 MHz — 1400 MHz
	Reference clock	24 MHz
	Lock time	70 µs
DRAM_PLL1	Clock output range	400 MHz — 1000 MHz
	Reference clock	24 MHz
	Lock time	50 µs

4.5 I/O DC parameters

This section includes the DC parameters of the following I/O types:

- General Purpose I/O (GPIO)

All information provided in this document is subject to legal disclaimers.

© 2026 NXP B.V. All rights reserved.

Downloaded from Arrow.com.

- Double Data Rate I/O (DDR) for LPDDR4 modes

4.5.1 General purpose I/O (GPIO) DC parameters

Table 23 shows DC parameters for GPIO pads. The parameters Table 23 are guaranteed per the operating ranges in Table 12, unless otherwise noted.

Table 23. GPIO DC parameters

Parameter	Symbol	Test Conditions	Min	Typ	Max	Unit
High-level output voltage	$V_{OH\ (1.8\ V)}$	DSE = X1, IOH = 1.1 mA DSE = X6, IOH = 6.6 mA	0.8 x NVCC_xxx	—	NVCC_xxx	V
	$V_{OH\ (3.3\ V)}$	DSE = X1, IOH = 2 mA DSE = X4, IOH = 8 mA	0.8 x NVCC_xxx	—	NVCC_xxx	V
Low-level output voltage	$V_{OL\ (1.8\ V)}$	DSE = X1, IOL = 1.1 mA DSE = X6, IOL = 6.6 mA	0	—	0.2 x NVCC_xxx	V
	$V_{OL\ (3.3\ V)}$	DSE = X1, IOL = 2 mA DSE = X4, IOL = 8 mA	0	—	0.2 x NVCC_xxx	V
Low-level input voltage	V_{IL}	NVCC_xxx = 1.65 - 3.465 V; Temp = -40 to 125°C	0	—	0.3 x NVCC_xxx	V
High-level input voltage	V_{IH}	NVCC_xxx = 1.65 - 3.465 V; Temp = -40 to 125°C	0.7 x NVCC_xxx	—	NVCC_xxx	V
Pull-down resistor	Rpd3.3v	NVCC_xxx = 3.0 - 3.465 V; Temp = -40 to 125°C	24	43	87	KΩ
Pull-up resistor	Rpu3.3v		18	37	72	KΩ
Pull-down resistor	Rpd1.8v	NVCC_xxx = 1.65 - 1.95 V; Temp = -40 to 125°C	13	23	48	KΩ
Pull-up resistor	Rpu1.8v		12	22	49	KΩ

Note: *For GPIO pads, when the supplies are ramp-up or/and below operating level, the pad state values are undefined.*
Note: *For PHY pads, the PAD state values are undefined before POR_B is asserted.*

Table 24. Additional leakage parameters

Parameter	Symbol	Condition	Min	Max	Unit
Leakage high	IIH	Non-PHY I/O, 1.65 V - 3.465 V, Temp = -40°C to 125°C | pad = VDDIO[1]	-5	5	µA
Leakage low	IIL	Non-PHY I/O, 1.65 V - 3.465 V, Temp = -40°C to 125°C | pad = VSS[1]	-5	5	

[1] This specification does not apply to PHY, ANALOG, TAMPER0, TAMPER1 I/Os, PMIC_ON_REQ, and PMIC_STBY_REQ.

4.5.2 DDR I/O DC electrical characteristics

The DDR I/O pads support LPDDR4 operational modes. The Double Data Rate Controller (DDRC) is compliant with JEDEC-compliant SDRAMs.

All information provided in this document is subject to legal disclaimers.

© 2026 NXP B.V. All rights reserved.

Downloaded from Arrow.com.

DDRC operation is contingent upon the board's DDR design adherence to the DDR design and layout requirements stated in the hardware development guide for the i.MX 91 application processors.

4.6 I/O AC parameters

This section includes the AC parameters of the following I/O types:

- General Purpose I/O (GPIO)

The GPIO load circuit and output transition time waveforms are shown in Figure 5 and Figure 6.

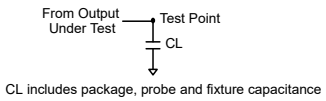

Figure 5. Load circuit for output

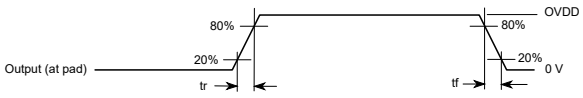

Figure 6. Output transition time waveform

4.6.1 General purpose I/O (GPIO) AC parameters

Table 25. General purpose I/O (GPIO) AC parameters

Symbol	Description	Min	Typ	Max	Unit	Condition
tR	TX rise time	3950	—	5950	ps	Slew rate FSEL1 = 11b, Fast Slew Rate (1.62 V, 1.8 V, 1.98 V), Drive strength X1
tF	TX fall time	4140	—	5600	ps	Slew rate FSEL1 = 11b, Fast Slew Rate (1.62 V, 1.8 V, 1.98 V), Drive strength X1
tR	TX rise time	1890	—	2820	ps	Slew rate FSEL1 = 11b, Fast Slew Rate (1.62 V, 1.8 V, 1.98 V), Drive strength X2
tF	TX fall time	1790	—	2560	ps	Slew rate FSEL1 = 11b, Fast Slew Rate (1.62 V, 1.8 V, 1.98 V), Drive strength X2
tR	TX rise time	675	—	1950	ps	Slew rate FSEL1 = 11b, Fast Slew Rate (1.62 V, 1.8 V, 1.98 V), Drive strength X3
tF	TX fall time	584	—	1730	ps	Slew rate FSEL1 = 11b, Fast Slew Rate

Table continues on the next page...

All information provided in this document is subject to legal disclaimers.

© 2026 NXP B.V. All rights reserved.

Downloaded from Arrow.com.

Table 25. General purpose I/O (GPIO) AC parameters...*continued*

Symbol	Description	Min	Typ	Max	Unit	Condition
						(1.62 V, 1.8 V, 1.98 V), Drive strength X3
tR	TX rise time	521	—	1320	ps	Slew rate FSEL1 = 11b, Fast Slew Rate (1.62 V, 1.8 V, 1.98 V), Drive strength X4
tF	TX fall time	442	—	748	ps	Slew rate FSEL1 = 11b, Fast Slew Rate (1.62 V, 1.8 V, 1.98 V), Drive strength X4
tR	TX rise time	454	—	742	ps	Slew rate FSEL1 = 11b, Fast Slew Rate (1.62 V, 1.8 V, 1.98 V), Drive strength X5
tF	TX fall time	380	—	554	ps	Slew rate FSEL1 = 11b, Fast Slew Rate (1.62 V, 1.8 V, 1.98 V), Drive strength X5
tR	TX rise time	419	—	639	ps	Slew rate FSEL1 = 11b, Fast Slew Rate (1.62 V, 1.8 V, 1.98 V), Drive strength X6
tF	TX fall time	349	—	506	ps	Slew rate FSEL1 = 11b, Fast Slew Rate (1.62 V, 1.8 V, 1.98 V), Drive strength X6
tR	TX rise time	4030	—	5790	ps	Slew rate FSEL1 = 11b, Fast Slew Rate (3 V, 3.3 V, 3.465 V), Drive strength X1
tF	TX fall time	4410	—	6290	ps	Slew rate FSEL1 = 11b, Fast Slew Rate (3 V, 3.3 V, 3.465 V), Drive strength X1
tR	TX rise time	1870	—	2950	ps	Slew rate FSEL1 = 11b, Fast Slew Rate (1.62 V, 1.8 V, 1.98 V), Drive strength X2
tF	TX fall time	1900	—	3310	ps	Slew rate FSEL1 = 11b, Fast Slew Rate (3 V, 3.3 V, 3.465 V), Drive strength X2
tR	TX rise time	774	—	1930	ps	Slew rate FSEL1 = 11b, Fast Slew Rate

Table continues on the next page...

All information provided in this document is subject to legal disclaimers.

© 2026 NXP B.V. All rights reserved.

Downloaded from Arrow.com.

Table 25. General purpose I/O (GPIO) AC parameters...*continued*

Symbol	Description	Min	Typ	Max	Unit	Condition
						(3 V, 3.3 V, 3.465 V), Drive strength X3
tF	TX fall time	719	—	2070	ps	Slew rate FSEL1 = 11b, Fast Slew Rate (3 V, 3.3 V, 3.465 V), Drive strength X3
tR	TX rise time	598	—	1360	ps	Slew rate FSEL1 = 11b, Fast Slew Rate (3 V, 3.3 V, 3.465 V), Drive strength X4
tF	TX fall time	490	—	1590	ps	Slew rate FSEL1 = 11b, Fast Slew Rate (3 V, 3.3 V, 3.465 V), Drive strength X4

4.6.2 DDR I/O AC electrical characteristics

The DDR I/O pads support LPDDR4 operational modes. The DDRC is compliant with JEDEC-compliant SDRAMs.

DDRC operation is contingent upon the board's DDR design adherence to the DDR design and layout requirements stated in the hardware development guide for the i.MX 91 application processor.

4.7 Differential I/O output buffer impedance

The Differential CCM interface is designed to be compatible with TIA/EIA 644-A standard. See, TIA/EIA STANDARD 644-A, *Electrical Characteristics of Low Voltage Differential Signaling (LVDS) Interface Circuits* (2001) for details.

4.7.1 DDR I/O output buffer impedance

DDR output driver and ODT impedances are controlled across PVT using ZQ calibration procedure with a 120 ohm ±1% resistor to ground. Programmable drive strength and ODT impedance targets available in the NXP DDR tool are detailed in the device IBIS model. Impedance deviation (calibration accuracy) is ±10% (Maximum/Minimum impedance) across PVT.

4.8 System modules timing

This section contains the timing and electrical parameters for the modules in each i.MX 91 processor.

4.8.1 Reset timing parameters

Figure 7 shows the reset timing and Table 26 lists the timing parameters.

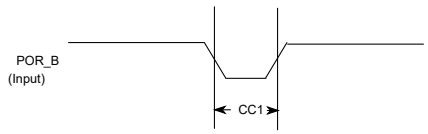

Figure 7. Reset timing diagram

All information provided in this document is subject to legal disclaimers.

© 2026 NXP B.V. All rights reserved.

Downloaded from Arrow.com.

Table 26. Reset timing parameters

ID	Parameter	Min	Max	Unit
CC1	Duration of POR_B to be qualified as valid. Note: POR_B rise/fall times must be 400 µs or less.	1	—	RTC_XTALI cycle

4.8.2 WDOG Reset timing parameters

Figure 8 shows the WDOG reset timing and Table 27 lists the timing parameters.

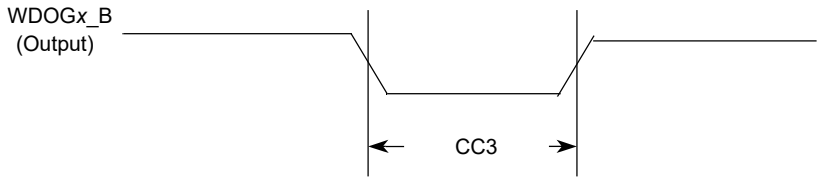

Figure 8. WDOGx_B timing diagram

Table 27. WDOG*x*_B timing parameters

ID	Parameter	Min	Max	Unit
CC3	Duration of WDOG*x*_B Assertion	1	—	RTC_XTALI cycle

Note: *RTC_XTALI is approximately 32 kHz. RTC_XTALI cycle is one period or approximately 30 µs.*

Note: *WDOGx_B output signals (for each one of the Watchdog modules) do not have dedicated pins, but are muxed out through the IOMUX. See the IOMUXC chapter of the i.MX 91 Applications Processor Reference Manual (IMX91RM) for detailed information.*

4.8.3 JTAG timing parameters

Figure 9 depicts the JTAG test clock input timing. Figure 10 depicts the JTAG boundary scan timing. Figure 11 depicts the JTAG test access port. Signal parameters are listed in Table 28.

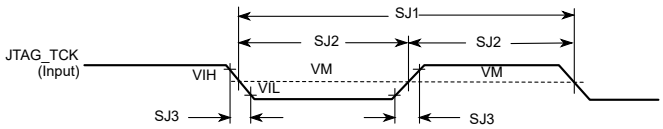

Figure 9. Test Clock Input Timing Diagram

All information provided in this document is subject to legal disclaimers.

© 2026 NXP B.V. All rights reserved.

Downloaded from Arrow.com.

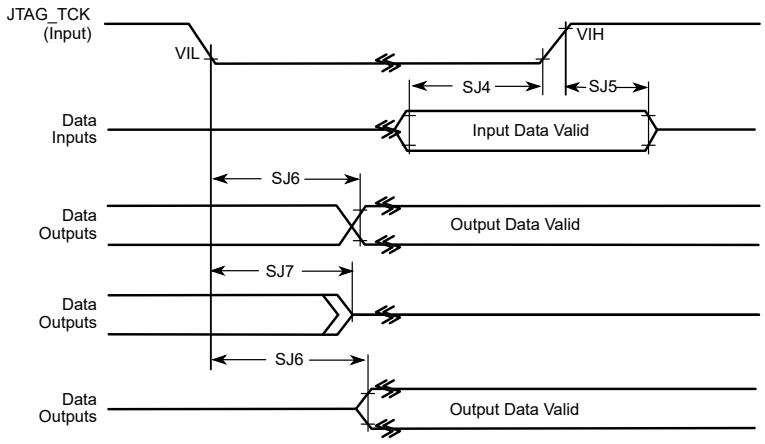

Figure 10. Boundary system (JTAG) timing diagram

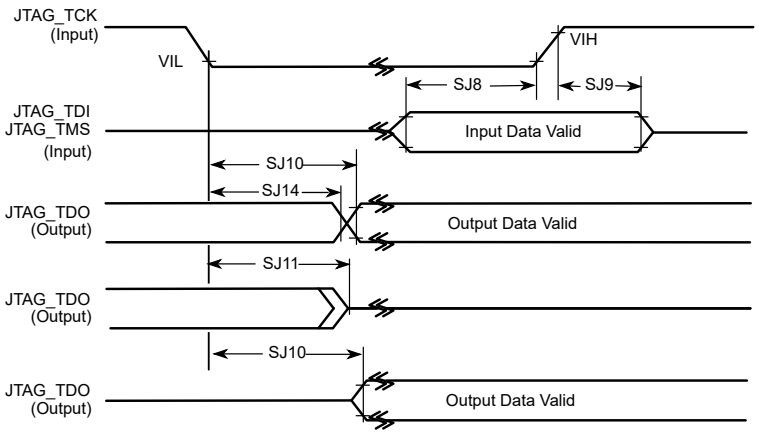

Figure 11. Test Access Port Timing Diagram

Table 28. JTAG Timing[1][2]

ID	Parameter	All Frequencies		Unit
		Min	Max	
SJ0	JTAG_TCK frequency of operation $1/(3xT_{DC})$[3][4]	—	50	MHz
SJ1	JTAG_TCK cycle time in crystal mode	20	—	ns
SJ2	JTAG_TCK clock pulse width measured at V_M[5]	10	—	ns
SJ3	JTAG_TCK rise and fall times	—	3	ns
SJ4	Boundary scan input data set-up time	15	—	ns
SJ5	Boundary scan input data hold time	15	—	ns

Table continues on the next page...

All information provided in this document is subject to legal disclaimers.

© 2026 NXP B.V. All rights reserved.

Downloaded from Arrow.com.

Table 28. JTAG Timing[1][2] *...continued*

ID	Parameter	All Frequencies		Unit
		Min	Max	
SJ6	JTAG_TCK low to output data valid	—	600	ns
SJ7	JTAG_TCK low to output high impedance	—	600	ns
SJ8	JTAG_TMS, JTAG_TDI data set-up time	5	—	ns
SJ9	JTAG_TMS, JTAG_TDI data hold time	5	—	ns
SJ10	JTAG_TCK low to JTAG_TDO data valid	—	14	ns
SJ11	JTAG_TCK low to JTAG_TDO high impedance	—	14	ns
SJ14	JTAG_TCK low to JTAG_TDO data invalid	1	—	ns

[1] Input timing assumes an input signal slew rate of 3 ns (20%/80%).
[2] Output timing valid for maximum external load CL = 25 pF, which is assumed to be a 10 pF load at the end of a 50 Ω, unterminated, 5-inch microstrip trace on standard FR4 (3.3 pF/inch), (25 pF total with margin). For best signal integrity, the series resistance of the transmission line can be equal to the selected RDSON of the I/O pad output driver.
[3] T_{DC} = target frequency of JTAG
[4] 50 MHz frequency is for the JTAG debug interface. For boundary scan, the maximum TCK frequency is 10 MHz.
[5] V_M = mid-point voltage

4.8.4 SWD timing parameters

The DSE[5:0] = 001111 and FSEL1[1:0] = 11 are required drive settings to meet the timing.

Figure 12 depicts the SWD timing.

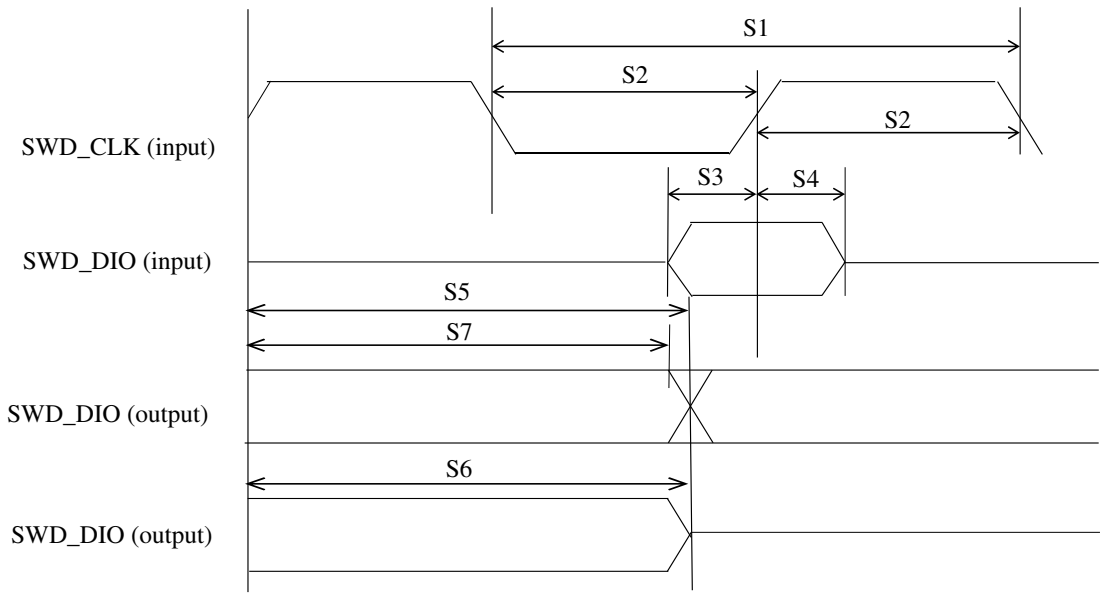

Figure 12. SWD timing

Table 29 shows SWD timing parameters.

All information provided in this document is subject to legal disclaimers.

© 2026 NXP B.V. All rights reserved.

Downloaded from Arrow.com.

Table 29. SWD timing parameters[1][2]

Symbol	Description	Min	Max	Unit
S0	SWD_CLK frequency	—	50	MHz
S1	SWD_CLK cycle time	20	—	ns
S2	SWD_CLK pulse width	10	—	ns
S3	Input data setup time	5	—	ns
S4	Input data hold time	5	—	ns
S5	Output data valid time	—	14	ns
S6	Output high impedance time	—	14	ns
S7	Output data invalid time	0	—	ns

[1] Input timing assumes an input signal slew rate of 3 ns (20%/80%).
[2] Timing valid for maximum external load CL = 25 pF, which is assumed to be a 10 pF load at the end of a 50 Ω, unterminated, 5-inch microstrip trace on standard FR4 (3.3 pF/inch), (25 pF total with margin). For best signal integrity, the series resistance in the transmission line can be equal to the selected RDSON of the I/O pad output.

4.8.5 DDR SDRAM–specific parameters (LPDDR4)

The i.MX 91 Family of processors have been designed and tested to work with JEDEC JESD209-4B—compliant LPDDR4 memory. Timing diagrams and tolerances required to work with these memories are specified in the respective documents and are not reprinted here.

Meeting the necessary timing requirements for a DDR memory system is highly dependent on the components chosen and the design layout of the system as a whole. NXP cannot cover in this document all the requirements needed to achieve a design that meets full system performance over temperature, voltage, and part variation; PCB trace routing, PCB dielectric material, number of routing layers used, placement of bulk/decoupling capacitors on critical power rails, VIA placement, GND and Supply planes layout, and DDR controller/PHY register settings all are factors affecting the performance of the memory system. Consult the hardware user guide for this device and NXP validated design layouts for information on how to properly design a PCB for best DDR performance. NXP strongly recommends duplicating an NXP validated design as much as possible in the design of critical power rails, placement of bulk/decoupling capacitors and DDR trace routing between the processor and the selected DDR memory. All supporting material is readily available on the device web page on https://www.nxp.com/products/processors-and-microcontrollers/arm-processors/i-mx-applications-processors/i-mx-9-processors:IMX9-PROCESSORS.

Processors that demonstrate full DDR performance on NXP validated designs, but do not function on customer designs, are not considered marginal parts. Customers bear the responsibility of properly designing the Printed Circuit Board, correctly simulating and modeling the designed DDR system, and validating the system under all expected operating conditions (temperatures, voltages) prior to releasing their product to market.

Table 30. i.MX 91 DRAM controller supported SDRAM configurations

Parameter	LPDDR4
Number of Controllers	1
Number of Channels	1
Number of Chip Selects	2

Table continues on the next page...

All information provided in this document is subject to legal disclaimers.

© 2026 NXP B.V. All rights reserved.

Downloaded from Arrow.com.

Table 30. i.MX 91 DRAM controller supported SDRAM configurations*...continued*

Parameter	LPDDR4
Bus Width	16-bit
Maximum supported data rate	
• Low drive mode	1600 MT/s
• Nominal drive mode	2400 MT/s

4.9 Display

This section provides information about display subsystem.

4.9.1 LCD Controller (LCDIF) timing parameters

The DSE[5:0] = 001111 and FSEL1[1:0] = 11 are required drive settings to meet the timing.

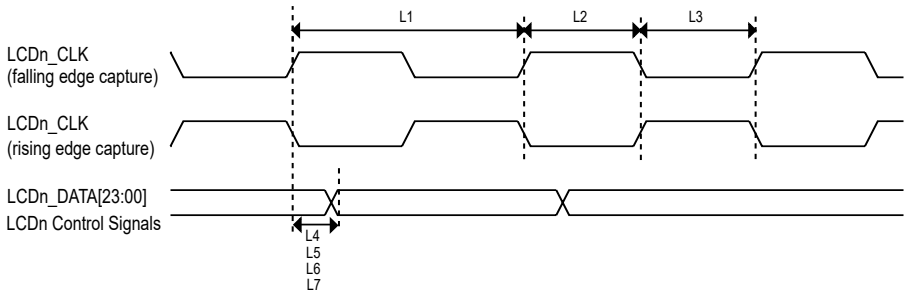

Figure 13. LCD timing

Table 31. LCD timing parameters[1][2]

Num	Characteristic	Symbol	Min	Max	Unit
L1	LCD pixel clock frequency[3]	tCLK(LCD)	—	80	MHz
L2	LCD pixel clock high (falling edge capture)	tCLKH(LCD)	5	—	ns
L3	LCD pixel clock low (rise edge capture)	tCLKL(LCD)	5	—	ns
L4	LCD pixel clock high to data valid (falling edge capture)	td(CLKH-DV)	-1.5	1.5	ns
L5	LCD pixel clock low to data valid (rise edge capture)	td(CLKL-DV)	-1.5	1.5	ns
L6	LCD pixel clock high to control signal valid (falling edge capture)	td(CLKH-CTRLV)	-1.5	1.5	ns
S7	LCD pixel clock low to control signal valid (rise edge capture)	td(CLKL-CTRLV)	-1.5	1.5	ns

[1] Input timing assumes an input signal slew rate of 3 ns (20%/80%).

All information provided in this document is subject to legal disclaimers.

© 2026 NXP B.V. All rights reserved.

Downloaded from Arrow.com.

[2] Output timing valid for maximum external load CL = 25 pF, which is assumed to be a 10 pF load at the end of a 50 ohm. Unterminated, 5-inch microstrip trace on standard FR4 (3.3 pF/inch), (25 pF total with margin). For best signal integrity, the series resistance in the transmission line should be equal to the selected RDSON of the I/O pad output driver.
[3] The maximum frequency supported is 56 MHz when NVCC_xxx operating at 3.3 V.

4.10 Audio

This section provides information about audio subsystem.

4.10.1 SAI switching specifications

This section provides the AC timings for the SAI in Controller (clocks driven) and Target (clocks input) modes. All timings are given for non inverted serial clock polarity (SAI_TCR2[BCP] = 0, SAI_RCR2[BCP] = 0) and non inverted frame sync (SAI_TCR4[FSP] = 0, SAI_RCR4[FSP] = 0). If the polarity of the clock and/or the frame sync have been inverted, all the timings remain valid by inverting the clock signal (SAI_BCLK) and/or the frame sync (SAI_FS) shown in the figures below.

The DSE[5:0] = 001111 and FSEL1[1:0] = 11 are required drive settings to meet the timing.

For the 50 MHz BCLK operation, the BCLK and SYNC must always be in the same direction as the data (source synchronous):

- SAI transmitter must be in asynchronous mode with BCLK and SYNC configuration as outputs
- SAI receiver must be:
  - In asynchronous mode with BCLK and SYNC configuration as inputs
  - In synchronous mode with SAI_RCR2[BCI] = 1

Table 32. Controller mode SAI timing (50 MHz)[1][2][3]

Num	Characteristic	Min	Max	Unit
S1	SAI_MCLK cycle time	20	—	ns
S2	SAI_MCLK pulse width high/low	40%	60%	MCLK period
S3	SAI_BCLK cycle time	20	—	ns
S4	SAI_BCLK pulse width high/low	40%	60%	BCLK period
S5	SAI_BCLK to SAI_FS output valid	—	3	ns
S6	SAI_BCLK to SAI_FS output invalid	-2	—	ns
S7	SAI_BCLK to SAI_TXD valid	—	3	ns
S8	SAI_BCLK to SAI_TXD invalid	-2	—	ns
S9	SAI_RXD/SAI_FS input setup before SAI_BCLK	3	—	ns
S10	SAI_RXD/SAI_FS input hold after SAI_BCLK	2	—	ns

[1] To achieve 50 MHz for BCLK operation, clock must be set in feedback mode.
[2] Input timing assumes an input signal slew rate of 3 ns (20%/80%).
[3] Output timing valid for maximum external load CL = 25 pF, which is assumed to be a 10 pF load at the end of a 50 ohm. Unterminated, 5-inch microstrip trace on standard FR4 (3.3 pF/inch), (25 pF total with margin). For best signal integrity, the series resistance in the transmission line should be equal to the selected RDSON of the I/O pad output driver.

 © 2026 NXP B.V. All rights reserved.

Downloaded from Arrow.com.

Table 33. Controller mode SAI timing (25 MHz)[1][2]

Num	Characteristic	Min	Max	Unit
S1	SAI_MCLK cycle time	40	—	ns
S2	SAI_MCLK pulse width high/low	40%	60%	MCLK period
S3	SAI_BCLK cycle time	40	—	ns
S4	SAI_BCLK pulse width high/low	40%	60%	BCLK period
S5	SAI_BCLK to SAI_FS output valid	—	3	ns
S6	SAI_BCLK to SAI_FS output invalid	-2	—	ns
S7	SAI_BCLK to SAI_TXD valid	—	3	ns
S8	SAI_BCLK to SAI_TXD invalid	-2	—	ns
S9	SAI_RXD/SAI_FS input setup before SAI_BCLK	8	—	ns
S10	SAI_RXD/SAI_FS input hold after SAI_BCLK	0	—	ns

[1] Input timing assumes an input signal slew rate of 3 ns (20%/80%).
[2] Output timing valid for maximum external load CL = 25 pF, which is assumed to be a 10 pF load at the end of a 50 ohm. Unterminated, 5-inch microstrip trace on standard FR4 (3.3 pF/inch), (25 pF total with margin). For best signal integrity, the series resistance in the transmission line should be equal to the selected RDSON of the I/O pad output driver.

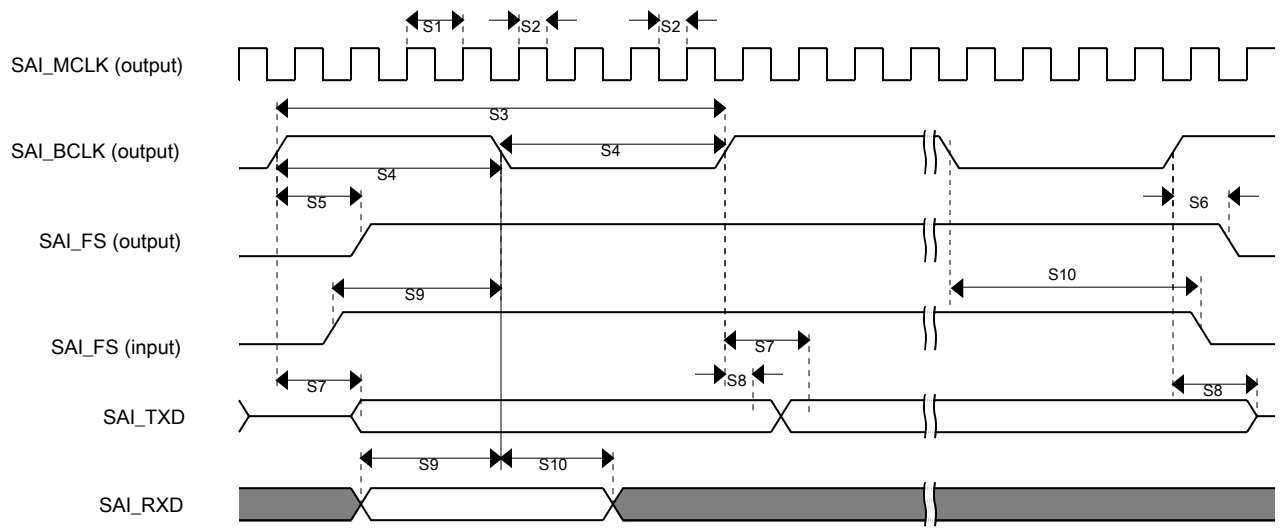

Figure 14. SAI timing—Controller mode

Table 34. Target mode SAI timing (25 MHz)[1][2]

Num	Characteristic	Min	Max	Unit
S11	SAI_BCLK cycle time (input)	40	—	ns

Table continues on the next page...

© 2026 NXP B.V. All rights reserved.

Downloaded from Arrow.com.

Table 34. Target mode SAI timing (25 MHz)[1][2]*...continued*

Num	Characteristic	Min	Max	Unit
S12	SAI_BCLK pulse width high/low (input)	40%	60%	BCLK period
S13	SAI_FS input setup before SAI_BCLK	3	—	ns
S14	SAI_FS input hold after SAI_BCLK	2	—	ns
S15	SAI_BCLK to SAI_TXD/SAI_FS output valid	—	9	ns
S16	SAI_BCLK to SAI_TXD/SAI_FS output invalid	0	—	ns
S17	SAI_RXD setup before SAI_BCLK	3	—	ns
S18	SAI_RXD hold after SAI_BCLK	2	—	ns
S19	SAI_FS input assertion to SAI_TXD output valid[3]	—	25	ns

[1] Input timing assumes an input signal slew rate of 3 ns (20%/80%).
[2] Output timing valid for maximum external load CL = 25 pF, which is assumed to be a 10 pF load at the end of a 50 ohm. Unterminated, 5-inch microstrip trace on standard FR4 (3.3 pF/inch), (25 pF total with margin). For best signal integrity, the series resistance in the transmission line should be equal to the selected RDSON of the I/O pad output driver.
[3] Applies to first bit in each frame and only if the TCR4[FSE] bit is clear.

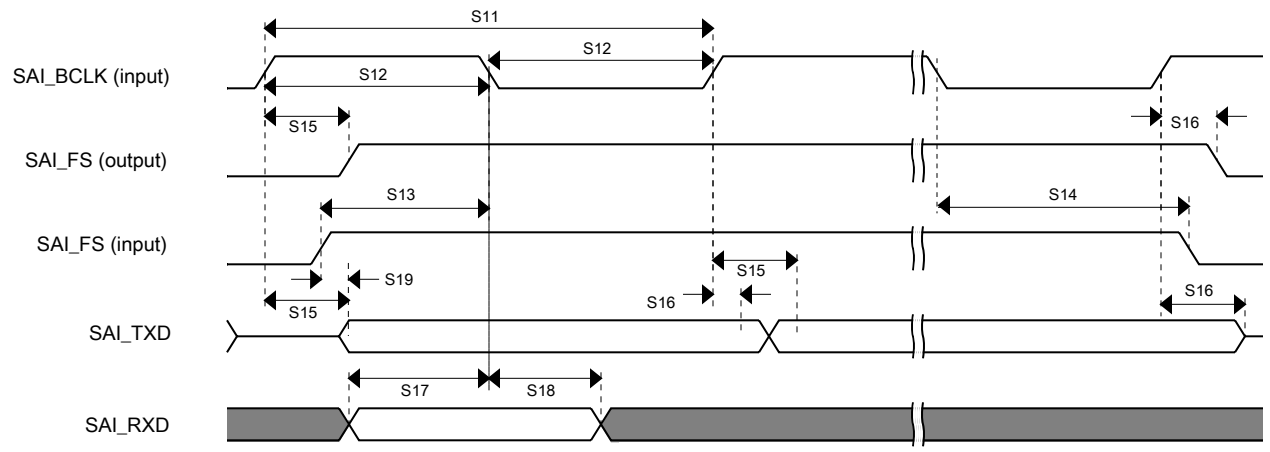

Figure 15. SAI Timing — Target Mode

4.10.2 SPDIF timing parameters

The Sony/Philips Digital Interconnect Format (SPDIF) data is sent using the bi-phase marking code. When encoding, the SPDIF data signal is modulated by a clock that is twice the bit rate of the data signal.

Table 35, Figure 16 and Figure 17 show SPDIF timing parameters for the Sony/Philips Digital Interconnect Format (SPDIF), including the timing of the modulating Rx clock (SPDIF_SR_CLK) for SPDIF in Rx mode and the timing of the modulating Tx clock (SPDIF_ST_CLK) for SPDIF in Tx mode.

The DSE[5:0] = 001111 and FSEL1[1:0] = 11 are required drive settings to meet the timing.

All information provided in this document is subject to legal disclaimers.

© 2026 NXP B.V. All rights reserved.

Downloaded from Arrow.com.

Table 35. SPDIF timing parameters

Parameter	Symbol	Timing Parameter Range		Unit
		Min	Max	
SPDIF_IN Skew: asynchronous inputs, no specs apply	—	—	0.7	ns
SPDIF_OUT output (Load = 50 pf) • Skew • Transition rising • Transition falling	— — —	— — —	1.5 24.2 31.3	ns
SPDIF_OUT output (Load = 30 pf) • Skew • Transition rising • Transition falling	— — —	— — —	1.5 13.6 18.0	ns
Modulating Rx clock (SPDIF_SR_CLK) period	srckp	40.0	—	ns
SPDIF_SR_CLK high period	srckph	16.0	—	ns
SPDIF_SR_CLK low period	srckpl	16.0	—	ns
Modulating Tx clock (SPDIF_ST_CLK) period	stclkp	40.0	—	ns
SPDIF_ST_CLK high period	stclkph	16.0	—	ns
SPDIF_ST_CLK low period	stclkpl	16.0	—	ns

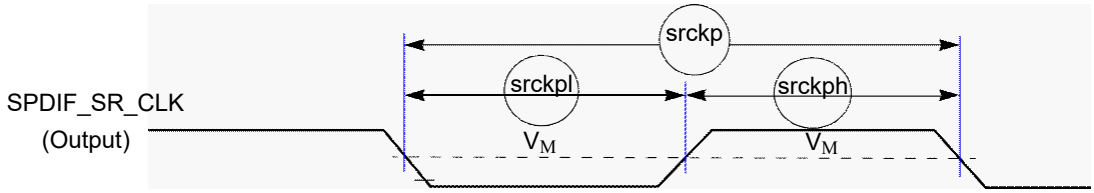

Figure 16. SPDIF_SR_CLK timing diagram

All information provided in this document is subject to legal disclaimers.

© 2026 NXP B.V. All rights reserved.

Downloaded from Arrow.com.

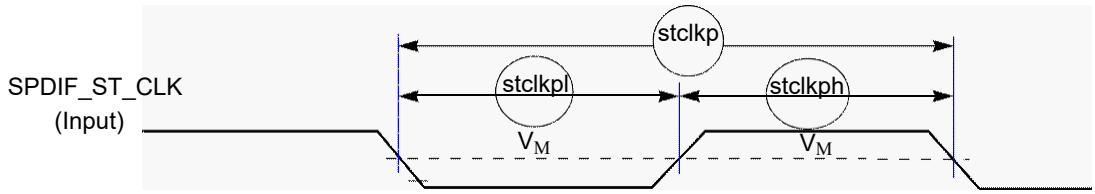

Figure 17. SPDIF_ST_CLK timing diagram

4.10.3 PDM Microphone interface timing parameters

Note: *These timing requirements apply only if the clock divider is enabled (PDM_CTRL2[CLKDIV] = 0), otherwise there are no special timing requirements.*

The PDM microphones must meet the setup and hold timing requirements shown in the following table. The "k" factor value in Table 36 depends on the selected quality mode as shown in Table 37.

Table 36. PDM timing parameters

Parameter	Value
trs, tfs	$<= \frac{\text{floor (kxCLKDIV) - 1}}{\text{@ (moduleNickname)_CLK_ROOTrate}}$ [1]
trh, tfh	≥ 0

[1] @moduleNickname = PDM. Depending on K value, user must make sure floor (K x CLKDIV) > 1 to avoid timing problems.

Table 37. K factor value

Quality factor	K factor
High Quality	1/2
Medium Quality, Very Low Quality 0	1
Low Quality, Very Low Quality 1	2
Very Low Quality 2	4

Figure 18 illustrates the timing requirements for the PDM.

All information provided in this document is subject to legal disclaimers.

© 2026 NXP B.V. All rights reserved.

Downloaded from Arrow.com.

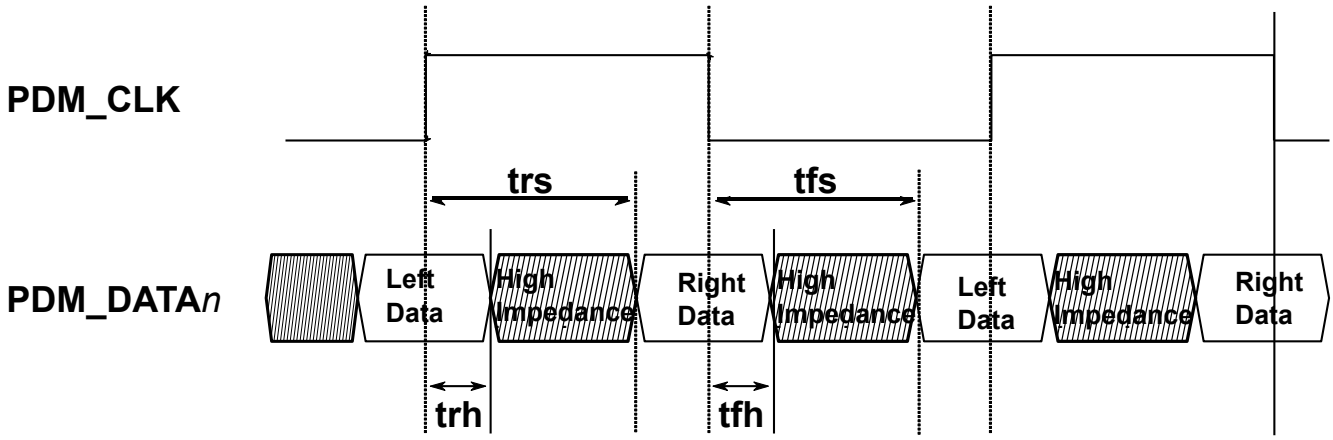

Figure 18. PDM input/output timing requirements

4.10.4 Medium Quality Sound (MQS) electrical specifications

Medium quality sound (MQS) is used to generate medium quality audio via a standard GPIO in the pinmux, allowing the user to connect stereo speakers or headphones to a power amplifier without an additional DAC chip. Two outputs are asynchronous PWM pulses and their maximum frequency is 1/32 x mclk_frequency.

Table 38. MQS specifications

Symbol	Description	Min	Typ	Max	Unit
f_{mclk}[1][2]	Bit clock is used to generate the mclk.	—	24.576	66.5	MHz

[1] Frequency of mclk depends on software settings.
[2] The maximum frequency supported is 56 MHz when NVCC_xxx operating at 3.3 V.

4.11 Analog

The following sections provide information about analog interfaces.

4.11.1 12-bit ADC electrical specifications

All ADC channels meet the 12-bit single-ended accuracy specifications.

4.11.1.1 12-bit ADC electrical specifications

All ADC channels meet the 12-bit single-ended accuracy specifications.

All information provided in this document is subject to legal disclaimers.

© 2026 NXP B.V. All rights reserved.

Downloaded from Arrow.com.

Table 39. ADC electrical specifications

Symbol	Description	Min	Typ	Max	Unit	Notes
V_{ADIN}	Input voltage	V_{GND}	—	V_{DDA}	V	[1]
f_{AD_CK}	ADC clock frequency	20	—	80	MHz	—
C_{sample}	Sample cycles	5.5	—	—	Cycle	—
$C_{compare}$	Fixed compare cycles	—	58	—	Cycle	—
$C_{conversion}$	Conversion cycles	$C_{conversion} = C_{sample} + C_{compare}$			Cycle	—
C_{AD_INPUT}	ADC input capacitance	—	—	7	pF	[2]
R_{AD_INPUT}	ADC input series resistance	—	—	1.25	KΩ	—
DNL	ADC differential nonlinearity	—	±2	—	LSB	[3]
INL	ADC integral nonlinearity	—	±6	—	LSB	[3]
R_{AS}	Analog source resistance	—	—	5	KΩ	—
Bandgap	Output voltage ready time for bandgap	—	1	—	μs	[4]
ENOB	Effective number of bits: Single-ended mode (11 x 11 mm package, PWM)	—	9.8	—	bit	[5],[6],[7],[8]
	Effective number of bits: Single-ended mode (11 x 11 mm package, PFM)	—	9.4	—		
	Effective number of bits: Single-ended mode (9 x 9 mm package, PWM)	—	9.2	—		
	Effective number of bits: Single-ended mode (9 x 9 mm package, PFM)	—	8.5	—		

[1] On or off channels
[2] ADC component plus pad capacitance (~ 2 pF)
[3] After calibration
[4] Based on simulation test
[5] Noise on the ADC reference voltage (VDD_ANA1P8) will result in performance loss of the ADC proportional to the noise present.
[6] Input data used for test is 1 kHz sine wave.
[7] Measured at VREFH = 1.8 V and pwrsel = 2.
[8] ENOB can be lower than shown, if an ADC channel corrupts other ADC channels through capacitive coupling. This coupling may be dominated by board parasitics. Care must be taken not to corrupt the desired channel being measured. This coupling becomes worse at higher analog frequencies and with switching waveforms due to the harmonic content.

All information provided in this document is subject to legal disclaimers.

© 2026 NXP B.V. All rights reserved.

Downloaded from Arrow.com.

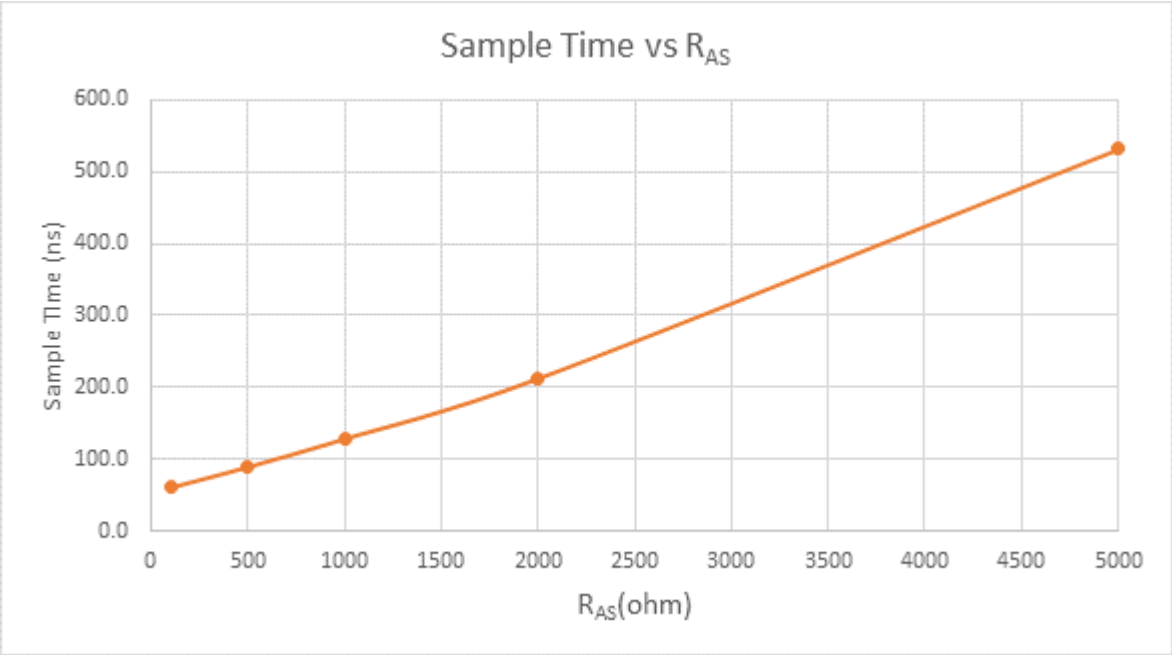

Figure 19. Sample time vs R_{AS}

4.11.1.2 12-bit ADC input impedance equivalent circuit diagram

There is an additional R_{IOMUX} of 350 Ω (from 295 Ω to 405 Ω) resistance if an input goes through the MUX inside the IO and CP of 2.5 pF as shown in Figure 20.

To calculate the sample request time, using the following equation where $R_{ADCtotal} = R_{ADIN} + R_{IOMUX}$, R_{IOMUX} = 350 Ω, C_P = 2.5 pF and B = 11 for 1/4 LSB settling.

$T_{smp_req} = B\ [R_{AS}\ (C_{AS} + C_P + C_{ADIN}) + (R_{AS} + R_{ADCtotal})\ C_{ADIN}]$

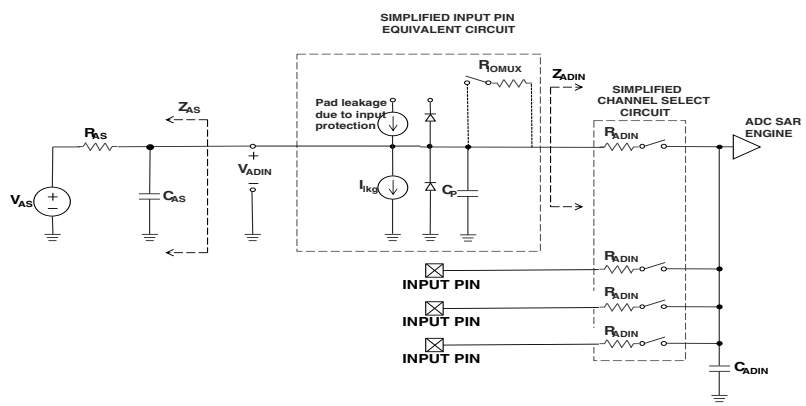

Figure 20. ADC input impedance equivalent circuit diagram

4.12 External peripheral interface parameters

The following subsections provide information on external peripheral interfaces.

All information provided in this document is subject to legal disclaimers.

© 2026 NXP B.V. All rights reserved.

Downloaded from Arrow.com.

4.12.1 Ultra-high-speed SD/SDIO/MMC host interface (uSDHC) AC timing

This section describes the electrical information of the uSDHC, which includes SD/eMMC5.1 (single data rate) timing, eMMC5.1/SD3.0 (dual data rate) timing and SDR50/SDR104 AC timing.

The DSE[5:0] = 001111 and FSEL1[1:0] = 11 are required drive settings to meet the timing.

4.12.1.1 SD3.0/eMMC5.1 (single data rate) AC timing

Figure 21 depicts the timing of SD3.0/eMMC5.1, and Table 40 lists the SD3.0/eMMC5.1 timing characteristics.

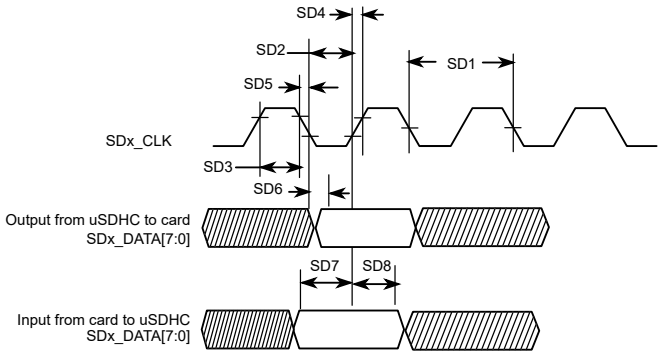

Figure 21. SD3.0/eMMC5.1 (SDR) timing

Table 40. SD3.0/eMMC5.1 (SDR) interface timing specification[1][2]

ID	Parameter	Symbols	Min	Max	Unit
Card Input Clock					
SD1	Clock Frequency (Low Speed)	f_{PP}[3]	0	400	kHz
	Clock Frequency (SD/SDIO Full Speed/High Speed)	f_{PP}[4]	0	25/50	MHz
	Clock Frequency (MMC Full Speed/High Speed)	f_{PP}[5]	0	20/52	MHz
	Clock Frequency (Identification Mode)	f_{OD}	100	400	kHz
SD2	Clock Low Time	t_{WL}	7	—	ns
SD3	Clock High Time	t_{WH}	7	—	ns
SD4	Clock Rise Time	t_{TLH}	—	3	ns
SD5	Clock Fall Time	t_{THL}	—	3	ns
uSDHC Output/Card Inputs SD_CMD, SDx_DATAx (Reference to CLK)					
SD6	uSDHC Output Delay	t_{OD}	-6.6	3.6	ns
uSDHC Input/Card Outputs SD_CMD, SDx_DATAx (Reference to CLK)					
SD7	uSDHC Input Setup Time	t_{ISU}	2.5	—	ns
SD8	uSDHC Input Hold Time[6]	t_{IH}	1.5	—	ns

[1] Input timing assumes an input signal slew rate of 3 ns (20%/80%).

All information provided in this document is subject to legal disclaimers.

© 2026 NXP B.V. All rights reserved.

Downloaded from Arrow.com.

[2] Output timing valid for maximum external load CL = 25 pF, which is assumed to be a 10 pF load at the end of a 50 ohm, unterminated, 5-inch microstrip trace on standard FR4 (3.3 pF/inch), (25 pF total with margin). For best signal integrity, the series resistance in the transmission line should be equal to the selected RDSON of the I/O pad output driver.
[3] In Low-Speed mode, card clock must be lower than 400 kHz, voltage ranges from 2.7 to 3.6 V.
[4] In Normal (Full) -Speed mode for SD/SDIO card, clock frequency can be any value between 0 – 25 MHz. In High-speed mode, clock frequency can be any value between 0 – 50 MHz.
[5] In Normal (Full) -Speed mode for MMC card, clock frequency can be any value between 0 – 20 MHz. In High-speed mode, clock frequency can be any value between 0 – 52 MHz.
[6] To satisfy hold timing, the delay difference between clock input and cmd/data input must not exceed 2 ns.

4.12.1.2 SD3.0/eMMC5.1 (dual data rate) AC timing

Figure 22 depicts the timing of SD3.0/eMMC5.1 (DDR). Table 41 lists the SD3.0/eMMC5.1 (DDR) timing characteristics. Be aware that only DATA is sampled on both edges of the clock (not applicable to CMD).

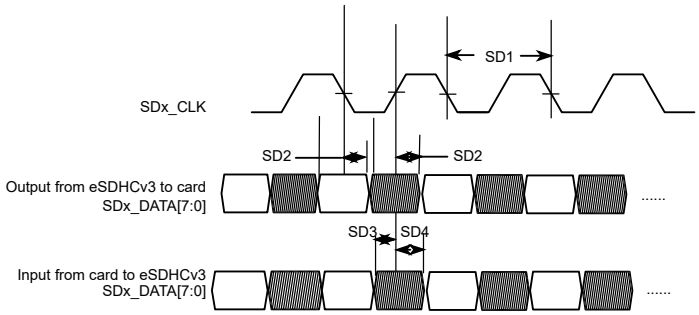

Figure 22. SD3.0/eMMC5.1 (DDR) timing

Table 41. SD3.0/eMMC5.1 (DDR) interface timing specification[1][2]

ID	Parameter	Symbols	Min	Max	Unit
Card Input Clock					
SD1	Clock Frequency (eMMC5.1 DDR)	f_{PP}	0	52	MHz
SD1	Clock Frequency (SD3.0 DDR)	f_{PP}	0	50	MHz
uSDHC Output / Card Inputs SD_CMD, SDx_DATAx (Reference to CLK)					
SD2	uSDHC Output Delay	t_{OD}	2.8	6.8	ns
uSDHC Input / Card Outputs SD_CMD, SDx_DATAx (Reference to CLK)					
SD3	uSDHC Input Setup Time	t_{ISU}	2.4	—	ns
SD4	uSDHC Input Hold Time	t_{IH}	1.5	—	ns

[1] Input timing assumes an input signal slew rate of 3 ns (20%/80%).
[2] Output timing valid for maximum external load CL = 25 pF, which is assumed to be a 10 pF load at the end of a 50 ohm, unterminated, 5-inch microstrip trace on standard FR4 (1.5 pF/inch), (25 pF total with margin). For best signal integrity, the series resistance in the transmission line should be equal to the selected RDSON of the I/O pad output driver.

4.12.1.3 HS400 DDR AC timing

Figure 23 depicts the timing of HS400 mode, Table 42 and Table 43 list the HS400 timing characteristics. Be aware that only data is sampled on both edges of the clock (not applicable to CMD). The CMD input/output timing for HS400 mode is the same as CMD input/output timing for SDR104 mode. Check SD5, SD6, and SD7 parameters in Table 47 for HS400 mode.

All information provided in this document is subject to legal disclaimers.

© 2026 NXP B.V. All rights reserved.

Downloaded from Arrow.com.

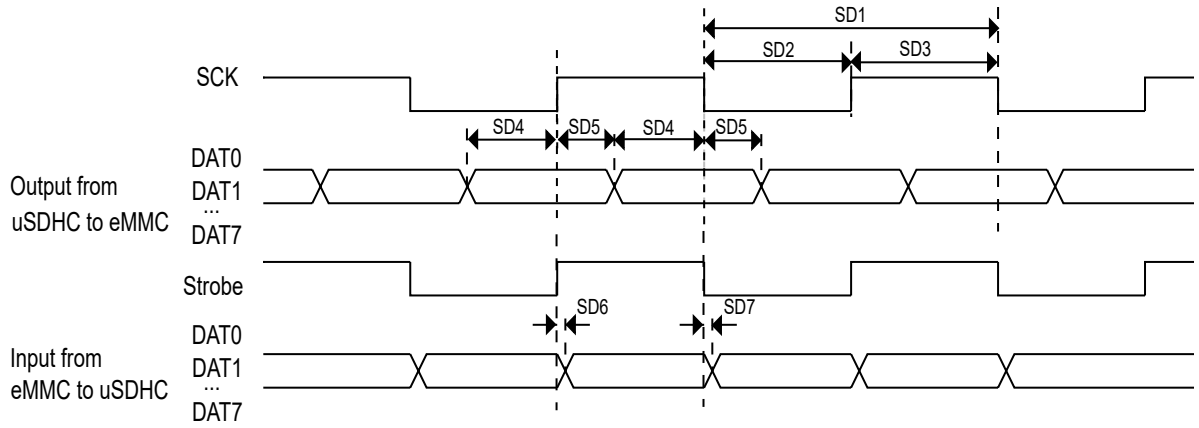

Figure 23. HS400 timing

Table 42. HS400 interface timing specification (Nominal mode)[1][2]

ID	Parameter	Symbols	Min	Max	Unit
Card Input Clock					
SD1	Clock frequency	f_{PP}	0	200	MHz
SD2	Clock low time	t_{CL}	2.2	—	ns
SD3	Clock high time	t_{CH}	2.2	—	ns
uSDHC Output/Card Inputs DAT (Reference to SCK)					
SD4	Output skew from data of edge of SCK	t_{OSkew1}	0.45	—	ns
SD5	Output skew from edge of SCk to data	t_{OSkew2}	0.45	—	ns
uSDHC Input/Card Outputs DAT (Reference to Strobe)					
SD6	uSDHC input skew	t_{RQ}	—	0.45	ns
SD7	uSDHC hold skew	t_{RQH}	—	0.45	ns

[1] Input timing assumes an input signal slew rate of 1 ns (20%/80%).
[2] Output timing valid for maximum external load CL = 15 pF, which is assumed to be a 10 pF load at the end of a 50 ohm, unterminated, 2-inch microstrip trace on standard FR4 (3.3 pF/inch). For best signal integrity, the series resistance of the transmission line should be matched closely to the RDSON of the I/O pad output driver.

Table 43. HS400 interface timing specification (Low drive mode)[1][2]

ID	Parameter	Symbols	Min	Max	Unit
Card Input Clock					
SD1	Clock frequency	f_{PP}	0	133	MHz

Table continues on the next page...

All information provided in this document is subject to legal disclaimers.

© 2026 NXP B.V. All rights reserved.

Downloaded from Arrow.com.

Table 43. HS400 interface timing specification (Low drive mode)[1][2] *...continued*

ID	Parameter	Symbols	Min	Max	Unit
SD2	Clock low time	t_{CL}	3.3	—	ns
SD3	Clock high time	t_{CH}	3.3	—	ns
uSDHC Output/Card Inputs DAT (Reference to SCK)					
SD4	Output skew from data of edge of SCK	t_{OSkew1}	0.675	—	ns
SD5	Output skew from edge of SCk to data	t_{OSkew2}	0.675	—	ns
uSDHC Input/Card Outputs DAT (Reference to Strobe)					
SD6	uSDHC input skew	t_{RQ}	—	0.675	ns
SD7	uSDHC hold skew	t_{RQH}	—	0.675	ns

[1] Input timing assumes an input signal slew rate of 1 ns (20%/80%).
[2] Output timing valid for maximum external load CL = 15 pF, which is assumed to be a 10 pF load at the end of a 50 ohm, unterminated, 2-inch microstrip trace on standard FR4 (3.3 pF/inch). For best signal integrity, the series resistance of the transmission line should be matched closely to the RDSON of the I/O pad output driver.

4.12.1.4 HS200 Mode AC timing

Figure 24 depicts the timing of HS200 mode, Table 44 and Table 45 list the HS200 timing characteristics.

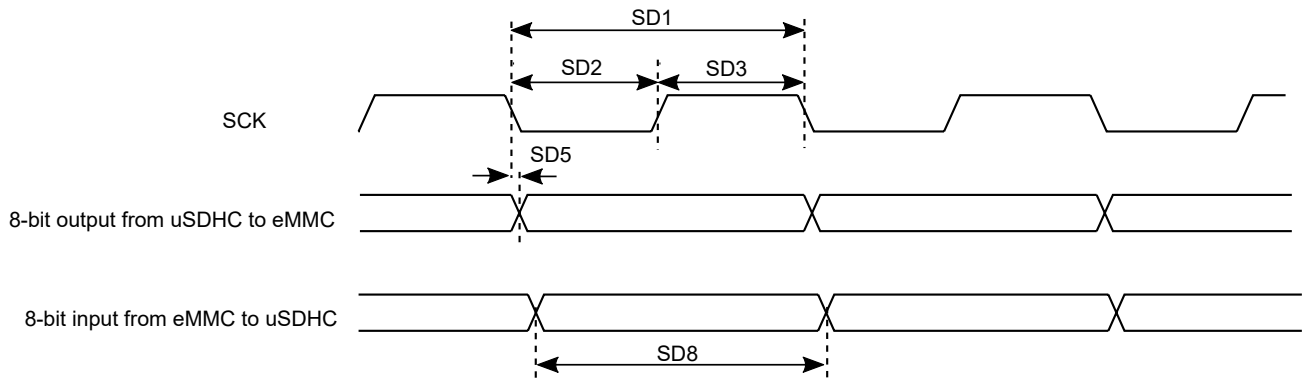

Figure 24. HS200 timing

Table 44. HS200 interface timing specification (Nominal mode)[1][2]

ID	Parameter	Symbols	Min	Max	Unit
Card Input Clock					
SD1	Clock Frequency Period	t_{CLK}	5.0	—	ns
SD2	Clock Low Time	t_{CL}	2.2	—	ns
SD3	Clock High Time	t_{CH}	2.2	—	ns

Table continues on the next page...

All information provided in this document is subject to legal disclaimers.

© 2026 NXP B.V. All rights reserved.

Downloaded from Arrow.com.

Table 44. HS200 interface timing specification (Nominal mode)[1][2]*...continued*

ID	Parameter	Symbols	Min	Max	Unit
uSDHC Output/Card Inputs SD_CMD, SDx_DATAx in HS200 (Reference to CLK)					
SD5	uSDHC Output Delay	t_{OD}	-1.6	1	ns
uSDHC Input/Card Outputs SD_CMD, SDx_DATAx in HS200 (Reference to CLK)[3]					
SD8	uSDHC Input Data Window	t_{ODW}	0.475 x t_{CLK}	—	ns

[1] Input timing assumes an input signal slew rate of 1 ns (20%/80%).
[2] Output timing valid for maximum external load CL = 15 pF, which is assumed to be a 10 pF load at the end of a 50 ohm, unterminated, 2-inch microstrip trace on standard FR4 (3.3 pF/inch). For best signal integrity, the series resistance of the transmission line should be matched closely to the RDSON of the I/O pad output driver.
[3] HS200 is for 8 bits while SDR104 is for 4 bits.

Table 45. HS200 interface timing specification (Low drive mode)[1][2]

ID	Parameter	Symbols	Min	Max	Unit
Card Input Clock					
SD1	Clock Frequency Period	t_{CLK}	7.5	—	ns
SD2	Clock Low Time	t_{CL}	3.3	—	ns
SD3	Clock High Time	t_{CH}	3.3	—	ns
uSDHC Output/Card Inputs SD_CMD, SDx_DATAx in HS200 (Reference to CLK)					
SD5	uSDHC Output Delay	t_{OD}	-1.6	1	ns
uSDHC Input/Card Outputs SD_CMD, SDx_DATAx in HS200 (Reference to CLK)[3]					
SD8	uSDHC Input Data Window	t_{ODW}	0.475 x t_{CLK}	—	ns

[1] Input timing assumes an input signal slew rate of 1 ns (20%/80%).
[2] Output timing valid for maximum external load CL = 15 pF, which is assumed to be a 10 pF load at the end of a 50 ohm, unterminated, 2-inch microstrip trace on standard FR4 (3.3 pF/inch). For best signal integrity, the series resistance of the transmission line should be matched closely to the RDSON of the I/O pad output driver.
[3] HS200 is for 8 bits while SDR104 is for 4 bits.

4.12.1.5 SDR50/SDR104 AC timing

Figure 25 depicts the timing of SDR50/SDR104, Table 46 and Table 47 list the SDR50/SDR104 timing characteristics.

All information provided in this document is subject to legal disclaimers.

© 2026 NXP B.V. All rights reserved.

Downloaded from Arrow.com.

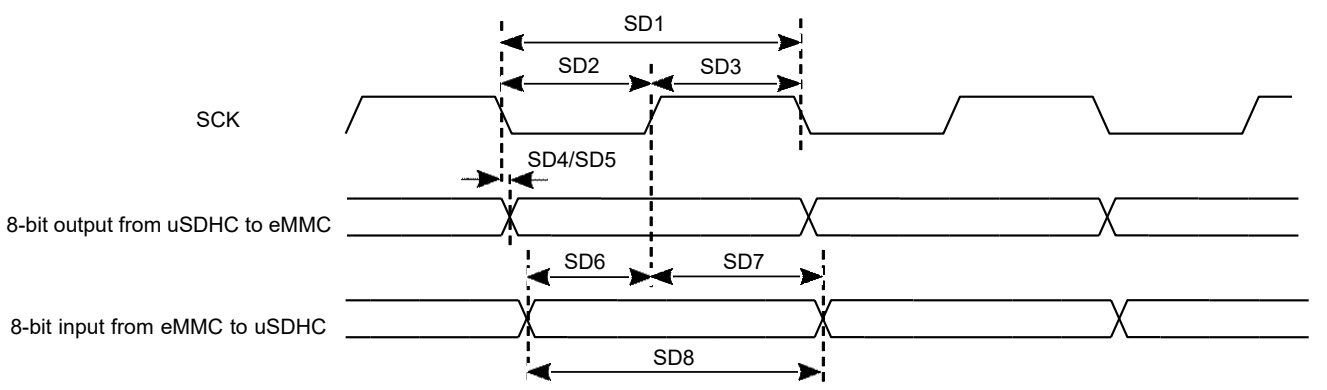

Figure 25. SDR50/SDR104 timing

Table 46. SDR50/SDR104 interface timing specification (Nominal mode)[1][2]

ID	Parameter	Symbols	Min	Max	Unit
Card Input Clock					
SD1	Clock Frequency Period	t_{CLK}	5	—	ns
SD2	Clock Low Time	t_{CL}	2.2	—	ns
SD3	Clock High Time	t_{CH}	2.2	—	ns
uSDHC Output/Card Inputs SD_CMD, SDx_DATAx in SDR50 (Reference to CLK)					
SD4	uSDHC Output Delay	t_{OD}	-3	1	ns
uSDHC Output/Card Inputs SD_CMD, SDx_DATAx in SDR104 (Reference to CLK)					
SD5	uSDHC Output Delay	t_{OD}	-1.6	1	ns
uSDHC Input/Card Outputs SD_CMD, SDx_DATAx in SDR50 (Reference to CLK)					
SD6	uSDHC Input Setup Time	t_{ISU}	2.4	—	ns
SD7	uSDHC Input Hold Time	t_{IH}	1.5	—	ns
uSDHC Input/Card Outputs SD_CMD, SDx_DATAx in SDR104 (Reference to CLK)[3]					
SD8	uSDHC Input Data Window	t_{ODW}	0.5 x t_{CLK}	—	ns

[1] Input timing assumes an input signal slew rate of 1 ns (20%/80%).
[2] Output timing valid for maximum external load CL = 15 pF, which is assumed to be a 10 pF load at the end of a 50 ohm, unterminated, 2-inch microstrip trace on standard FR4 (3.3 pF/inch). For best signal integrity, the series resistance of the transmission line should be matched closely to the RDSON of the I/O pad output driver.
[3] Data window in SDR100 mode is variable.

All information provided in this document is subject to legal disclaimers.

© 2026 NXP B.V. All rights reserved.

Downloaded from Arrow.com.

Table 47. SDR50/SDR104 interface timing specification (Low drive mode)[1][2]

ID	Parameter	Symbols	Min	Max	Unit
Card Input Clock					
SD1	Clock Frequency Period	t_{CLK}	7.5	—	ns
SD2	Clock Low Time	t_{CL}	3.3	—	ns
SD3	Clock High Time	t_{CH}	3.3	—	ns
uSDHC Output/Card Inputs SD_CMD, SDx_DATAx in SDR50 (Reference to CLK)					
SD4	uSDHC Output Delay	t_{OD}	-3	1	ns
uSDHC Output/Card Inputs SD_CMD, SDx_DATAx in SDR104 (Reference to CLK)					
SD5	uSDHC Output Delay	t_{OD}	-1.6	1	ns
uSDHC Input/Card Outputs SD_CMD, SDx_DATAx in SDR50 (Reference to CLK)					
SD6	uSDHC Input Setup Time	t_{ISU}	2.4	—	ns
SD7	uSDHC Input Hold Time	t_{IH}	1.5	—	ns
uSDHC Input/Card Outputs SD_CMD, SDx_DATAx in SDR104 (Reference to CLK)[3]					
SD8	uSDHC Input Data Window	t_{ODW}	0.5 x t_{CLK}	—	ns

[1] Input timing assumes an input signal slew rate of 1 ns (20%/80%).
[2] Output timing valid for maximum external load CL = 15 pF, which is assumed to be a 10 pF load at the end of a 50 ohm, unterminated, 2-inch microstrip trace on standard FR4 (3.3 pF/inch). For best signal integrity, the series resistance of the transmission line should be matched closely to the RDSON of the I/O pad output driver.
[3] Data window in SDR100 mode is variable.

4.12.1.6 Bus operation condition for 3.3 V and 1.8 V signaling

Signaling level of SD/eMMC4.5/5.0/5.1 can be 1.8 V or 3.3 V depending on the working mode. The DC parameters for NVCC_SD2 supplies are identical to those shown in General purpose I/O (GPIO) DC parameters.

4.12.1.7 uSDHC supported modes

For SD:

- All SD 3.0 protocols are supported at full speeds on all three SDHC interfaces. This includes DS, HS, SDR12, SDR25, SDR50, SDR104, and DDR50.
- The maximum supported SDR frequency is 200 MHz which is covered in SDR104 mode, and maximum DDR frequency is 50 MHz as a part of DDR50 mode.

For eMMC:

- eMMC HS400 is only supported on SDHC1 as that is the only one with 8-bit interface.
- eMMC HS200 is supported on all three SDHC interfaces because this protocol supports both a 4-bit mode and an 8-bit mode, which can work on SDHC2 and SDHC3.
- eMMC High Speed DDR, High Speed SDR, and the less than or equal to 26 MHz MMC legacy protocols are also supported on all three SDHC interfaces.

All information provided in this document is subject to legal disclaimers.

© 2026 NXP B.V. All rights reserved.

Downloaded from Arrow.com.

- The maximum supported SDR frequency is 200 MHz which is covered in HS200 mode, and the maximum DDR frequency is 200 MHz as a part of HS400 mode.

uSDHC3 supports up to SDR104 (200 MHz) on primary SD3_* pins, but when it is multiplexing on GPIO_IO[27:22], below are the modes supported:

- eMMC High Speed DDR, High Speed SDR, and the less than or equal to 26 MHz MMC legacy protocols are supported.
- SDR50 (100 MHz) and SDR104 (200 MHz) modes are NOT supported.
- eMMC HS400 and HS200 modes are NOT supported
- The maximum supported SDR and DDR frequency is 50 and 52 MHz

If IO is supplied by 3.3 V, the maximum supported SDR/DDR frequency is 50/52 MHz

4.12.2 Ethernet controller (ENET) AC electrical specifications

Ethernet supports the following key features:

- Support ENET AVB
- Support IEEE 1588
- Support Energy Efficient Ethernet (EEE)
- 1.8 V/3.3 V RMII operation, 1.8 V RGMII operation

The following sections introduce the ENET AC electrical specifications.

4.12.2.1 ENET2 signal mapping

The following timing specs are defined at the chip I/O pin and must be translated appropriately to arrive at timing specifications and constraints for the physical interface.

Table 48. ENET2 signal mapping[1]

Pad name	RGMII	Alt mode	RMII	Alt mode	Direction
ENET2_MDC	RGMII_MDC	Alt 0	RMII_MDC	Alt 0	O
ENET2_MDIO	RGMII_MDIO	Alt 0	RMII_MDIO	Alt 0	I/O
ENET2_TXC	RGMII_TXC	Alt 0	RMII_TX_ER	Alt 1	O
ENET2_TX_CTL	RGMII_TX_CTL	Alt 0	RMII_TX_EN	Alt 0	O
ENET2_TD0	RGMII_TD0	Alt 0	RMII_TD0	Alt 0	O
ENET2_TD1	RGMII_TD1	Alt 0	RMII_TD1	Alt 0	O
ENET2_TD2	RGMII_TD2	Alt 0	RMII_REF_CLK[2]	Alt 1	I/O
ENET2_TD3	RGMII_TD3	Alt 0	—	Alt 0	O
ENET2_RXC	RGMII_RXC	Alt 0	RMII_RX_ER	Alt 1	I
ENET2_RX_CTL	RGMII_RX_CTL	Alt 0	RMII_CRS_DV	Alt 0	I
ENET2_RD0	RGMII_RD0	Alt 0	RMII_RD0	Alt 0	I

Table continues on the next page...

All information provided in this document is subject to legal disclaimers.

© 2026 NXP B.V. All rights reserved.

Downloaded from Arrow.com.

Table 48. ENET2 signal mapping[1]*...continued*

Pad name	RGMII	Alt mode	RMII	Alt mode	Direction
ENET2_RD1	RGMII_RD1	Alt 0	RMII_RD1	Alt 0	I
ENET2_RD2	RGMII_RD2	Alt 0	—	Alt 0	I
ENET2_RD3	RGMII_RD3	Alt 0	—	Alt 0	I

[1] ENET1 is Ethernet QoS with TSN, while ENET2 is Ethernet MAC.
[2] The signal can be either input or output.

4.12.2.2 RMII mode timing

In RMII mode, RMII_REF_CLK is a 50 MHz ± 50 ppm continuous reference clock.

Figure 26 shows RMII mode timing parameters. Table 49 describes the timing parameters (M16–M21) shown in the figure.

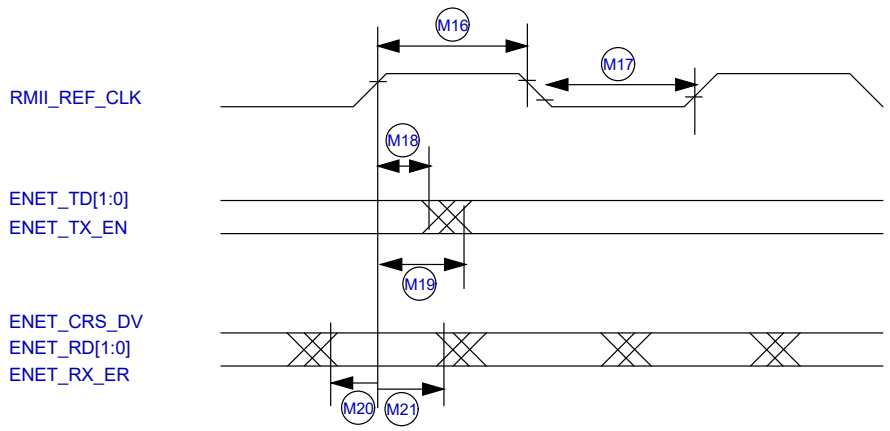

Figure 26. RMII mode signal timing diagram

Table 49. RMII signal timing[1][2][3]

ID	Characteristic	Min.	Max.	Unit
M16	RMII_REF_CLK pulse width high	35%	65%	RMII_REF_CLK period
M17	RMII_REF_CLK pulse width low	35%	65%	RMII_REF_CLK period
M18	RMII_REF_CLK to ENET0_TXD[1:0], ENET_TX_EN invalid	2	—	ns
M19	RMII_REF_CLK to ENET0_TXD[1:0], ENET_TX_EN valid	—	14	ns
M20	ENET_RX_DATA[1:0], ENET_CRS_DV, ENET_RX_ER to RMII_REF_CLK setup	4	—	ns
M21	RMII_REF_CLK to ENET_RX_DATA[1:0], ENET_CRS_DV, ENET_RX_ER hold	2	—	ns

[1] The timings assume the following configuration: DSE[5:0] = 001111 and FSEL1[1:0] = 11.
[2] Input timing assumes an input signal slew rate of 3 ns (20%/80%).

All information provided in this document is subject to legal disclaimers.

© 2026 NXP B.V. All rights reserved.

Downloaded from Arrow.com.

[3] Output timing valid for maximum external load CL = 25 pF, which is assumed to be a 10 pF load at the end of a 50 ohm, unterminated, 5-inch microstrip trace on standard FR4 (3.3 pF/inch), (25 pF total with margin). For best signal integrity, the series resistance in the transmission line should be equal to the selected RDSON of the I/O pad output driver.

4.12.2.3 MII serial management channel timing (ENET_MDIO and ENET_MDC)

The MDC frequency is designed to be equal to or less than 2.5 MHz to be compatible with the IEEE 802.3 MII specification.

Figure 27 shows MII asynchronous input timings. Table 50 describes the timing parameters (M10–M15) shown in the figure.

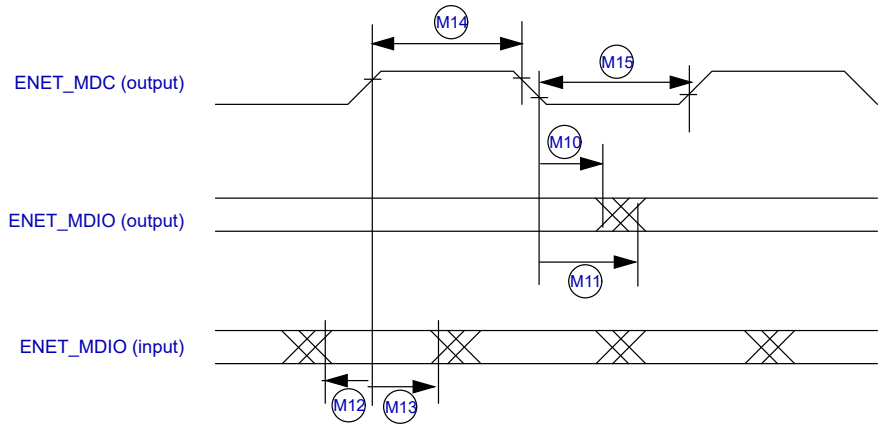

Figure 27. MII serial management channel timing diagram

Table 50. MII serial management channel timing[1][2][3]

ID	Characteristic	Min.	Max.	Unit
M10	ENET_MDC falling edge to ENET_MDIO output invalid (min. propagation delay)	-1.5	—	ns
M11	ENET_MDC falling edge to ENET_MDIO output valid (max. propagation delay)	—	13	ns
M12	ENET_MDIO (input) to ENET_MDC rising edge setup	13	—	ns
M13	ENET_MDIO (input) to ENET_MDC rising edge hold	0	—	ns
M14	ENET_MDC pulse width high	40%	60%	ENET_MDC period
M15	ENET_MDC pulse width low	40%	60%	ENET_MDC period

[1] The timings assume the following configuration: DSE[5:0] = 001111 and FSEL1[1:0] = 11.
[2] Input timing assumes an input signal slew rate of 3 ns (20%/80%).
[3] Output timing valid for maximum external load CL = 25 pF, which is assumed to be a 10 pF load at the end of a 50 ohm. Unterminated, 5-inch microstrip trace on standard FR4 (3.3 pF/inch), (25 pF total with margin). For best signal integrity, the series resistance in the transmission line should be equal to the selected RDSON of the I/O pad output driver.

4.12.2.4 RGMII signal switching specifications

The following timing specifications meet the requirements for RGMII interfaces for a range of transceiver devices.

All information provided in this document is subject to legal disclaimers.

© 2026 NXP B.V. All rights reserved.

Downloaded from Arrow.com.

Table 51. RGMII signal switching specifications[1][2][3][4]

Symbol	Description	Min.	Max.	Unit
T_{cyc}	Clock cycle duration	7.2	8.8	ns
T_{skewT}	Data to clock output skew at transmitter	-500	500	ps
T_{skewR}	Data to clock input skew at receiver	1	2.6	ns
Duty_G	Duty cycle for Gigabit	45	55	%
Duty_T	Duty cycle for 10/100T	40	60	%

[1] The timings assume the following configuration: DSE[5:0] = 001111 and FSEL1[1:0] = 11.
[2] Measured as defined in *EIA/JESD 8-6 1995* with a timing threshold voltage of VDDQ/2.
[3] Output timing valid for maximum external load CL = 15 pF, which is assumed to be a 8 pF load at the end of a 50 ohm, unterminated, 2-inch microstrip trace on standard FR4 (3.3 pF/inch). For best signal integrity, the series resistance in the transmission line should be matched closely to the selected RDSON of the I/O pad output driver.
[4] RGMII timing specifications are only valid for 1.8 V nominal I/O pad supply voltage.

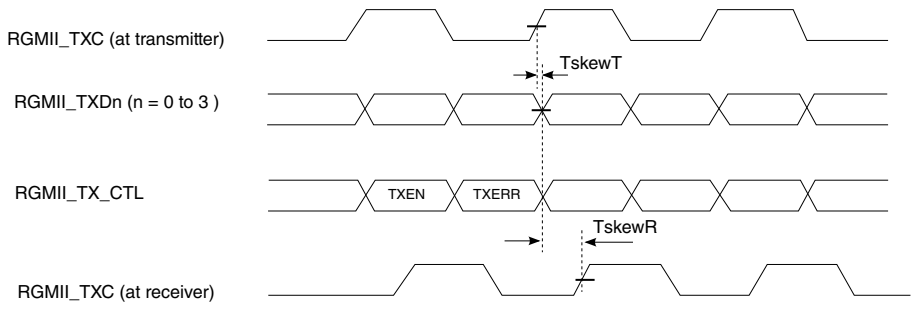

Figure 28. RGMII transmit signal timing diagram original

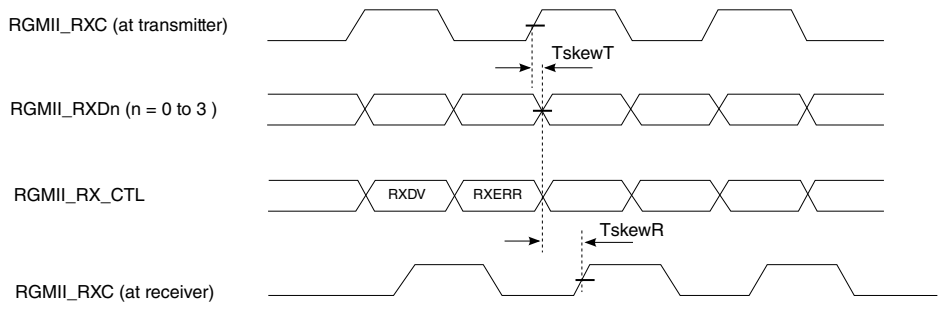

Figure 29. RGMII receive signal timing diagram original

4.12.3 Ethernet Quality-of-Service (QoS) electrical specifications

Ethernet QOS supports the following Time Sensitive Networking (TSN) features:

- 802.1Qbv Enhancements to Scheduling Traffic

All information provided in this document is subject to legal disclaimers.

© 2026 NXP B.V. All rights reserved.

Downloaded from Arrow.com.

- 802.1Qbu Frame preemption
- Time based Scheduling
- 1.8 V/3.3 V RMII operation, 1.8 V RGMII operation

4.12.3.1 Ethernet QOS signal mapping

The following timing specs are defined at the chip I/O pin and must be translated appropriately to arrive at timing specs/constraints for the physical interface.

Table 52. ENET QOS signal mapping[1]

Pad name	RGMII	Alt mode	RMII	Alt mode	Direction
ENET1_MDC	RGMII_MDC	Alt 0	RMII_MDC	Alt 0	O
ENET1_MDIO	RGMII_MDIO	Alt 0	RMII_MDIO	Alt 0	I/O
ENET1_TXC	RGMII_TXC	Alt 0	RMII_TX_ER	Alt 1	O
ENET1_TX_CTL	RGMII_TX_CTL	Alt 0	RMII_TX_EN	Alt 0	O
ENET1_TD0	RGMII_TD0	Alt 0	RMII_TD0	Alt 0	O
ENET1_TD1	RGMII_TD1	Alt 0	RMII_TD1	Alt 0	O
ENET1_TD2	RGMII_TD2	Alt 0	RMII_REF_CLK[2]	Alt 1	I/O
ENET1_TD3	RGMII_TD3	Alt 0	—	Alt 0	O
ENET1_RXC	RGMII_RXC	Alt 0	RMII_RX_ER	Alt 1	I
ENET1_RX_CTL	RGMII_RX_CTL	Alt 0	RMII_CRS_DV	Alt 0	I
ENET1_RD0	RGMII_RD0	Alt 0	RMII_RD0	Alt 0	I
ENET1_RD1	RGMII_RD1	Alt 0	RMII_RD1	Alt 0	I
ENET1_RD2	RGMII_RD2	Alt 0	—	Alt 0	I
ENET1_RD3	RGMII_RD3	Alt 0	—	Alt 0	I

[1] ENET1 is Ethernet QoS with TSN, while ENET2 is Ethernet MAC.
[2] The signal can be either input or output.

4.12.3.2 RMII mode timing

In RMII mode, RMII_REF_CLK is a 50 MHz ± 50 ppm continuous reference clock.

Figure 30 shows RMII mode timing parameters. Table 53 describes the timing parameters (M16–M21) shown in the figure.

All information provided in this document is subject to legal disclaimers.

© 2026 NXP B.V. All rights reserved.

Downloaded from Arrow.com.

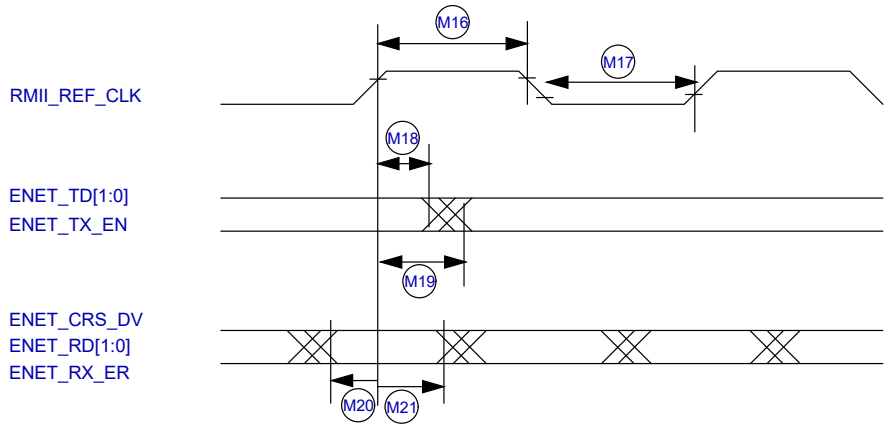

Figure 30. RMII mode signal timing diagram

Table 53. RMII signal timing[1][2][3]

ID	Characteristic	Min.	Max.	Unit
M16	RMII_REF_CLK pulse width high	35%	65%	RMII_REF_CLK period
M17	RMII_REF_CLK pulse width low	35%	65%	RMII_REF_CLK period
M18	RMII_REF_CLK to ENET0_TXD[1:0], ENET_TX_EN invalid	2	—	ns
M19	RMII_REF_CLK to ENET0_TXD[1:0], ENET_TX_EN valid	—	14	ns
M20	ENET_RX_DATA[1:0], ENET_CRS_DV, ENET_RX_ER to RMII_REF_CLK setup	4	—	ns
M21	RMII_REF_CLK to ENET_RX_DATA[1:0], ENET_CRS_DV, ENET_RX_ER hold	2	—	ns

[1] The timings assume the following configuration: DSE[5:0] = 001111 and FSEL1[1:0] = 11.
[2] Input timing assumes an input signal slew rate of 3 ns (20%/80%).
[3] Output timing valid for maximum external load CL = 25 pF, which is assumed to be a 10 pF load at the end of a 50 ohm, unterminated, 5-inch microstrip trace on standard FR4 (3.3 pF/inch), (25 pF total with margin). For best signal integrity, the series resistance in the transmission line should be equal to the selected RDSON of the I/O pad output driver.

4.12.3.3 MII serial management channel timing (ENET_MDIO and ENET_MDC)

The MDC frequency is designed to be equal to or less than 2.5 MHz to be compatible with the IEEE 802.3 MII specification.

Figure 31 shows MII asynchronous input timings. Table 54 describes the timing parameters (M10–M15) shown in the figure.

All information provided in this document is subject to legal disclaimers.

© 2026 NXP B.V. All rights reserved.

Downloaded from Arrow.com.

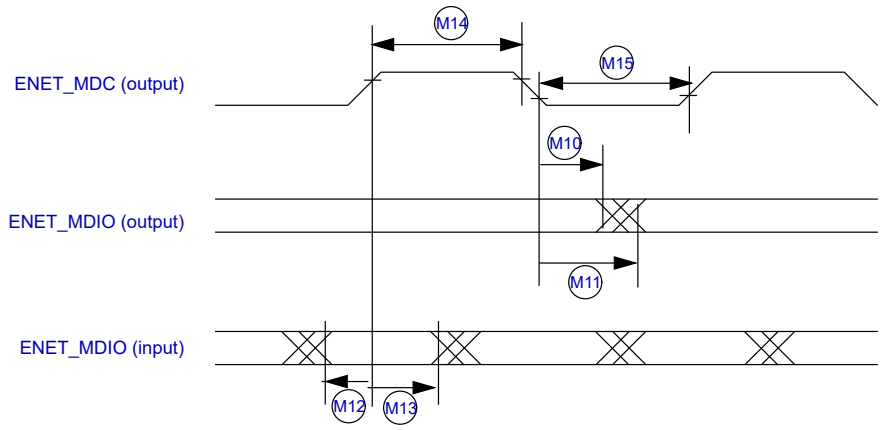

Figure 31. MII serial management channel timing diagram

Table 54. MII serial management channel timing[1][2][3]

ID	Characteristic	Min.	Max.	Unit
M10	ENET_MDC falling edge to ENET_MDIO output invalid (min. propagation delay)	-1.5	—	ns
M11	ENET_MDC falling edge to ENET_MDIO output valid (max. propagation delay)	—	13	ns
M12	ENET_MDIO (input) to ENET_MDC rising edge setup	13	—	ns
M13	ENET_MDIO (input) to ENET_MDC rising edge hold	0	—	ns
M14	ENET_MDC pulse width high	40%	60%	ENET_MDC period
M15	ENET_MDC pulse width low	40%	60%	ENET_MDC period

[1] The timings assume the following configuration: DSE[5:0] = 001111 and FSEL1[1:0] = 11.
[2] Input timing assumes an input signal slew rate of 3 ns (20%/80%).
[3] Output timing valid for maximum external load CL = 25 pF, which is assumed to be a 10 pF load at the end of a 50 ohm. Unterminated, 5-inch microstrip trace on standard FR4 (3.3 pF/inch), (25 pF total with margin). For best signal integrity, the series resistance in the transmission line should be equal to the selected RDSON of the I/O pad output driver.

4.12.3.4 RGMII signal switching specifications

The following timing specifications meet the requirements for RGMII interfaces for a range of transceiver devices.

Table 55. RGMII signal switching specifications[1][2][3][4]

Symbol	Description	Min.	Max.	Unit
T_{cyc}	Clock cycle duration	7.2	8.8	ns
T_{skewT}	Data to clock output skew at transmitter	-500	500	ps
T_{skewR}	Data to clock input skew at receiver	1	2.6	ns

Table continues on the next page...

All information provided in this document is subject to legal disclaimers.

© 2026 NXP B.V. All rights reserved.

Downloaded from Arrow.com.

Table 55. RGMII signal switching specifications[1][2][3][4]*...continued*

Symbol	Description	Min.	Max.	Unit
Duty_G	Duty cycle for Gigabit	45	55	%
Duty_T	Duty cycle for 10/100T	40	60	%

[1] The timings assume the following configuration: DSE[5:0] = 001111 and FSEL1[1:0] = 11.
[2] Measured as defined in *EIA/JESD 8-6 1995* with a timing threshold voltage of VDDQ/2.
[3] Output timing valid for maximum external load CL = 15 pF, which is assumed to be a 8 pF load at the end of a 50 ohm, unterminated, 2-inch microstrip trace on standard FR4 (3.3 pF/inch). For best signal integrity, the series resistance in the transmission line should be matched closely to the selected RDSON of the I/O pad output driver.
[4] RGMII timing specifications are only valid for 1.8 V nominal I/O pad supply voltage.

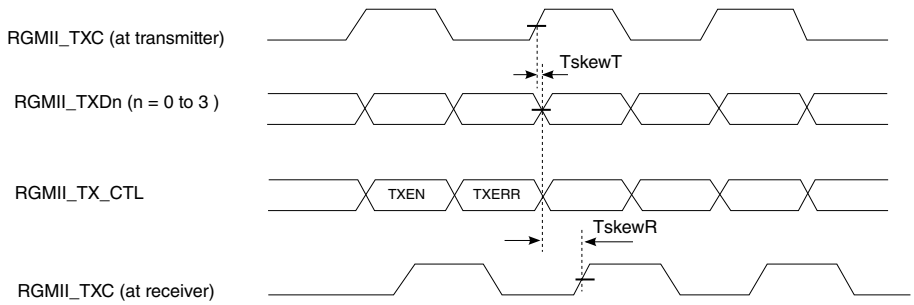

Figure 32. RGMII transmit signal timing diagram original

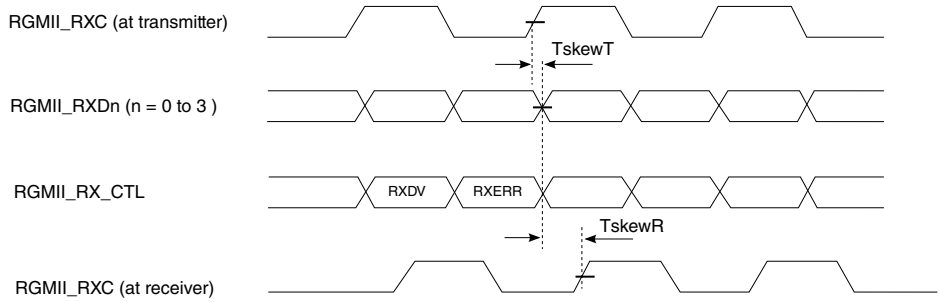

Figure 33. RGMII receive signal timing diagram original

4.12.4 LPSPI timing parameters

The Low Power Serial Peripheral Interface (LPSPI) provides a synchronous serial bus with Controller and Peripheral operations. Many of the transfer attributes are programmable. The following tables provide timing characteristics for classic LPSPI timing modes.

All timing is shown with respect to 20% V_{DD} and 80% V_{DD} thresholds, unless noted, as well as input signal transitions of 3 ns and a 25 pF maximum load on all LPSPI pins.

The DSE[5:0] = 001111 and FSEL1[1:0] = 11 are required drive settings to meet the timing.

All information provided in this document is subject to legal disclaimers.

© 2026 NXP B.V. All rights reserved.

Downloaded from Arrow.com.

Table 56. LPSPI Controller mode timing[1],[2]

Number	Symbol	Description	Min.	Max.	Units	Note
1	f_{SCK}	Frequency of LPSPI clock[3]	—	30	MHz	[4]
			—	60	MHz	[5]
2	t_{SCK}	SCK period	2 x t_{periph}	—	ns	[6]
3	t_{Lead}	Enable lead time	1	—	t_{periph}	—
4	t_{Lag}	Enable lag time	1	—	t_{periph}	—
5	t_{WSCK}	Clock (SCK) high or low time	t_{SCK} / 2 - 3	t_{SCK} / 2 + 3	ns	—
6	t_{SU}	Data setup time (inputs)	8	—	ns	[7],[8]
7	t_{HI}	Data hold time (inputs)	0	—	ns	[7]
8	t_V	Data valid (after SCK edge)	—	2.5	ns	—
9	t_{HO}	Data hold time (outputs)	-2.5	—	ns	—

[1] Input timing assumes an input signal slew rate of 3 ns (20%/80%).
[2] Output timing valid for maximum external load CL = 25 pF, which is assumed to be a 10 pF load at the end of a 50 ohm. Unterminated, 5-inch microstrip trace on standard FR4 (3.3 pF/inch), (25 pF total with margin). For best signal integrity, the series resistance in the transmission line should be equal to the selected RDSON of the I/O pad output driver.
[3] The maximum frequency supported is 56 MHz when NVCC_xxx operating at 3.3 V.
[4] The clock driver in the LPSPI module for f_{periph} must guaranteed this limit is not exceeded.
[5] In Controller loopback mode when LPSPI_CFGR1[SAMPLE] bit is 1.
[6] f_{periph} = Functional clock / (2 ^ PRESCALE) and t_{periph} = 1 / f_{periph}
[7] If LPSPI_CFGR1[SAMPLE] bit is 1, the data setup time (inputs) / data hold time (inputs) specifications are same with the one in Peripheral mode.
[8] For 3.3 V I/O supply, tSU (Data setup time) parameter value is 9 ns in LPSPI Controller mode.

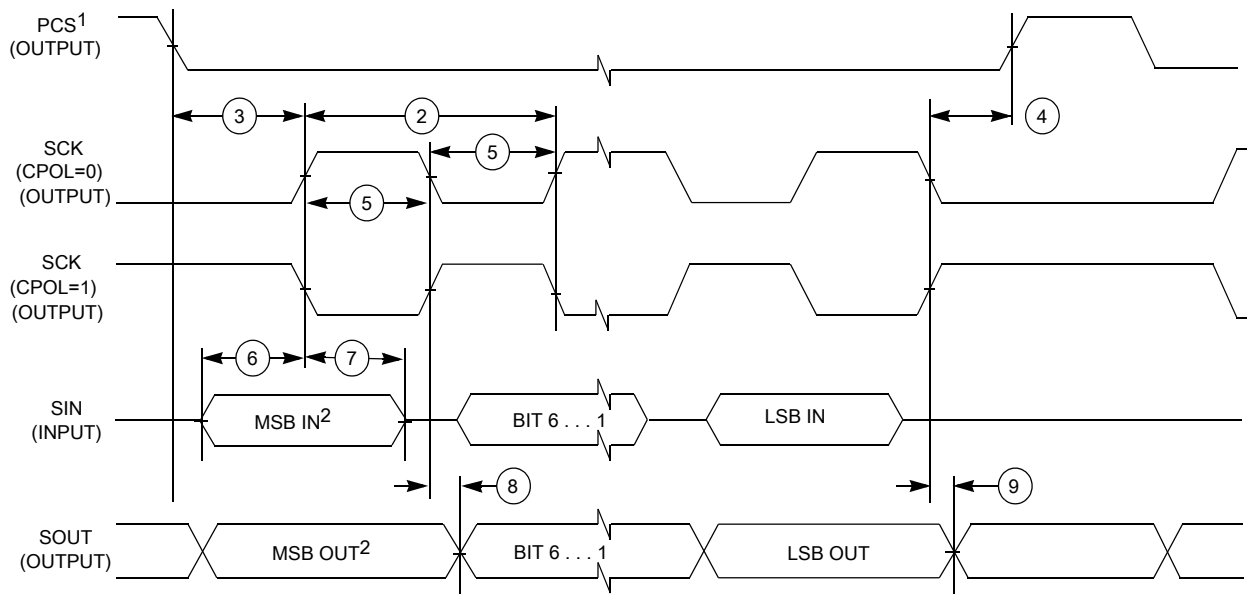

1. If configured as an output.
2. LSBF = 0. For LSBF = 1, bit order is LSB, bit 1, ..., bit 6, MSB.

Figure 34. LPSPI Controller mode timing (CPHA = 0)

All information provided in this document is subject to legal disclaimers.

© 2026 NXP B.V. All rights reserved.

Downloaded from Arrow.com.

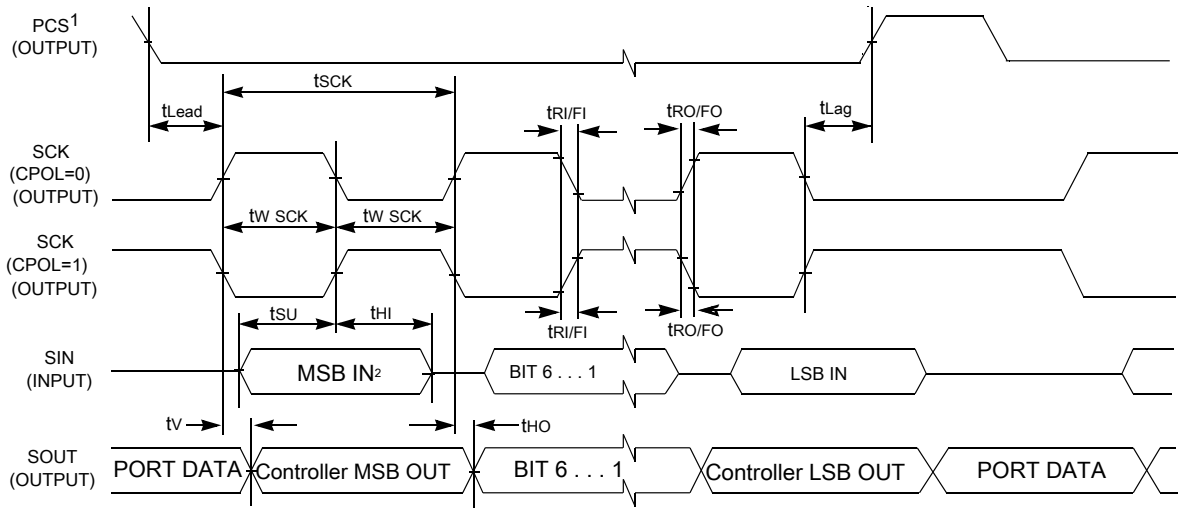

1.If configured as output
2. LSBF = 0. For LSBF = 1, bit order is LSB, bit 1, ..., bit 6, MSB.

Figure 35. LPSPI Controller mode timing (CPHA = 1)

Table 57. LPSPI Peripheral mode timing[1],[2]

Number	Symbol	Description	Min.	Max.	Units	Note
1	f_{SCK}	Frequency of LPSPI clock	0	30	MHz	—
2	t_{SCK}	SCK period	2 x t_{periph}	—	ns	[3]
3	t_{Lead}	Enable lead time	1	—	t_{periph}	—
4	t_{Lag}	Enable lag time	1	—	t_{periph}	—
5	t_{WSCK}	Clock (SCK) high or low time	t_{SCK} / 2 - 5	t_{SCK} / 2 + 5	ns	—
6	t_{SU}	Data setup time (inputs)	3	—	ns	—
7	t_{HI}	Data hold time (inputs)	3	—	ns	—
8	t_a	Peripheral access time	—	20	ns	[4]
9	t_{dis}	Peripheral MISO disable time	—	20	ns	[5]
10	t_V	Data valid (after SCK edge)	—	8	ns	[6]
11	t_{HO}	Data hold time (outputs)	0	—	ns	—

[1] Input timing assumes an input signal slew rate of 3 ns (20%/80%).
[2] Output timing valid for maximum external load CL = 25 pF, which is assumed to be a 10 pF load at the end of a 50 ohm. Unterminated, 5-inch microstrip trace on standard FR4 (3.3 pF/inch), (25 pF total with margin). For best signal integrity, the series resistance in the transmission line should be equal to the selected RDSON of the I/O pad output driver.
[3] f_{periph} = Functional clock / (2 ^ PRESCALE) and t_{periph} = 1 / f_{periph}
[4] Time to data active from high-impedance state
[5] Hold time to high-impedance state
[6] When operating at 3.3 V I/O supply, this parameter value is 9 ns.

All information provided in this document is subject to legal disclaimers.

© 2026 NXP B.V. All rights reserved.

Downloaded from Arrow.com.

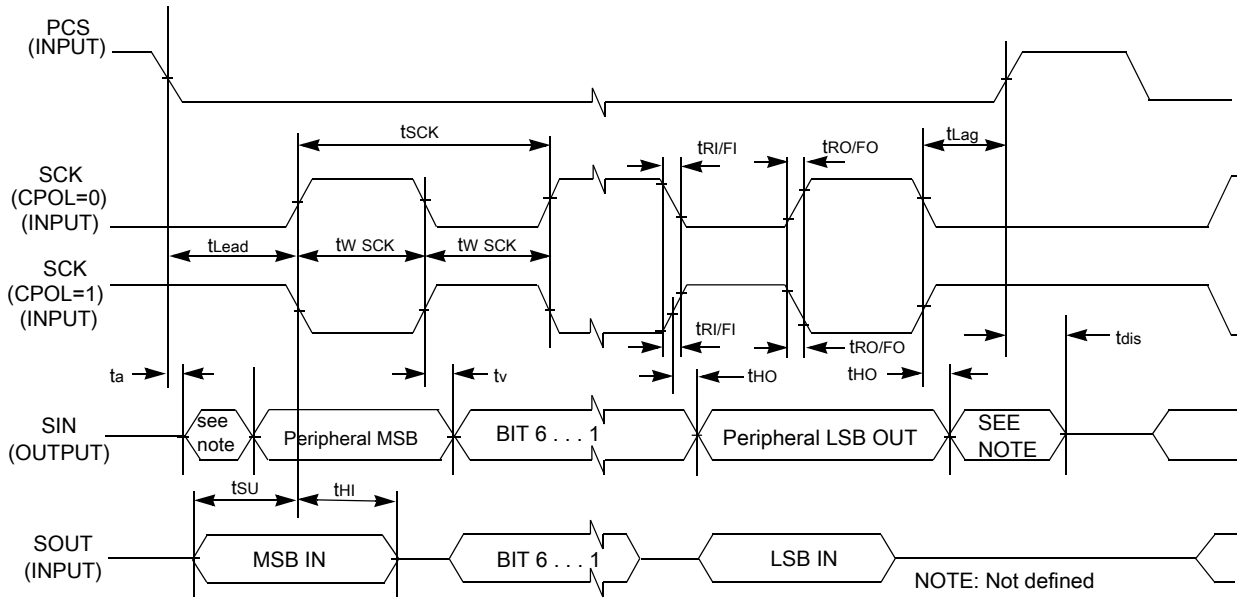

Figure 36. LPSPI Peripheral mode timing (CPHA = 0)

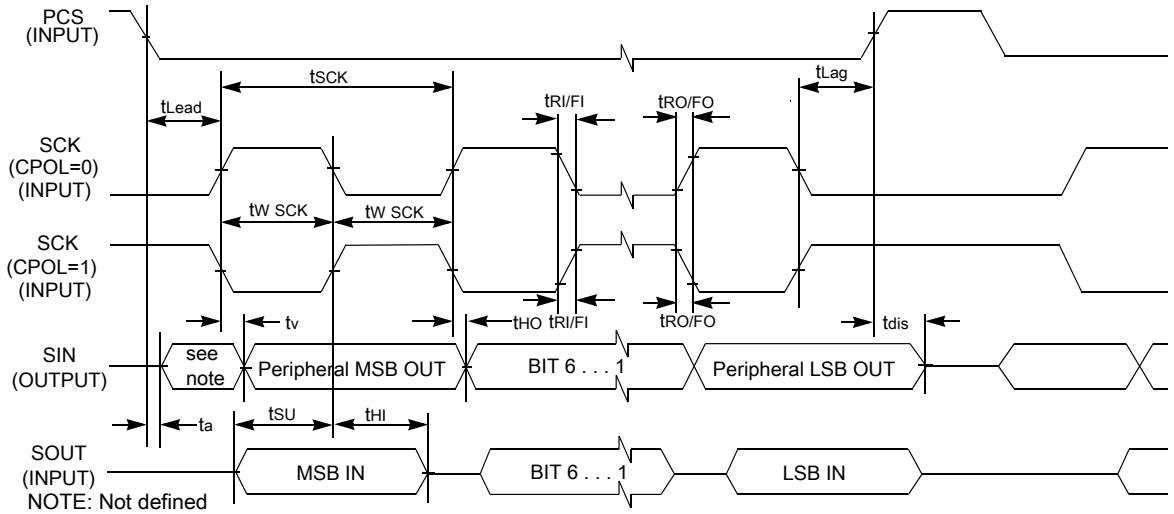

Figure 37. LPSPI Peripheral mode timing (CPHA = 1)

4.12.5 LPI2C timing parameters

This section describes the timing parameters of the LPI2C module.

Table 58. LPI2C module timing parameters[1]

Symbol	Description		Min	Max	Unit	Notes
f_{SCL}	SCL clock frequency	Standard mode (Sm)	0	100	kHz	[2]
		Fast mode (Fm)	0	400		
		Fast mode Plus (Fm+)	0	1000		

Table continues on the next page...

© 2026 NXP B.V. All rights reserved.

Downloaded from Arrow.com.

Table 58. LPI2C module timing parameters[1]*...continued*

Symbol	Description		Min	Max	Unit	Notes
		High speed mode (Hs-mode)	0	3400		
		Ultra Fast mode (UFm)	0	5000		

[1] For more details, see *UM10204 I2C-bus specification and user manual*.
[2] Standard, Fast, Fast+, and Ultra Fast modes are supported; High speed mode (HS) in target mode.

4.12.6 Improved Inter-Integrated Circuit Interface (I3C) specifications

Unless otherwise specified, I3C specifications are timed to/from the V_{IH} and/or V_{IL} signal points.

The DSE[5:0] = 001111 and FSEL1[1:0] = 11 are required drive settings to meet the timing.

4.12.6.1 I3C Push-Pull Timing Parameters for SDR Mode

I3C interface is not supported on GPIO-Standard-plus pad type for 5 V operation. Measurements are with maximum output load of 30 pf, input transition of 1 ns.

Table 59. I3C Push-Pull Timing Parameters for SDR Mode

Symbol	Description	Min	Typ	Max	Unit	Condition
f_{SCL}	SCL Clock Frequency	0.01	12.5	12.9	MHz	$f_{SCL} = 1 / (t_{DIG_L} + t_{DIG_H})$
t_{DIG_L}	SCL Clock Low Period [1][2]	32	—	—	ns	—
t_{DIG_H}	SCL Clock High Period [2]	32	—	—	ns	—
t_{SCO}	Clock in to Data Out for Target [3][4]	—	—	12	ns	—
t_{CR}	SCL Clock Rise Time [5]	—	—	150e06 * 1 / f_{SCL} (capped at 60)	ns	—
t_{CF}	SCL Clock Fall Time [5]	—	—	150e06 * 1 / f_{SCL} (capped at 60)	ns	—
t_{HD_PP}	SDA Signal Data Hold in Push-Pull Mode, Target [6][7]	0	—	—	—	Applicable for target and controller loopback modes
t_{SU_PP}	SDA Signal Data Setup in Push-Pull Mode	3	—	N/A	ns	Applicable for target and controller loopback modes

[1] As both edges are used, the hold time needs to be satisfied for the respective edges; i.e., t_{CF} + 3 for falling edge clocks, and t_{CR} + 3 for rising edge clocks.
[2] t_{DIG_L} and t_{DIG_H} are the clock Low and High periods as seen at the receiver end of the I3C Bus using V_{IL} and V_{IH} (see Figure 30)
[3] Pad delay based on 90 Ω / 4 mA driver and 50 pF load. Note that Controller may be a Target in a multi-Controller system, and thus shall also adhere to this requirement
[4] Devices with more than 12ns of t_{SCO} delay shall set the limitation bit in the BCR, and shall support the GETMXDS CCC to allow the Controller to read this value and adjust computations accordingly. For purposes of system design and test conformance, this parameter should be considered together with pad delay, bus capacitance, propagation delay, and clock triggering points.
[5] The clock maximum rise/fall time is capped at 60 ns. For lower frequency rise and fall the maximum value is limited at 60 ns, and is not dependent upon the clock frequency.
[6] SDA Input Hold time in Target mode is 1 ns.

All information provided in this document is subject to legal disclaimers.

© 2026 NXP B.V. All rights reserved.

Downloaded from Arrow.com.

[7] t_{HD_PP} is a Hold time parameter for Push-Pull Mode that has a different value for Controller mode vs. Target mode. In SDR Mode the Hold time parameter is referred to as t_{HD_SDR}.

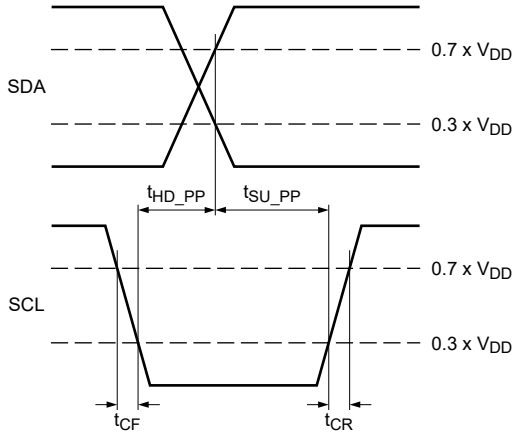

Figure 38. Controller out timing

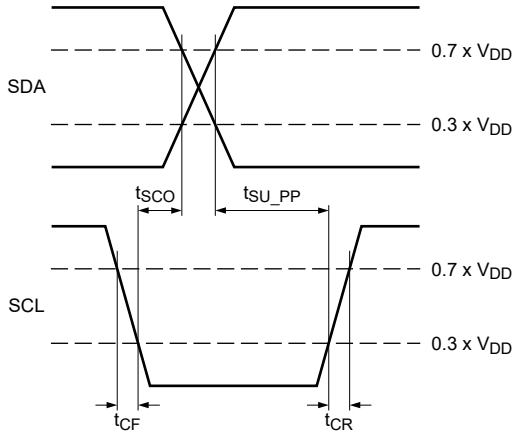

Figure 39. Target out timing

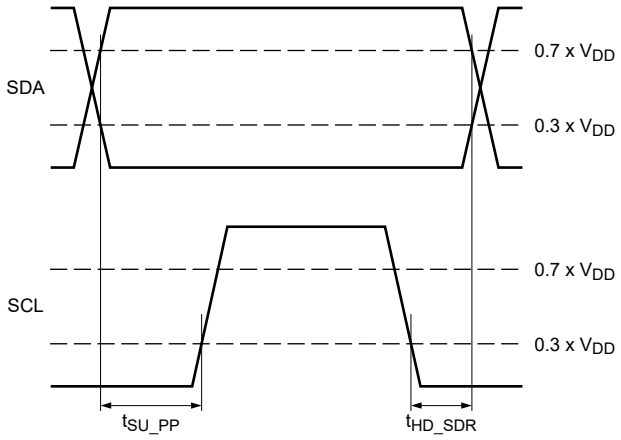

Figure 40. Controller SDR timing

All information provided in this document is subject to legal disclaimers.

© 2026 NXP B.V. All rights reserved.

Downloaded from Arrow.com.

4.12.7 CAN network AC electrical specifications

The Controller Area Network (CAN) module is a communication controller implementing the CAN protocol according to the CAN with Flexible Data rate (CAN FD) protocol and the CAN 2.0B protocol specification. The processor has two CAN modules available. Tx and Rx ports for both modules are multiplexed with other I/O pins. See the IOMUXC chapter of the reference manual to see which pins expose Tx and Rx pins; these ports are named CAN_TX and CAN_RX, respectively.

The DSE[5:0] = 001111 and FSEL1[1:0] = 11 are required drive settings to meet the timing.

Please see CAN network AC electrical specifications for timing parameters.

Table 60. CAN-FD electrical specifications

Parameters	FlexCAN (Classical and FD)	Unit
Maximum Baud Rate	8/8	Mbps
TXD Rise time wcs	4/4	ns
TXD Fall time wcs	4/4	ns
RXD Rise time wcs	4/4	ns
RXD Fall time wcs	4/4	ns
TXD	3.3/3.3	V
RXD	3.3/3.3	V
Internal delay wcs	100/50	ns
TX PAD delay wcs	25/25	ns
RX PAD delay wcs	10/10	ns
TX routing delay wcs	5/5	ns
RX routing delay wcs	5/5	ns
Transceiver loop delay wcs	250/250	ns
Total loop delay	395/345	ns

4.12.8 Pulse width modulator (PWM) timing parameters

This section describes the electrical information of the PWM. The PWM can be programmed to select one of three clock signals as its source frequency. The selected clock signal is passed through a prescaler before being input to the counter. The output is available at the pulse-width modulator output (PWMO) external pin.

Figure 41 depicts the timing of the PWM, and Table 61 lists the PWM timing parameters.

All information provided in this document is subject to legal disclaimers.

© 2026 NXP B.V. All rights reserved.

Downloaded from Arrow.com.

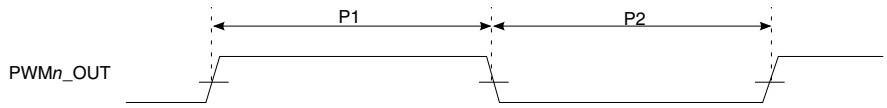

Figure 41. PWM timing

Table 61. PWM output timing parameters

ID	Parameter	Min	Max	Unit
	PWM Module Clock Frequency	0	66 (ipg_clk)	MHz
P1	PWM output pulse width high	12	—	ns
P2	PWM output pulse width low	12	—	ns

4.12.9 FlexSPI timing parameters

The FlexSPI interface can work in SDR or DDR modes. FlexSPI*n*_MCR0[RXCLKSRC] = 0 and FlexSPI*n*_MCR0[RXCLKSRC] = 1 configurations are supported when I/O is supplied by 3.3 V and 1.8 V, while FlexSPI*n*_MCR0[RXCLKSRC] = 3 configuration is supported when I/O is supplied by 1.8 Vonly.

Input timing assumes an input signal slew rate of 3 ns (20%/80%) and Output timing valid for maximum external load CL = 15 pF, which is assumed to be a 8 pF load at the end of a 50 ohm, un-terminated, 2-inch microstrip trace on standard FR4 (3.3 pF/inch). For best signal integrity, the series resistance of the transmission line should be matched closely to the selected RDSON of the I/O pad output driver.

The DSE[5:0] = 001111 and FSEL1[1:0] = 11 are required drive settings to meet the timing.

4.12.9.1 FlexSPI input/read timing

There are three sources for the internal sample clock of FlexSPI read data:

- Dummy read strobe generated by FlexSPI controller and looped back internally (FlexSPI*n*_MCR0[RXCLKSRC] = 0x0)
- Dummy read strobe generated by FlexSPI controller and looped back through the DQS pad (FlexSPI*n*_MCR0[RXCLKSRC] = 0x1)
- Read strobe provided by memory device and input from DQS pad (FlexSPI*n*_MCR0[RXCLKSRC] = 0x3)

The following sections describe input signal timing for each of these three internal sample clock sources.

4.12.9.1.1 SDR mode with FlexSPI*n*_MCR0[RXCLKSRC] = 0x0, 0x1

Table 62. FlexSPI input timing in SDR mode where FlexSPIn_MCR0[RXCLKSRC] = 0X0 (Nominal mode)

Symbol	Parameter	Min	Max	Unit
—	Frequency of operation[1]	—	66	MHz

Table continues on the next page...

All information provided in this document is subject to legal disclaimers.

© 2026 NXP B.V. All rights reserved.

Downloaded from Arrow.com.

Table 62. FlexSPI input timing in SDR mode where FlexSPIn_MCR0[RXCLKSRC] = 0X0 (Nominal mode)*...continued*

Symbol	Parameter	Min	Max	Unit
F1	Setup time for incoming data	6	—	ns
F2	Hold time for incoming data	0	—	ns

[1] The maximum frequency supported is 56 MHz when NVCC_xxx operating at 3.3 V.

Table 63. FlexSPI input timing in SDR mode where FlexSPI*n*_MCR0[RXCLKSRC] = 0X0 (Low drive mode)

Symbol	Parameter	Min	Max	Unit
—	Frequency of operation	—	50	MHz
F1	Setup time for incoming data	7	—	ns
F2	Hold time for incoming data	0	—	ns

Table 64. FlexSPI input timing in SDR mode where FlexSPI*n*_MCR0[RXCLKSRC] = 0X1 (Nominal mode) [1]

Symbol	Parameter	Min	Max	Unit
—	Frequency of operation[2]	—	166	MHz
F1	Setup time for incoming data	1	—	ns
F2	Hold time for incoming data	1	—	ns

[1] These timing specifications are valid only for 1.8 V nominal I/O pad supply voltage. For 3.3 V I/O supply, see Table 65
[2] The maximum frequency supported is 56 MHz when NVCC_xxx operating at 3.3 V.

Table 65. FlexSPI input timing in SDR mode where FlexSPI*n*_MCR0[RXCLKSRC] = 0X1 (Low drive mode)

Symbol	Parameter	Min	Max	Unit
—	Frequency of operation[1]	—	100	MHz
F1	Setup time for incoming data	2	—	ns
F2	Hold time for incoming data	1	—	ns

[1] he maximum frequency is 56 MHz at 3.3 V operation.

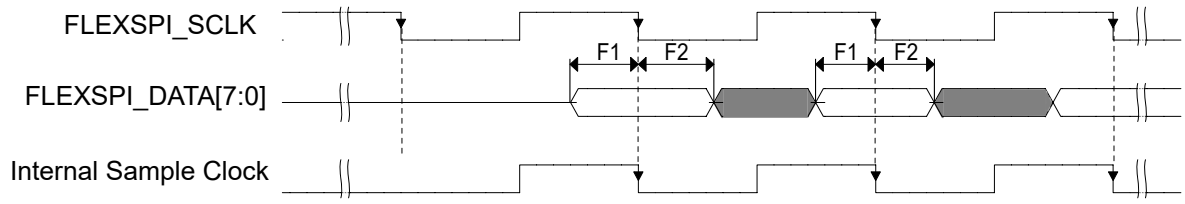

Figure 42. FlexSPI input timing in SDR mode where FlexSPIn_MCR0[RXCLKSRC] = 0X0, 0X1

Note:

Timing shown is based on the memory generating read data on the SCK falling edge, and FlexSPI controller sampling read data on the falling edge.

All information provided in this document is subject to legal disclaimers.

© 2026 NXP B.V. All rights reserved.

Downloaded from Arrow.com.

4.12.9.1.2 SDR mode with FlexSPI*n*_MCR0[RXCLKSRC] = 0x3

There are two cases when the memory provides both read data and the read strobe in SDR mode:

- A1—Memory generates both read data and read strobe on SCK rising edge (or falling edge)
- A2—Memory generates read data on SCK falling edge and generates read strobe on SCK rising edge

Note: *In this mode, it is only working under 1.8 V.*

Table 66. FlexSPI input timing in SDR mode where FlexSPI*n*_MCR0[RXCLKSRC] = 0x3 (case A1) (Nominal mode)

Symbol	Parameter	Min	Max	Unit
—	Frequency of operation	—	200	MHz
T_{SCKD} - T_{SCKDQS}	Time delta between T_{SCKD} and T_{SCKDQS}	-0.6	0.6	ns

Table 67. FlexSPI input timing in SDR mode where FlexSPI*n*_MCR0[RXCLKSRC] = 0x3 (case A1) (Low drive mode)

Symbol	Parameter	Min	Max	Unit
—	Frequency of operation	—	133	MHz
T_{SCKD} - T_{SCKDQS}	Time delta between T_{SCKD} and T_{SCKDQS}	-2	2	ns

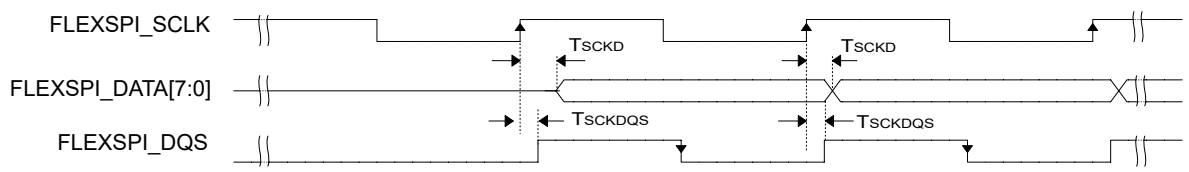

Figure 43. FlexSPI input timing in SDR mode where FlexSPIn_MCR0[RXCLKSRC] = 0X3 (case A1)

Note:

Timing shown is based on the memory generating read data and read strobe on the SCK rising edge. The FlexSPI controller samples read data on the DQS falling edge.

Table 68. FlexSPI input timing in SDR mode where FlexSPI*n*_MCR0[RXCLKSRC] = 0x3 (case A2) (Nominal mode)

Symbol	Parameter	Value		Unit
		Min	Max	
—	Frequency of operation	—	200	MHz
T_{SCKD} - T_{SCKDQS}	Time delta between T_{SCKD} and T_{SCKDQS}	-0.6	0.6	ns

All information provided in this document is subject to legal disclaimers.

© 2026 NXP B.V. All rights reserved.

Downloaded from Arrow.com.

Table 69. FlexSPI input timing in SDR mode where FlexSPI*n*_MCR0[RXCLKSRC] = 0x3 (case A2) (Low drive mode)

Symbol	Parameter	Value		Unit
		Min	Max	
—	Frequency of operation	—	133	MHz
T_{SCKD} - T_{SCKDQS}	Time delta between T_{SCKD} and T_{SCKDQS}	-2	2	ns

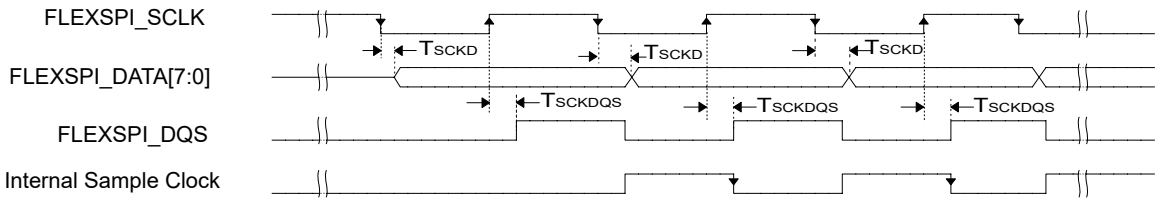

Figure 44. FlexSPI input timing in SDR mode where FlexSPIn_MCR0[RXCLKSRC] = 0X3 (case A2)

Note:

Timing shown is based on the memory generating read data on the SCK falling edge and read strobe on the SCK rising edge. The FlexSPI controller samples read data on a half cycle delayed DQS falling edge.

4.12.9.1.3 DDR mode with FlexSPI*n*_MCR0[RXCLKSRC] = 0x0, 0x1

Table 70. FlexSPI input timing in DDR mode where FlexSPI*n*_MCR0[RXCLKSRC] = 0x0 (Nominal and Low drive mode)

Symbol	Parameter	Min	Max	Unit
—	Frequency of operation	—	33	MHz
F1	Setup time for incoming data	6	—	ns
F2	Hold time for incoming data	0	—	ns

Table 71. FlexSPI input timing in DDR mode where FlexSPI*n*_MCR0[RXCLKSRC] = 0x1 (Nominal mode)[1]

Symbol	Parameter	Min	Max	Unit
—	Frequency of operation[2]	—	83	MHz
F1	Setup time for incoming data	1	—	ns
F2	Hold time for incoming data	1	—	ns

[1] These timing specifications are valid only for 1.8 V nominal I/O pad supply voltage. For 3.3 V I/O supply, see Table 72
[2] The maximum frequency supported is 56 MHz when NVCC_xxx operating at 3.3 V.

Table 72. FlexSPI input timing in DDR mode where FlexSPI*n*_MCR0[RXCLKSRC] = 0x1 (Low drive mode)

Symbol	Parameter	Min	Max	Unit
—	Frequency of operation[1]	—	66	MHz

Table continues on the next page...

All information provided in this document is subject to legal disclaimers.

© 2026 NXP B.V. All rights reserved.

Downloaded from Arrow.com.

Table 72. FlexSPI input timing in DDR mode where FlexSPI*n*_MCR0[RXCLKSRC] = 0x1 (Low drive mode)*...continued*

Symbol	Parameter	Min	Max	Unit
F1	Setup time for incoming data	1.5	—	ns
F2	Hold time for incoming data	1	—	ns

[1] The maximum frequency supported is 56 MHz when NVCC_xxx operating at 3.3 V.

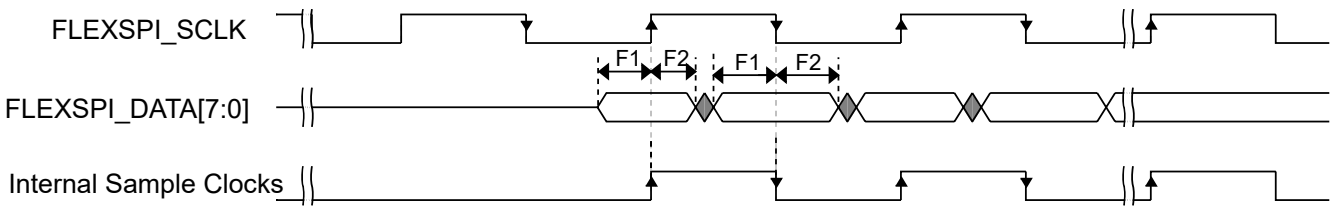

Figure 45. FlexSPI input timing in DDR mode where FlexSPIn_MCR0[RXCLKSRC] = 0x0, 0x1

4.12.9.1.4 DDR mode with FlexSPI*n*_MCR0[RXCLKSRC] = 0x3

Note: *In this mode, it is only working under 1.8 V.*

Table 73. FlexSPI input timing in DDR mode where FlexSPI*n*_MCR0[RXCLKSRC] = 0x3 (Nominal mode)

Symbol	Parameter	Min	Max	Unit
—	Frequency of operation	—	200	MHz
T_{SCKD} - T_{SCKDQS}	Time delta between T_{SCKD} and T_{SCKDQS}	-0.6	0.6	ns

Table 74. FlexSPI input timing in DDR mode where FlexSPI*n*_MCR0[RXCLKSRC] = 0x3 (Low drive mode)

Symbol	Parameter	Min	Max	Unit
—	Frequency of operation	—	133	MHz
T_{SCKD} - T_{SCKDQS}	Time delta between T_{SCKD} and T_{SCKDQS}	-0.9	0.9	ns

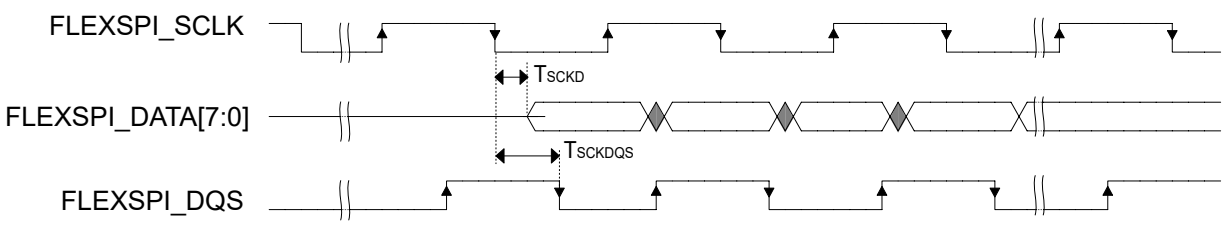

Figure 46. FlexSPI input timing in DDR mode where FlexSPIn_MCR0[RXCLKSRC] = 0x3

All information provided in this document is subject to legal disclaimers.

© 2026 NXP B.V. All rights reserved.

Downloaded from Arrow.com.

4.12.9.2 FlexSPI output/write timing

The following sections describe output signal timing for the FlexSPI controller including control signals and data outputs.

4.12.9.2.1 SDR mode

Table 75. FlexSPI output timing in SDR mode (Nominal mode) [1]

Symbol	Parameter	Min	Max	Unit
—	Frequency of operation[2]	—	200	MHz
T_{ck}	SCK clock period	5	—	ns
T_{DVO}	Output data valid time	—	0.6	ns
T_{DHO}	Output data hold time	-0.6	—	ns
T_{CSS}	Chip select output setup time	T_{CSS} + 0.5	—	SCLK
T_{CSH}	Chip select output hold time[3]	T_{CSH}	—	SCLK

[1] These timing specifications are valid only for 1.8 V nominal I/O pad supply voltage. For 3.3 V I/O supply, see Table 76
[2] The maximum frequency supported is 56 MHz when NVCC_xxx operating at 3.3 V.
[3] T_{CSS} and T_{CSH} are configured by the FlexSPI*n*_FLSHAxCR1 register. See i.MX 91 Applications Processor Reference Manual (IMX91RM) for more details.

Table 76. FlexSPI output timing in SDR mode (Low drive mode)

Symbol	Parameter	Min	Max	Unit
—	Frequency of operation [1]	—	133[2]	MHz
T_{ck}	SCK clock period	7.5	—	ns
T_{DVO}	Output data valid time	—	2	ns
T_{DHO}	Output data hold time	-2	—	ns
T_{CSS}	Chip select output setup time	T_{CSS} + 0.5	—	SCLK
T_{CSH}	Chip select output hold time[3]	T_{CSH}	—	SCLK

[1] The maximum frequency supported is 56 MHz when NVCC_xxx operating at 3.3 V.
[2] The actual maximum frequency supported is limited by the FlexSPI*n*_MCR0[RXCLKSRC] configuration used, see the FlexSPI SDR input timing specifications.
[3] T_{CSS} and T_{CSH} are configured by the FlexSPI*n*_FLSHAxCR1 register. See i.MX 91 Applications Processor Reference Manual (IMX91RM) for more details.

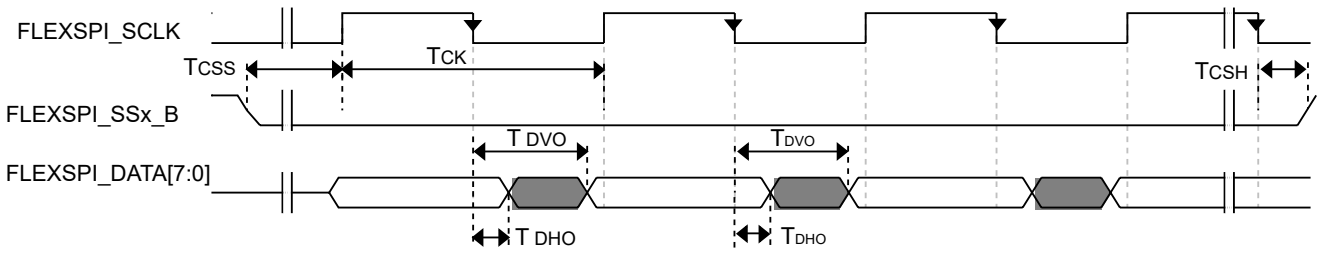

Figure 47. FlexSPI output timing in SDR mode

All information provided in this document is subject to legal disclaimers.

© 2026 NXP B.V. All rights reserved.

Downloaded from Arrow.com.

4.12.9.2.2 DDR mode

Table 77. FlexSPI output timing in DDR mode (Nominal mode)[1]

Symbol	Parameter	Min	Max	Unit
—	Frequency of operation[2]	—	200	MHz
T_{ck}	SCK clock period	5	—	ns
T_{DVO}	Output data valid time	—	0.6	ns
T_{DHO}	Output data hold time	-0.6	—	ns
T_{CSS}	Chip select output setup time	(T_{CSS} + 0.5) / 2	—	SCLK
T_{CSH}	Chip select output hold time[3]	(T_{CSH} + 0.5) / 2	—	SCLK

[1] These timing specifications are valid only for 1.8 V nominal IO pad supply voltage. For 3.3 V I/O supply, see Table 78
[2] The maximum frequency supported is 56 MHz when NVCC_xxx operating at 3.3 V.
[3] T_{CSS} and T_{CSH} are configured by the FlexSPI*n*_FLSHAxCR1 register. See i.MX 91 Applications Processor Reference Manual (IMX91RM) for more details.

Table 78. FlexSPI output timing in DDR mode (Low drive mode)

Symbol	Parameter	Min	Max	Unit
—	Frequency of operation[1]	—	133[2]	MHz
T_{ck}	SCK clock period	7.5	—	ns
T_{DVO}	Output data valid time	—	0.9	ns
T_{DHO}	Output data hold time	-0.9	—	ns
T_{CSS}	Chip select output setup time[3]	(T_{CSS} + 0.5) / 2	—	SCLK
T_{CSH}	Chip select output hold time[3]	(T_{CSH} + 0.5) / 2	—	SCLK

[1] The maximum frequency supported is 56 MHz when NVCC_xxx operating at 3.3 V.
[2] The actual maximum frequency supported is limited by the FlexSPI*n*_MCR0[RXCLKSRC] configuration used, see the FlexSPI DDR input timing specifications.
[3] T_{CSS} and T_{CSH} are configured by the FlexSPI*n*_FLSHAxCR1 register. See i.MX 91 Applications Processor Reference Manual (IMX91RM) for more details.

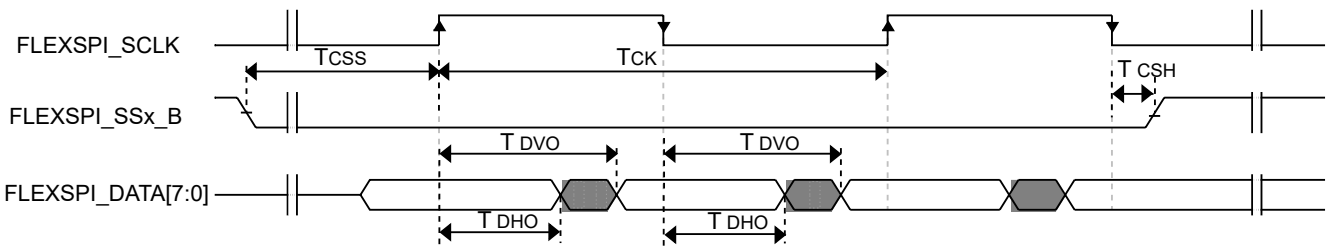

Figure 48. FlexSPI output timing in DDR mode

4.12.10 LPUART I/O configuration and timing parameters

See General purpose I/O (GPIO) AC parameters.

All information provided in this document is subject to legal disclaimers.

© 2026 NXP B.V. All rights reserved.

Downloaded from Arrow.com.

4.12.11 USB PHY parameters

The USB PHY parameters meet the electrical compliance requirements listed as following:

- *Universal Serial Bus Revision 2.0 Specification* (including ECNs and errata), On-The-Go and Embedded Host Supplement to the Universal Serial Bus Revision 2.0 Specification (including ECNs and errata)

4.12.11.1 Pad/Package/Board connections

The USBx_VBUS pin cannot directly connect to the 5 V VBUS voltage on the USB2.0 link.

Each USBx_VBUS pin must be isolated by an external 30 KΩ 1% precision resistor.

The USB 2.0 PHY uses USBx_TXRTUNE and an external resistor to calibrate the USBx_DP/DN 45 Ω source impedance. The external resistor value is 200 Ω 1% precision on each of USBx_TXRTUNE pad to ground.

5 Boot mode configuration

This section provides information on boot mode configuration pins allocation and boot devices interfaces allocation.

i.MX 91 supports three different boot modes:

- Normal Boot Mode
- Boot from Internal Fuse Mode
- Serial Download Boot Mode

Three different boot modes can be either selected via different boot mode pins or overridden by fuses.

i.MX 91 supports Single Boot: Cortex-A55 core is in charge of loading all containers and images.

For detailed boot mode configuration, see the see the i.MX 91 Fuse Map and the System Boot chapter in *i.MX 91 Reference Manual (IMX91RM)*.

5.1 Boot mode configuration pins

There are four boot mode pins used to select boot mode.

Table 79. Fuses and associated pins used for boot

BOOT_MODE[3:0]	Function
x000	Boot from Internal Fuses
0001	Serial Download (USB1)
0010	uSDHC1 8-bit eMMC 5.1
0011	uSDHC2 4-bit SD 3.0
0100	FlexSPI Serial NOR
0101	FlexSPI Serial NAND 2K
0110	Reserved
0111	Reserved
1000	Reserved

Table continues on the next page...

All information provided in this document is subject to legal disclaimers.

© 2026 NXP B.V. All rights reserved.

Downloaded from Arrow.com.

Table 79. Fuses and associated pins used for boot *...continued*

BOOT_MODE[3:0]	Function
1001	Reserved
1010	Reserved
1011	Reserved
1100	Reserved
1101	Reserved
1110	Reserved
1111	Reserved

- HW samples the boot CFG pins before ROM starts, these pins should be mapped to Boot CFG pins by default.
- Once HW samples the boot CFG pins and stores the boot CFG in CMC register, the register should be latched. That means the register value no longer changes and reflecting the pins status.

Additional boot options are also supported for both Normal Boot Mode and Internal Fuse mode:

- All boot modes supported for a range of speeds, timings, and protocol formats;
- eMMC and SD boot supported from any USDHC instance 1 or 2;
- Serial NOR boot supported for 1-bit, 4-bit, and 8-bit mode;
- Serial NAND boot supported for 1-bit, 4-bit, and 8-bit mode (8-bit Serial NAND)

BOOT_MODE pins are multiplexed over other functional pins. The functional IO that are multiplexed with these pins must be selected subject to two criteria:

- Functional IO must not be used if they are inputs to the SoC, which could potentially be constantly driven by external components. Such functional mode driving may interfere with the need for the board to pull these pins a certain way while POR is asserted.
- Functional IO must not be used if they are outputs of the SoC, which will be connected to components on the board that may misinterpret the signals as valid signals if they toggle (such as, the board drives them while POR is asserted).

5.2 Boot device interface allocation

i.MX 91 supports three kinds of boot devices:

- Primary Boot Device

  The primary boot device is selected by Boot Config pins if boot mode is the Normal Boot or Internal Fuses Boot. The valid primary boot device options are SD/eMMC/FlexSPI NOR/FlexSPI NAND. The valid options also depend on the Boot Type and other fuses configuration.

- Recovery Boot Device

  After booting from Primary Boot Device fails, i.MX 91 will try to boot from another boot source. The recovery boot device is only SPI1/2/3/4 for i.MX 91.

- Serial Download Boot Device

  Cortex-A55 supports serial download mode via USB1.

All information provided in this document is subject to legal disclaimers.

© 2026 NXP B.V. All rights reserved.

Downloaded from Arrow.com.

The following tables list the interfaces that can be used by the boot process in accordance with the specific boot mode configuration. The tables also describe the interface's specific modes and IOMUXC allocation, which are configured during boot when appropriate.

Table 80. Boot through FlexSPI

Signal name	PAD name	ALT
FlexSPIA_DATA0	SD3_DATA0	ALT1
FlexSPIA_DATA1	SD3_DATA1	ALT1
FlexSPIA_DATA2	SD3_DATA2	ALT1
FlexSPIA_DATA3	SD3_DATA3	ALT1
FlexSPIA_DQS	SD1_STROBE	ALT1
FlexSPIA_SS0_B	SD3_CMD	ALT1
FlexSPIA_SCLK	SD3_CLK	ALT1
FlexSPIA_DATA4	SD1_DATA4	ALT1
FlexSPIA_DATA5	SD1_DATA5	ALT1
FlexSPIA_DATA6	SD1_DATA6	ALT1
FlexSPIA_DATA7	SD1_DATA7	ALT1

Table 81. Boot through uSDHC1

Signal name	PAD name	ALT
USDHC1_CMD	SD1_CMD	ALT0
USDHC1_CLK	SD1_CLK	ALT0
USDHC1_DATA0	SD1_DATA0	ALT0
USDHC1_DATA1	SD1_DATA1	ALT0
USDHC1_DATA2	SD1_DATA2	ALT0
USDHC1_DATA3	SD1_DATA3	ALT0
USDHC1_DATA4	SD1_DATA4	ALT0
USDHC1_DATA5	SD1_DATA5	ALT0
USDHC1_DATA6	SD1_DATA6	ALT0
USDHC1_DATA7	SD1_DATA7	ALT0
USDHC1_RESET	SD1_DATA5	ALT2

All information provided in this document is subject to legal disclaimers.

© 2026 NXP B.V. All rights reserved.

Downloaded from Arrow.com.

Table 82. Boot through uSDHC2

Signal name	PAD name	ALT
USDHC2_CMD	SD2_CMD	ALT0
USDHC2_CLK	SD2_CLK	ALT0
USDHC2_DATA0	SD2_DATA0	ALT0
USDHC2_DATA1	SD2_DATA1	ALT0
USDHC2_DATA2	SD2_DATA2	ALT0
USDHC2_DATA3	SD2_DATA3	ALT0
USDHC2_RESET	SD2_RESET_B	ALT0
USDHC2_VSELECT	SD2_VSELECT	ALT0

Table 83. Boot through SPI1

Signal name	PAD name	ALT
SPI1_PCS1	PDM_BIT_STREAM0	ALT2
SPI1_SIN	SAI1_TXC	ALT2
SPI1_SOUT	SAI1_RXD0	ALT2
SPI1_SCK	SAI1_TXD0	ALT2
SPI1_PCS0	SAI1_TXFS	ALT2

Table 84. Boot through SPI2

Signal name	PAD name	ALT
SPI2_PCS1	PDM_BIT_STREAM1	ALT2
SPI2_SIN	UART1_RXD	ALT2
SPI2_SOUT	UART2_RXD	ALT2
SPI2_SCK	UART2_TXD	ALT2
SPI2_PCS0	UART1_TXD	ALT2

Table 85. Boot through SPI3

Signal name	PAD name	ALT
SPI3_PCS1	GPIO_IO07	ALT1

Table continues on the next page...

All information provided in this document is subject to legal disclaimers.

© 2026 NXP B.V. All rights reserved.

Downloaded from Arrow.com.

Table 85. Boot through SPI3*...continued*

SPI3_SIN	GPIO_IO09	ALT1
SPI3_SOUT	GPIO_IO10	ALT1
SPI3_SCK	GPIO_IO11	ALT1
SPI3_PCS0	GPIO_IO08	ALT1

Table 86. Boot through SPI4

Signal name	PAD name	ALT
SPI4_PCS1	GPIO_IO17	ALT5
SPI4_PCS2	GPIO_IO16	ALT5
SPI4_SIN	GPIO_IO19	ALT5
SPI4_SOUT	GPIO_IO20	ALT5
SPI4_SCK	GPIO_IO21	ALT5
SPI4_PCS0	GPIO_IO18	ALT5

USB1 interfaces are dedicated pins, thus no IOMUX options.

6 Package information and contact assignments

This section includes the contact assignment information and mechanical package drawing.

6.1 9 x 9 mm package information

6.1.1 9 x 9 mm, 0.5 mm pitch, ball matrix

Figure 49 shows the top, bottom, and side views of the 9 x 9 mm FCBGA package.

All information provided in this document is subject to legal disclaimers.

© 2026 NXP B.V. All rights reserved.

Downloaded from Arrow.com.

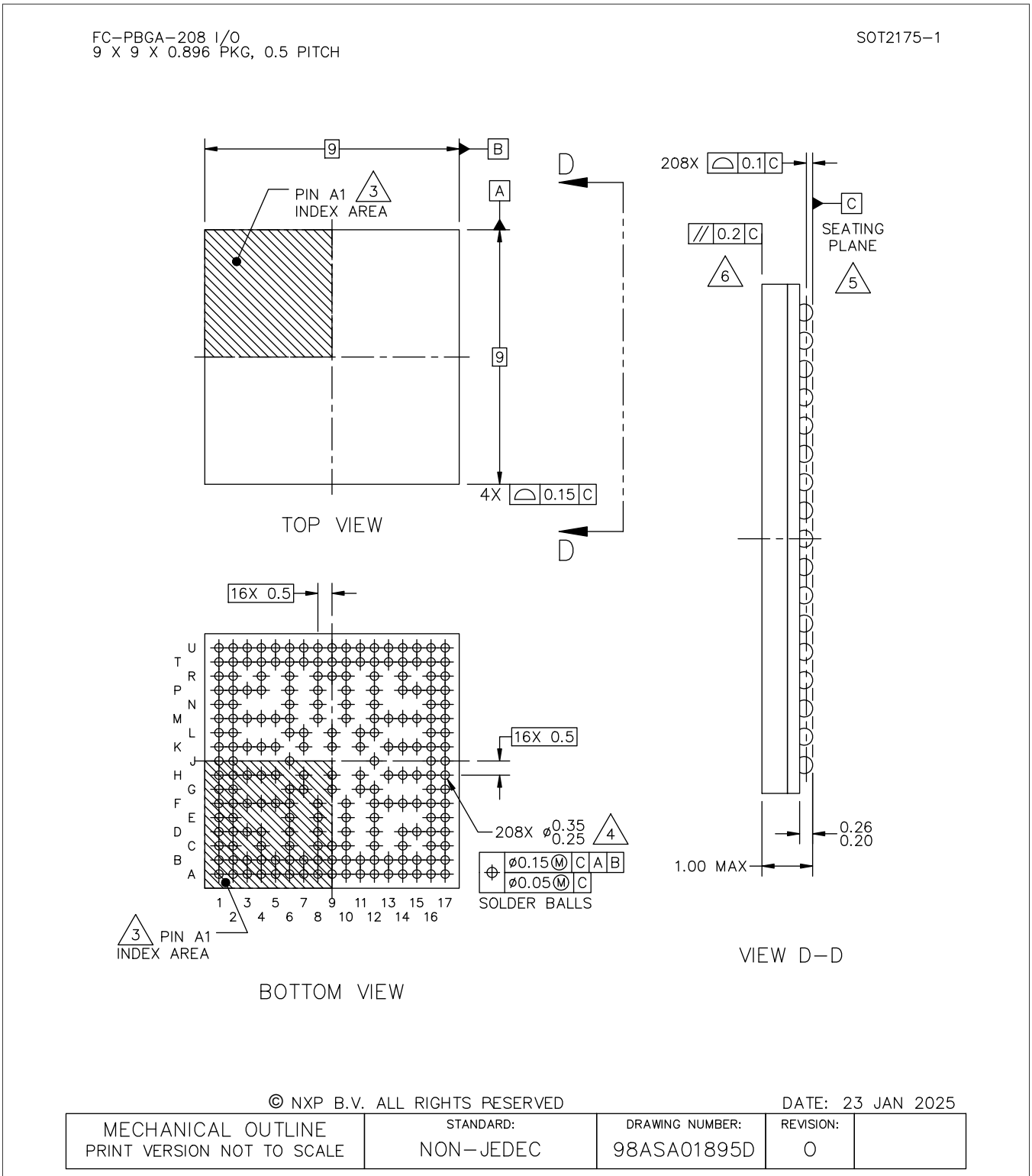

Figure 49. 9 x 9 mm FCBGA, case x package top, bottom, and side Views

6.1.2 9 x 9 mm supplies contact assignments and functional contact assignments

Table 87 shows the device connection list for ground, sense, and reference contact signals.

Downloaded from Arrow.com.

Table 87. 9 x 9 mm supplies contact assignment

Supply Rail Name	Ball(s) Position(s)	Remark
NVCC_AON	H13	—
NVCC_BBSM_1P8	E10	—
NVCC_GPIO	K13	—
NVCC_SD2	N12	—
NVCC_WAKEUP	L6, L9, L11	—
VDD_ANA0_0P8	F13	—
VDD_ANA0_1P8	F12	—
VDD_ANA1_0P8	M13	—
VDD_ANA1_1P8	N8	—
VDD_ANAVDET_1P8	L12	—
VDD_BBSM_0P8_CAP	C10	—
VDD_SOC	G7, G9, G11, H7, H11, K7, K11	—
VDD_USB_0P8	C4	—
VDD_USB_1P8	E6	—
VDD_USB_3P3	E8	—
VDD2_DDR	K5, M5, N6, P4, F5, H5	—
VSS	A1, A17, C6, C8, C12, C14, D3, D15, E12, F3, F6, F8, F10, F15, G6, G12, H3, H9, H15, J6, J12, K3, K9, L7, M3, M6, M8, M10, M12, M15, N10, P3, P15, R4, R6, R8, R10, R12, R14, U1, U17	—

Table 88 shows an alpha-sorted list of functional contact assignments of the 9 x 9 mm package.

Table 88. 9 x 9 mm functional contact assignment

Ball name	9 x 9 ball	Power group	Ball Types	Default setting		
				Default modes	Default function	Status while reset is asserted
ADC_IN0	B8	VDD_ANA0_1P8	ANALOG	—	—	Input without PU[1] / PD[2]

Table continues on the next page...

All information provided in this document is subject to legal disclaimers.

© 2026 NXP B.V. All rights reserved.

Downloaded from Arrow.com.

Table 88. 9 x 9 mm functional contact assignment *...continued*

Ball name	9 x 9 ball	Power group	Ball Types	Default setting		
				Default modes	Default function	Status while reset is asserted
ADC_IN1	A8	VDD_ANA0_1P8	ANALOG	—	—	Input without PU / PD
CCM_CLKO1	T4	NVCC_WAKEUP	GPIO	Alt0	CCMSRCGPCMIX.CLK01	Output low
CLKIN1	A6	VDD_ANA0_1P8	ANALOG	—	—	Input without PU / PD
CLKIN2	B6	VDD_ANA0_1P8	ANALOG	—	—	Input without PU / PD
DAP_TCLK_SWCLK	U3	NVCC_WAKEUP	GPIO	Alt0	DAP.TCLK_SWCLK	Input with PD
DAP_TDI	P8	NVCC_WAKEUP	GPIO	Alt0	DAP.TDI	Input with PU
DAP_TDO_TRACESWO	T3	NVCC_WAKEUP	GPIO	Alt0	DAP.TDO_TRACESWO	Input with PU/PD
DAP_TMS_SWDIO	P6	NVCC_WAKEUP	GPIO	Alt0	DAP.TMS_SWDIO	Input with PU
DRAM_CA0_A	F1	VDD2_DDR	DDR	—	—	—
DRAM_CA1_A	E2	VDD2_DDR	DDR	—	—	—
DRAM_CA2_A	D2	VDD2_DDR	DDR	—	—	—
DRAM_CA3_A	C1	VDD2_DDR	DDR	—	—	—
DRAM_CA4_A	B2	VDD2_DDR	DDR	—	—	—
DRAM_CA5_A	A2	VDD2_DDR	DDR	—	—	—
DRAM_CK_C_A	B1	VDD2_DDR	DDR	—	—	—
DRAM_CK_T_A	C2	VDD2_DDR	DDR	—	—	—
DRAM_CKE0_A	G1	VDD2_DDR	DDR	—	—	—
DRAM_CKE1_A	F2	VDD2_DDR	DDR	—	—	—
DRAM_CS0_A	D1	VDD2_DDR	DDR	—	—	—
DRAM_CS1_A	E1	VDD2_DDR	DDR	—	—	—
DRAM_DMI0_A	J2	VDD2_DDR	DDR	—	—	—

Table continues on the next page...

All information provided in this document is subject to legal disclaimers.

© 2026 NXP B.V. All rights reserved.

Downloaded from Arrow.com.

Table 88. 9 x 9 mm functional contact assignment *...continued*

Ball name	9 x 9 ball	Power group	Ball Types	Default setting		
				Default modes	Default function	Status while reset is asserted
DRAM_DMI1_A	R1	VDD2_DDR	DDR	—	—	—
DRAM_DQ00_A	L2	VDD2_DDR	DDR	—	—	—
DRAM_DQ01_A	L1	VDD2_DDR	DDR	—	—	—
DRAM_DQ02_A	K2	VDD2_DDR	DDR	—	—	—
DRAM_DQ03_A	K1	VDD2_DDR	DDR	—	—	—
DRAM_DQ04_A	J1	VDD2_DDR	DDR	—	—	—
DRAM_DQ05_A	H2	VDD2_DDR	DDR	—	—	—
DRAM_DQ06_A	H1	VDD2_DDR	DDR	—	—	—
DRAM_DQ07_A	G2	VDD2_DDR	DDR	—	—	—
DRAM_DQ08_A	T2	VDD2_DDR	DDR	—	—	—
DRAM_DQ09_A	U2	VDD2_DDR	DDR	—	—	—
DRAM_DQ10_A	T1	VDD2_DDR	DDR	—	—	—
DRAM_DQ11_A	R2	VDD2_DDR	DDR	—	—	—
DRAM_DQ12_A	N1	VDD2_DDR	DDR	—	—	—
DRAM_DQ13_A	N2	VDD2_DDR	DDR	—	—	—
DRAM_DQ14_A	M2	VDD2_DDR	DDR	—	—	—
DRAM_DQ15_A	M1	VDD2_DDR	DDR	—	—	—
DRAM_DQS0_C_A	K4	VDD2_DDR	—	—	—	—
DRAM_DQS0_T_A	M4	VDD2_DDR	DDR	—	—	—
DRAM_DQS1_C_A	P2	VDD2_DDR	—	—	—	—
DRAM_DQS1_T_A	P1	VDD2_DDR	DDR	—	—	—
DRAM_RESET_N	F4	VDD2_DDR	DDR	—	—	—
DRAM_ZQ	H4	VDD2_DDR	DDR	—	—	—

Table continues on the next page...

All information provided in this document is subject to legal disclaimers.

© 2026 NXP B.V. All rights reserved.

Downloaded from Arrow.com.

Table 88. 9 x 9 mm functional contact assignment *...continued*

Ball name	9 x 9 ball	Power group	Ball Types	Default setting		
				Default modes	Default function	Status while reset is asserted
ENET1_MDC	T8	NVCC_WAKEUP	GPIO	Alt5	GPIO4.IO[0]	Input with PD
ENET1_MDIO	U7	NVCC_WAKEUP	GPIO	Alt5	GPIO4.IO[1]	Input with PD
ENET1_RD0	U5	NVCC_WAKEUP	GPIO	Alt5	GPIO4.IO[10]	Input with PD
ENET1_RD1	T6	NVCC_WAKEUP	GPIO	Alt5	GPIO4.IO[11]	Input with PD
ENET1_RD2	U6	NVCC_WAKEUP	GPIO	Alt5	GPIO4.IO[12]	Input with PD
ENET1_RD3	T7	NVCC_WAKEUP	GPIO	Alt5	GPIO4.IO[13]	Input with PD
ENET1_RX_CTL	T5	NVCC_WAKEUP	GPIO	Alt5	GPIO4.IO[8]	Input with PD
ENET1_RXC	U4	NVCC_WAKEUP	GPIO	Alt5	GPIO4.IO[9]	Input with PD
ENET1_TD0	U9	NVCC_WAKEUP	GPIO	Alt5	GPIO4.IO[5]	Input with PD
ENET1_TD1	R9	NVCC_WAKEUP	GPIO	Alt5	GPIO4.IO[4]	Input with PD
ENET1_TD2	U10	NVCC_WAKEUP	GPIO	Alt5	GPIO4.IO[3]	Input with PD
ENET1_TD3	T10	NVCC_WAKEUP	GPIO	Alt5	GPIO4.IO[2]	Input with PD
ENET1_TX_CTL	T9	NVCC_WAKEUP	GPIO	Alt5	GPIO4.IO[6]	Input with PD
ENET1_TXC	U8	NVCC_WAKEUP	GPIO	Alt5	GPIO4.IO[7]	Input with PD
GPIO_IO00	B16	NVCC_GPIO	GPIO	Alt0	GPIO2.IO[0]	Input with PD
GPIO_IO01	B17	NVCC_GPIO	GPIO	Alt0	GPIO2.IO[1]	Input with PD
GPIO_IO02	C16	NVCC_GPIO	GPIO	Alt0	GPIO2.IO[2]	Input with PD
GPIO_IO03	C17	NVCC_GPIO	GPIO	Alt0	GPIO2.IO[3]	Input with PD
GPIO_IO04	D16	NVCC_GPIO	GPIO	Alt0	GPIO2.IO[4]	Input with PD
GPIO_IO05	D17	NVCC_GPIO	GPIO	Alt0	GPIO2.IO[5]	Input with PD
GPIO_IO06	E16	NVCC_GPIO	GPIO	Alt0	GPIO2.IO[6]	Input with PD
GPIO_IO07	E17	NVCC_GPIO	GPIO	Alt0	GPIO2.IO[7]	Input with PD
GPIO_IO08	K14	NVCC_GPIO	GPIO	Alt0	GPIO2.IO[8]	Input with PD

Table continues on the next page...

All information provided in this document is subject to legal disclaimers.

© 2026 NXP B.V. All rights reserved.

Downloaded from Arrow.com.

Table 88. 9 x 9 mm functional contact assignment *...continued*

Ball name	9 x 9 ball	Power group	Ball Types	Default setting		
				Default modes	Default function	Status while reset is asserted
GPIO_IO09	F16	NVCC_GPIO	GPIO	Alt0	GPIO2.IO[9]	Input with PD
GPIO_IO10	F17	NVCC_GPIO	GPIO	Alt0	GPIO2.IO[10]	Input with PD
GPIO_IO11	G16	NVCC_GPIO	GPIO	Alt0	GPIO2.IO[11]	Input with PD
GPIO_IO12	F14	NVCC_GPIO	GPIO	Alt0	GPIO2.IO[12]	Input with PD
GPIO_IO13	G17	NVCC_GPIO	GPIO	Alt0	GPIO2.IO[13]	Input with PD
GPIO_IO14	H16	NVCC_GPIO	GPIO	Alt0	GPIO2.IO[14]	Input with PD
GPIO_IO15	H17	NVCC_GPIO	GPIO	Alt0	GPIO2.IO[15]	Input with PD
GPIO_IO16	J16	NVCC_GPIO	GPIO	Alt0	GPIO2.IO[16]	Input with PD
GPIO_IO17	K15	NVCC_GPIO	GPIO	Alt0	GPIO2.IO[17]	Input with PD
GPIO_IO18	M14	NVCC_GPIO	GPIO	Alt0	GPIO2.IO[18]	Input with PD
GPIO_IO19	J17	NVCC_GPIO	GPIO	Alt0	GPIO2.IO[19]	Input with PD
GPIO_IO20	K16	NVCC_GPIO	GPIO	Alt0	GPIO2.IO[20]	Input with PD
GPIO_IO21	K17	NVCC_GPIO	GPIO	Alt0	GPIO2.IO[21]	Input with PD
I2C1_SCL	A12	NVCC_AON	GPIO	Alt5	GPIO1.IO[0]	Input with PD
I2C1_SDA	B12	NVCC_AON	GPIO	Alt5	GPIO1.IO[1]	Input with PD
I2C2_SCL	A11	NVCC_AON	GPIO	Alt5	GPIO1.IO[2]	Input with PD
I2C2_SDA	B11	NVCC_AON	GPIO	Alt5	GPIO1.IO[3]	Input with PD
ONOFF	D10	NVCC_BBSM_1P8	GPIO	Alt0	BBSMMIX.ONOFF	Input without PU / PD
PDM_BIT_STREAM0	A10	NVCC_AON	GPIO	Alt5	GPIO1.IO[9]	Input with PD
PDM_BIT_STREAM1	B10	NVCC_AON	GPIO	Alt5	GPIO1.IO[10]	Input with PD
PDM_CLK	A16	NVCC_AON	GPIO	Alt5	GPIO1.IO[8]	Input with PD
PMIC_ON_REQ	A7	NVCC_BBSM_1P8	GPIO	Alt0	BBSMMIX.PMIC_ON_REQ	Output high without PU / PD

Table continues on the next page...

All information provided in this document is subject to legal disclaimers.

© 2026 NXP B.V. All rights reserved.

Downloaded from Arrow.com.

Table 88. 9 x 9 mm functional contact assignment *...continued*

Ball name	9 x 9 ball	Power group	Ball Types	Default setting		
				Default modes	Default function	Status while reset is asserted
PMIC_STBY_REQ	C9	NVCC_BBSM_1P8	GPIO	Alt0	BBSMMIX.PMIC_STBY_REQ	Output low without PU / PD
POR_B	B7	NVCC_BBSM_1P8	GPIO	Alt0	BBSMMIX.POR_B	Input without PU / PD
RTC_XTALI	A5	NVCC_BBSM_1P8	ANALOG	Alt0	BBSMMIX.RTC	—
RTC_XTALO	B5	NVCC_BBSM_1P8	ANALOG	—	—	—
SAI1_RXD0	B14	NVCC_AON	GPIO	Alt5	GPIO1.IO[14]	Input with PD
SAI1_TXC	B15	NVCC_AON	GPIO	Alt5	GPIO1.IO[12]	Input with PD
SAI1_TXD0	A15	NVCC_AON	GPIO	Alt5	GPIO1.IO[13] CCMSRCGPCMIX.BOOT_MODE[3]	Input with PD
SAI1_TXFS	A14	NVCC_AON	GPIO	Alt5	GPIO1.IO[11] CCMSRCGPCMIX.BOOT_MODE[2]	Input with PD
SD1_CLK	U11	NVCC_WAKEUP	GPIO	Alt5	GPIO3.IO[8]	Input with PD
SD1_CMD	T11	NVCC_WAKEUP	GPIO	Alt5	GPIO3.IO[9]	Input with PD
SD1_DATA0	T13	NVCC_WAKEUP	GPIO	Alt5	GPIO3.IO[10]	Input with PD
SD1_DATA1	T14	NVCC_WAKEUP	GPIO	Alt5	GPIO3.IO[11]	Input with PD
SD1_DATA2	T15	NVCC_WAKEUP	GPIO	Alt5	GPIO3.IO[12]	Input with PD
SD1_DATA3	U13	NVCC_WAKEUP	GPIO	Alt5	GPIO3.IO[13]	Input with PD
SD1_DATA4	T12	NVCC_WAKEUP	GPIO	Alt5	GPIO3.IO[14]	Input with PD
SD1_DATA5	U14	NVCC_WAKEUP	GPIO	Alt5	GPIO3.IO[15]	Input with PD
SD1_DATA6	U15	NVCC_WAKEUP	GPIO	Alt5	GPIO3.IO[16]	Input with PD
SD1_DATA7	U16	NVCC_WAKEUP	GPIO	Alt5	GPIO3.IO[17]	Input with PD
SD1_STROBE	U12	NVCC_WAKEUP	GPIO	Alt5	GPIO3.IO[18]	Input without PU / PD

Table continues on the next page...

All information provided in this document is subject to legal disclaimers.

© 2026 NXP B.V. All rights reserved.

Downloaded from Arrow.com.

Table 88. 9 x 9 mm functional contact assignment *...continued*

Ball name	9 x 9 ball	Power group	Ball Types	Default setting		
				Default modes	Default function	Status while reset is asserted
SD2_CD_B	P12	NVCC_SD2	GPIO	Alt5	GPIO3.IO[0]	Input with PD
SD2_CLK	M16	NVCC_SD2	GPIO	Alt5	GPIO3.IO[1]	Input with PD
SD2_CMD	M17	NVCC_SD2	GPIO	Alt5	GPIO3.IO[2]	Input with PD
SD2_DATA0	N17	NVCC_SD2	GPIO	Alt5	GPIO3.IO[3]	Input with PD
SD2_DATA1	N16	NVCC_SD2	GPIO	Alt5	GPIO3.IO[4]	Input with PD
SD2_DATA2	L17	NVCC_SD2	GPIO	Alt5	GPIO3.IO[5]	Input with PD
SD2_DATA3	L16	NVCC_SD2	GPIO	Alt5	GPIO3.IO[6]	Input with PD
SD2_RESET_B	P10	NVCC_SD2	GPIO	Alt5	GPIO3.IO[7]	Input with PD
SD2_VSELECT	P14	NVCC_WAKEUP	GPIO	Alt5	GPIO3.IO[19]	Input with PD
SD3_CLK	T16	NVCC_WAKEUP	GPIO	Alt5	GPIO3.IO[20]	Input with PD
SD3_CMD	T17	NVCC_WAKEUP	GPIO	Alt5	GPIO3.IO[21]	Input with PD
SD3_DATA0	R16	NVCC_WAKEUP	GPIO	Alt5	GPIO3.IO[22]	Input with PD
SD3_DATA1	R17	NVCC_WAKEUP	GPIO	Alt5	GPIO3.IO[23]	Input with PD
SD3_DATA2	P16	NVCC_WAKEUP	GPIO	Alt5	GPIO3.IO[24]	Input with PD
SD3_DATA3	P17	NVCC_WAKEUP	GPIO	Alt5	GPIO3.IO[25]	Input with PD
TAMPER0	D6	NVCC_BBSM_1P8	GPIO	Alt0	BBSMMIX.TAMPER0	Input with PU
TAMPER1	D8	NVCC_BBSM_1P8	GPIO	Alt0	BBSMMIX.TAMPER1	Input with PU
UART1_RXD	B13	NVCC_AON	GPIO	Alt5	GPIO1.IO[4]	Input with PD
UART1_TXD	A13	NVCC_AON	GPIO	Alt5	GPIO1.IO[5] CCMSRCGPCMIX.BOOT_MODE[0]	Input with PD
UART2_RXD	D14	NVCC_AON	GPIO	Alt5	GPIO1.IO[6]	Input with PD
UART2_TXD	D12	NVCC_AON	GPIO	Alt5	GPIO1.IO[7] CCMSRCGPCMIX.BOOT_MODE[1]	Input with PD

Table continues on the next page...

All information provided in this document is subject to legal disclaimers.

© 2026 NXP B.V. All rights reserved.

Downloaded from Arrow.com.

Table 88. 9 x 9 mm functional contact assignment *...continued*

Ball name	9 x 9 ball	Power group	Ball Types	Default setting		
				Default modes	Default function	Status while reset is asserted
USB1_D_N	A4	VDD_USB_3P3	PHY	—	—	—
USB1_D_P	B4	VDD_USB_3P3	PHY	—	—	—
USB1_ID	D4	VDD_USB_1P8	PHY	—	—	—
USB1_TXRTUNE	A3	VDD_USB_1P8	PHY	—	—	—
USB1_VBUS	B3	VDD_USB_3P3	PHY	—	—	—
WDOG_ANY	H14	NVCC_AON	GPIO	Alt5	WDOG1.WDOG_ANY	Input with PU
XTALI_24M	A9	VDD_ANA0_1P8	ANALOG	—	—	—
XTALO_24M	B9	VDD_ANA0_1P8	ANALOG	—	—	—

[1] Pull-up
[2] Pull-down

6.1.3 9 x 9 mm, 0.5 mm pitch, ball map

Table 89 shows the 9 x 9 mm, 0.5 mm pitch ball map for the i.MX 91.

All information provided in this document is subject to legal disclaimers.

© 2026 NXP B.V. All rights reserved.

Downloaded from Arrow.com.

Table 89. 9 x 9 mm, 0.5 mm pitch, ball map

	1	2	3	4	5	6	7	8	9	10	11	12	13	14	15	16	17
A	VSS	DRAM_CA5_A	USB1_TXRTUNE	USB1_D_N	RTC_XTALI	CLKIN1	PMIC_ON_REQ	ADC_IN1	XTALI_24M	PDM_BIT_STREAM0	I2C2_SCL	I2C1_SCL	UART1_TXD	SAI1_TXFS	SAI1_TXD0	PDM_CLK	VSS
B	DRAM_CK_C_A	DRAM_CA4_A	USB1_VBUS	USB1_D_P	RTC_XTALO	CLKIN2	POR_B	ADC_IN0	XTALO_24M	PDM_BIT_STREAM1	I2C2_SDA	I2C1_SDA	UART1_RXD	SAI1_RXD0	SAI1_TXC	GPIO_IO00	GPIO_IO01
C	DRAM_CA3_A	DRAM_CK_T_A		VDD_USB_0P8		VSS		VSS	PMIC_STBY_REQ	VDD_BBSM_0P8_CAP		VSS		VSS		GPIO_IO02	GPIO_IO03
D	DRAM_CS0_A	DRAM_CA2_A	VSS	USB1_ID		TAMPER0		TAMPER1		ONOFF		UART2_TXD		UART2_RXD	VSS	GPIO_IO04	GPIO_IO05
E	DRAM_CS1_A	DRAM_CA1_A				VDD_USB_1P8		VDD_USB_3P3		NVCC_BBSM_1P8		VSS				GPIO_IO06	GPIO_IO07
F	DRAM_CA0_A	DRAM_CKE1_A	VSS	DRAM_RESET_N	VDD2_DDR	VSS		VSS		VSS		VDD_ANA0_1P8	VDD_ANA0_0P8	GPIO_IO12	VSS	GPIO_IO09	GPIO_IO10
G	DRAM_CKE0_A	DRAM_DQ07_A				VSS	VDD_SOC		VDD_SOC		VDD_SOC	VSS				GPIO_IO11	GPIO_IO13
H	DRAM_DQ06_A	DRAM_DQ05_A	VSS	DRAM_ZQ	VDD2_DDR		VDD_SOC		VSS		VDD_SOC		NVCC_AON	WDOG_ANY	VSS	GPIO_IO14	GPIO_IO15

Table continues on the next page...

All information provided in this document is subject to legal disclaimers.

© 2026 NXP B.V. All rights reserved.

Downloaded from Arrow.com.

Table 89. 9 x 9 mm, 0.5 mm pitch, ball map*...continued*

	1	2	3	4	5	6	7	8	9	10	11	12	13	14	15	16	17
J	DRAM_DQ04_A	DRAM_DMI0_A				VSS						VSS				GPIO_IO16	GPIO_IO19
K	DRAM_DQ03_A	DRAM_DQ02_A	VSS	DRAM_DQS0_C_A	VDD2_DDR		VDD_SOC		VSS		VDD_SOC		NVCC_GPIO	GPIO_IO08	GPIO_IO17	GPIO_IO20	GPIO_IO21
L	DRAM_DQ01_A	DRAM_DQ00_A				NVCC_WAKEUP	VSS		NVCC_WAKEUP		NVCC_WAKEUP	VDD_ANAVDET_1P8				SD2_DATA3	SD2_DATA2
M	DRAM_DQ15_A	DRAM_DQ14_A	VSS	DRAM_DQS0_T_A	VDD2_DDR	VSS		VSS		VSS		VSS	VDD_ANA1_0P8	GPIO_IO18	VSS	SD2_CLK	SD2_CMD
N	DRAM_DQ12_A	DRAM_DQ13_A				VDD2_DDR		VDD_ANA1_1P8		VSS		NVCC_SD2				SD2_DATA1	SD2_DATA0
P	DRAM_DQS1_T_A	DRAM_DQS1_C_A	VSS	VDD2_DDR		DAP_TMS_SWDIO		DAP_TDI		SD2_RESET_B		SD2_CD_B		SD2_VSELECT	VSS	SD3_DATA2	SD3_DATA3
R	DRAM_DMI1_A	DRAM_DQ11_A		VSS		VSS		VSS	ENET1_TD1	VSS		VSS		VSS		SD3_DATA0	SD3_DATA1
T	DRAM_DQ10_A	DRAM_DQ08_A	DAP_TDO_TRACESWO	CCM_CLKO1	ENET1_RX_CTL	ENET1_RD1	ENET1_RD3	ENET1_MDC	ENET1_TX_CTL	ENET1_TD3	SD1_CMD	SD1_DATA4	SD1_DATA0	SD1_DATA1	SD1_DATA2	SD3_CLK	SD3_CMD

Table continues on the next page...

All information provided in this document is subject to legal disclaimers.

© 2026 NXP B.V. All rights reserved.

Downloaded from Arrow.com.

Table 89. 9 x 9 mm, 0.5 mm pitch, ball map*...continued*

	1	2	3	4	5	6	7	8	9	10	11	12	13	14	15	16	17
U	VSS	DRAM_DQ09_A	DAP_TCLK_SWCLK	ENET1_RXC	ENET1_RD0	ENET1_RD2	ENET1_MDIO	ENET1_TXC	ENET1_TD0	ENET1_TD2	SD1_CLK	SD1_STROBE	SD1_DATA3	SD1_DATA5	SD1_DATA6	SD1_DATA7	VSS
	1	**2**	**3**	**4**	**5**	**6**	**7**	**8**	**9**	**10**	**11**	**12**	**13**	**14**	**15**	**16**	**17**

All information provided in this document is subject to legal disclaimers.

© 2026 NXP B.V. All rights reserved.

Downloaded from Arrow.com.

6.2 11 x 11 mm package information

6.2.1 11 x 11 mm, 0.5 mm pitch, ball matrix

Figure 50 shows the top, bottom, and side views of the 11 x 11 mm FCBGA package.

All information provided in this document is subject to legal disclaimers.

© 2026 NXP B.V. All rights reserved.

Downloaded from Arrow.com.

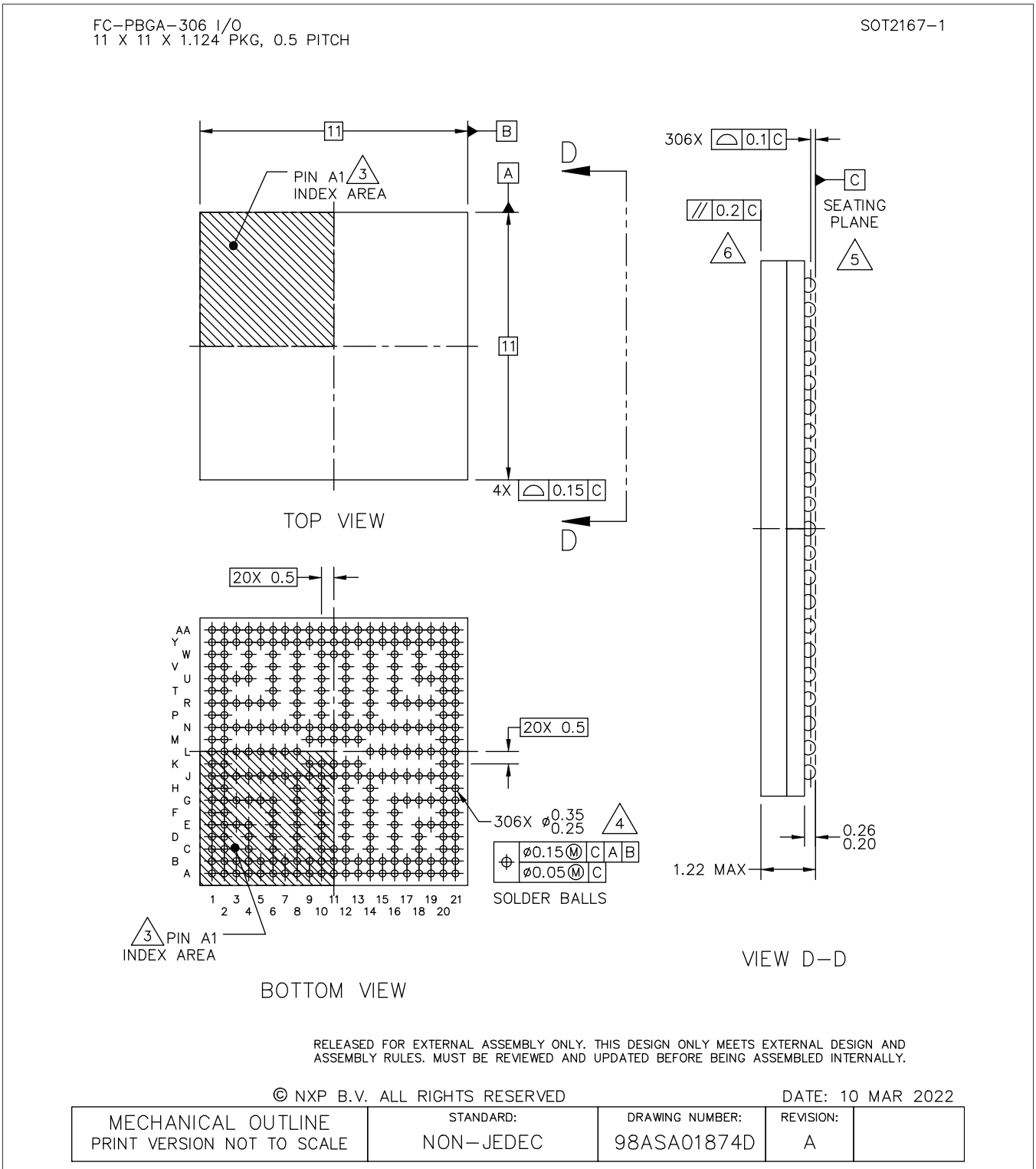

Figure 50. 11 x 11 mm FCBGA, case x package top, bottom, and side Views

6.2.2 11 x 11 mm supplies contact assignments and functional contact assignments

Table 90 shows the device connection list for ground, sense, and reference contact signals.

© 2026 NXP B.V. All rights reserved.

Downloaded from Arrow.com.

Table 90. 11 x 11 mm supplies contact assignment

Supply Rail Name	Ball(s) Position(s)	Remark
NVCC_AON	L16	—
NVCC_BBSM_1P8	G12	—
NVCC_GPIO	N15, N16	—
NVCC_SD2	R16	—
NVCC_WAKEUP	R10, R12, W8	—
VDD_ANA_0P8	J15, J16, R14	—
VDD_ANA0_1P8	F16, G16	—
VDD_ANA1_1P8	R8	—
VDD_ANAVDET_1P8	L15	—
VDD_BBSM_0P8_CAP	G14	—
VDD_SOC	J9, J10, J11, J12, J13, K9, K10, K12, K13, M9, M10, M12, M13, N9, N10, N11, N12, N13	—
VDD_USB_0P8	F10	—
VDD_USB_1P8	E8	—
VDD_USB_3P3	G10	—
VDD2_DDR	L7, N6, N7, R6, T6, G6, J6, J7, L6	—
VSS	A1, A21, C2, C4, C6, C8, C10, C12, C14, C16, C18, E3, E19, G3, G19, H8, H10, H12, H14, J3, J5, J8, J14, J19, K11, L1, L3, L5, L8, L14, L19, M11, N3, N5, N8, N14, N19, P8, P10, P12, P14, R3, R19, T1, U3, U19, W4, W6, W10, W12, W14, W16, W18, AA1, AA21	—

Table 91 shows an alpha-sorted list of functional contact assignments of the 11 x 11 mm package.

Table 91. 11 x 11 mm functional contact assignment

Ball name	11 x 11 ball	Power group	Ball Types	Default setting		
				Default modes	Default function	Status while reset is asserted
ADC_IN0	B19	VDD_ANA0_1P8	ANALOG	—	—	Input without PU[1] / PD[2]

Table continues on the next page...

All information provided in this document is subject to legal disclaimers.

© 2026 NXP B.V. All rights reserved.

Downloaded from Arrow.com.

Table 91. 11 x 11 mm functional contact assignment *...continued*

Ball name	11 x 11 ball	Power group	Ball Types	Default setting		
				Default modes	Default function	Status while reset is asserted
ADC_IN1	A20	VDD_ANA0_1P8	ANALOG	—	—	Input without PU / PD
ADC_IN2	B20	VDD_ANA0_1P8	ANALOG	—	—	Input without PU / PD
ADC_IN3	B21	VDD_ANA0_1P8	ANALOG	—	—	Input without PU / PD
CCM_CLKO1	AA2	NVCC_WAKEUP	GPIO	Alt0	CCMSRCGPCMIX.CLK01	Input with PU
CCM_CLKO2	Y3	NVCC_WAKEUP	GPIO	Alt0	CCMSRCGPCMIX.CLK02	Input with PU
CCM_CLKO3	U4	NVCC_WAKEUP	GPIO	Alt5	GPIO4.IO[28]	Input with PU
CCM_CLKO4	V4	NVCC_WAKEUP	GPIO	Alt5	GPIO4.IO[29]	Input with PU
CLKIN1	B17	VDD_ANA0_1P8	ANALOG	—	—	Input without PU / PD
CLKIN2	A18	VDD_ANA0_1P8	ANALOG	—	—	Input without PU / PD
DAP_TCLK_SWCLK	Y1	NVCC_WAKEUP	GPIO	Alt0	DAP.TCLK_SWCLK	Input with PD
DAP_TDI	W1	NVCC_WAKEUP	GPIO	Alt0	DAP.TDI	Input with PU
DAP_TDO_TRACESWO	Y2	NVCC_WAKEUP	GPIO	Alt0	DAP.TDO_TRACESWO	Input with PD
DAP_TMS_SWDIO	W2	NVCC_WAKEUP	GPIO	Alt0	DAP.TMS_SWDIO	Input with PU
DRAM_CA0_A	H2	VDD2_DDR	DDR	—	—	—
DRAM_CA1_A	G1	VDD2_DDR	DDR	—	—	—
DRAM_CA2_A	F2	VDD2_DDR	DDR	—	—	—
DRAM_CA3_A	E1	VDD2_DDR	DDR	—	—	—
DRAM_CA4_A	E2	VDD2_DDR	DDR	—	—	—
DRAM_CA5_A	D1	VDD2_DDR	DDR	—	—	—
DRAM_CK_C_A	G5	VDD2_DDR	DDR	—	—	—

Table continues on the next page...

All information provided in this document is subject to legal disclaimers.

© 2026 NXP B.V. All rights reserved.

Downloaded from Arrow.com.

Table 91. 11 x 11 mm functional contact assignment *...continued*

Ball name	11 x 11 ball	Power group	Ball Types	Default setting		
				Default modes	Default function	Status while reset is asserted
DRAM_CK_T_A	G4	VDD2_DDR	DDR	—	—	—
DRAM_CKE0_A	H1	VDD2_DDR	DDR	—	—	—
DRAM_CKE1_A	J4	VDD2_DDR	DDR	—	—	—
DRAM_CS0_A	F1	VDD2_DDR	DDR	—	—	—
DRAM_CS1_A	G2	VDD2_DDR	DDR	—	—	—
DRAM_DMI0_A	L2	VDD2_DDR	DDR	—	—	—
DRAM_DMI1_A	T2	VDD2_DDR	DDR	—	—	—
DRAM_DQ00_A	N1	VDD2_DDR	DDR	—	—	—
DRAM_DQ01_A	N2	VDD2_DDR	DDR	—	—	—
DRAM_DQ02_A	M1	VDD2_DDR	DDR	—	—	—
DRAM_DQ03_A	M2	VDD2_DDR	DDR	—	—	—
DRAM_DQ04_A	K1	VDD2_DDR	DDR	—	—	—
DRAM_DQ05_A	K2	VDD2_DDR	DDR	—	—	—
DRAM_DQ06_A	J1	VDD2_DDR	DDR	—	—	—
DRAM_DQ07_A	J2	VDD2_DDR	DDR	—	—	—
DRAM_DQ08_A	V1	VDD2_DDR	DDR	—	—	—
DRAM_DQ09_A	V2	VDD2_DDR	DDR	—	—	—
DRAM_DQ10_A	U2	VDD2_DDR	DDR	—	—	—
DRAM_DQ11_A	U1	VDD2_DDR	DDR	—	—	—
DRAM_DQ12_A	R1	VDD2_DDR	DDR	—	—	—
DRAM_DQ13_A	R2	VDD2_DDR	DDR	—	—	—
DRAM_DQ14_A	P2	VDD2_DDR	DDR	—	—	—
DRAM_DQ15_A	P1	VDD2_DDR	DDR	—	—	—

Table continues on the next page...

All information provided in this document is subject to legal disclaimers.

© 2026 NXP B.V. All rights reserved.

Downloaded from Arrow.com.

Table 91. 11 x 11 mm functional contact assignment *...continued*

Ball name	11 x 11 ball	Power group	Ball Types	Default setting		
				Default modes	Default function	Status while reset is asserted
DRAM_DQS0_C_A	L4	VDD2_DDR	—	—	—	—
DRAM_DQS0_T_A	N4	VDD2_DDR	DDR	—	—	—
DRAM_DQS1_C_A	R5	VDD2_DDR	—	—	—	—
DRAM_DQS1_T_A	R4	VDD2_DDR	DDR	—	—	—
DRAM_MTEST1	D4	VDD2_DDR	DDR	—	—	—
DRAM_RESET_N	D2	VDD2_DDR	DDR	—	—	—
DRAM_ZQ	E4	VDD2_DDR	DDR	—	—	—
ENET1_MDC	AA11	NVCC_WAKEUP	GPIO	Alt5	GPIO4.IO[0]	Input with PD
ENET1_MDIO	AA10	NVCC_WAKEUP	GPIO	Alt5	GPIO4.IO[1]	Input with PD
ENET1_RD0	AA8	NVCC_WAKEUP	GPIO	Alt5	GPIO4.IO[10]	Input with PD
ENET1_RD1	Y9	NVCC_WAKEUP	GPIO	Alt5	GPIO4.IO[11]	Input with PD
ENET1_RD2	AA9	NVCC_WAKEUP	GPIO	Alt5	GPIO4.IO[12]	Input with PD
ENET1_RD3	Y10	NVCC_WAKEUP	GPIO	Alt5	GPIO4.IO[13]	Input with PD
ENET1_RX_CTL	Y8	NVCC_WAKEUP	GPIO	Alt5	GPIO4.IO[8]	Input with PD
ENET1_RXC	AA7	NVCC_WAKEUP	GPIO	Alt5	GPIO4.IO[9]	Input with PD
ENET1_TD0	W11	NVCC_WAKEUP	GPIO	Alt5	GPIO4.IO[5]	Input with PD
ENET1_TD1	T12	NVCC_WAKEUP	GPIO	Alt5	GPIO4.IO[4]	Input with PD
ENET1_TD2	U12	NVCC_WAKEUP	GPIO	Alt5	GPIO4.IO[3]	Input with PD
ENET1_TD3	V12	NVCC_WAKEUP	GPIO	Alt5	GPIO4.IO[2]	Input with PD
ENET1_TX_CTL	V10	NVCC_WAKEUP	GPIO	Alt5	GPIO4.IO[6]	Input with PD
ENET1_TXC	U10	NVCC_WAKEUP	GPIO	Alt5	GPIO4.IO[7]	Input with PD
ENET2_MDC	Y7	NVCC_WAKEUP	GPIO	Alt5	GPIO4.IO[14]	Input with PD
ENET2_MDIO	AA6	NVCC_WAKEUP	GPIO	Alt5	GPIO4.IO[15]	Input with PD

Table continues on the next page...

All information provided in this document is subject to legal disclaimers.

© 2026 NXP B.V. All rights reserved.

Downloaded from Arrow.com.

Table 91. 11 x 11 mm functional contact assignment *...continued*

Ball name	11 x 11 ball	Power group	Ball Types	Default setting		
				Default modes	Default function	Status while reset is asserted
ENET2_RD0	AA4	NVCC_WAKEUP	GPIO	Alt5	GPIO4.IO[24]	Input with PD
ENET2_RD1	Y5	NVCC_WAKEUP	GPIO	Alt5	GPIO4.IO[25]	Input with PD
ENET2_RD2	AA5	NVCC_WAKEUP	GPIO	Alt5	GPIO4.IO[26]	Input with PD
ENET2_RD3	Y6	NVCC_WAKEUP	GPIO	Alt5	GPIO4.IO[27]	Input with PD
ENET2_RX_CTL	Y4	NVCC_WAKEUP	GPIO	Alt5	GPIO4.IO[22]	Input with PD
ENET2_RXC	AA3	NVCC_WAKEUP	GPIO	Alt5	GPIO4.IO[23]	Input with PD
ENET2_TD0	T8	NVCC_WAKEUP	GPIO	Alt5	GPIO4.IO[19]	Input with PD
ENET2_TD1	U8	NVCC_WAKEUP	GPIO	Alt5	GPIO4.IO[18]	Input with PD
ENET2_TD2	V8	NVCC_WAKEUP	GPIO	Alt5	GPIO4.IO[17]	Input with PD
ENET2_TD3	T10	NVCC_WAKEUP	GPIO	Alt5	GPIO4.IO[16]	Input with PD
ENET2_TX_CTL	V6	NVCC_WAKEUP	GPIO	Alt5	GPIO4.IO[20]	Input with PD
ENET2_TXC	U6	NVCC_WAKEUP	GPIO	Alt5	GPIO4.IO[21]	Input with PD
GPIO_IO00	J21	NVCC_GPIO	GPIO	Alt0	GPIO2.IO[0]	Input with PD
GPIO_IO01	J20	NVCC_GPIO	GPIO	Alt0	GPIO2.IO[1]	Input with PD
GPIO_IO02	K20	NVCC_GPIO	GPIO	Alt0	GPIO2.IO[2]	Input with PD
GPIO_IO03	K21	NVCC_GPIO	GPIO	Alt0	GPIO2.IO[3]	Input with PD
GPIO_IO04	L17	NVCC_GPIO	GPIO	Alt0	GPIO2.IO[4]	Input with PD
GPIO_IO05	L18	NVCC_GPIO	GPIO	Alt0	GPIO2.IO[5]	Input with PD
GPIO_IO06	L20	NVCC_GPIO	GPIO	Alt0	GPIO2.IO[6]	Input with PD
GPIO_IO07	L21	NVCC_GPIO	GPIO	Alt0	GPIO2.IO[7]	Input with PD
GPIO_IO08	M20	NVCC_GPIO	GPIO	Alt0	GPIO2.IO[8]	Input with PD
GPIO_IO09	M21	NVCC_GPIO	GPIO	Alt0	GPIO2.IO[9]	Input with PD
GPIO_IO10	N17	NVCC_GPIO	GPIO	Alt0	GPIO2.IO[10]	Input with PD

Table continues on the next page...

All information provided in this document is subject to legal disclaimers.

© 2026 NXP B.V. All rights reserved.

Downloaded from Arrow.com.

Table 91. 11 x 11 mm functional contact assignment *...continued*

Ball name	11 x 11 ball	Power group	Ball Types	Default setting		
				Default modes	Default function	Status while reset is asserted
GPIO_IO11	N18	NVCC_GPIO	GPIO	Alt0	GPIO2.IO[11]	Input with PD
GPIO_IO12	N20	NVCC_GPIO	GPIO	Alt0	GPIO2.IO[12]	Input with PD
GPIO_IO13	N21	NVCC_GPIO	GPIO	Alt0	GPIO2.IO[13]	Input with PD
GPIO_IO14	P20	NVCC_GPIO	GPIO	Alt0	GPIO2.IO[14]	Input with PD
GPIO_IO15	P21	NVCC_GPIO	GPIO	Alt0	GPIO2.IO[15]	Input with PD
GPIO_IO16	R21	NVCC_GPIO	GPIO	Alt0	GPIO2.IO[16]	Input with PD
GPIO_IO17	R20	NVCC_GPIO	GPIO	Alt0	GPIO2.IO[17]	Input with PD
GPIO_IO18	R18	NVCC_GPIO	GPIO	Alt0	GPIO2.IO[18]	Input with PD
GPIO_IO19	R17	NVCC_GPIO	GPIO	Alt0	GPIO2.IO[19]	Input with PD
GPIO_IO20	T20	NVCC_GPIO	GPIO	Alt0	GPIO2.IO[20]	Input with PD
GPIO_IO21	T21	NVCC_GPIO	GPIO	Alt0	GPIO2.IO[21]	Input with PD
GPIO_IO22	U18	NVCC_GPIO	GPIO	Alt0	GPIO2.IO[22]	Input with PD
GPIO_IO23	U20	NVCC_GPIO	GPIO	Alt0	GPIO2.IO[23]	Input with PD
GPIO_IO24	U21	NVCC_GPIO	GPIO	Alt0	GPIO2.IO[24]	Input with PD
GPIO_IO25	V21	NVCC_GPIO	GPIO	Alt0	GPIO2.IO[25]	Input with PD
GPIO_IO26	V20	NVCC_GPIO	GPIO	Alt0	GPIO2.IO[26]	Input with PD
GPIO_IO27	W21	NVCC_GPIO	GPIO	Alt0	GPIO2.IO[27]	Input with PD
GPIO_IO28	W20	NVCC_GPIO	GPIO	Alt0	GPIO2.IO[28]	Input with PD
GPIO_IO29	Y21	NVCC_GPIO	GPIO	Alt0	GPIO2.IO[29]	Input with PD
I2C1_SCL	C20	NVCC_AON	GPIO	Alt5	GPIO1.IO[0]	Input with PD
I2C1_SDA	C21	NVCC_AON	GPIO	Alt5	GPIO1.IO[1]	Input with PD
I2C2_SCL	D20	NVCC_AON	GPIO	Alt5	GPIO1.IO[2]	Input with PD
I2C2_SDA	D21	NVCC_AON	GPIO	Alt5	GPIO1.IO[3]	Input with PD

Table continues on the next page...

All information provided in this document is subject to legal disclaimers.

© 2026 NXP B.V. All rights reserved.

Downloaded from Arrow.com.

Table 91. 11 x 11 mm functional contact assignment *...continued*

Ball name	11 x 11 ball	Power group	Ball Types	Default setting		
				Default modes	Default function	Status while reset is asserted
ONOFF	A19	NVCC_BBSM_1P8	GPIO	Alt0	BBSMMIX.ONOFF	Input without PU / PD
PDM_BIT_STREAM0	J17	NVCC_AON	GPIO	Alt5	GPIO1.IO[9]	Input with PD
PDM_BIT_STREAM1	G18	NVCC_AON	GPIO	Alt5	GPIO1.IO[10]	Input with PD
PDM_CLK	G17	NVCC_AON	GPIO	Alt5	GPIO1.IO[8]	Input with PD
PMIC_ON_REQ	A17	NVCC_BBSM_1P8	GPIO	Alt0	BBSMMIX.PMIC_ON_REQ	Output high without PU / PD
PMIC_STBY_REQ	B18	NVCC_BBSM_1P8	GPIO	Alt0	BBSMMIX.PMIC_STBY_REQ	Output low without PU / PD
POR_B	A16	NVCC_BBSM_1P8	GPIO	Alt0	BBSMMIX.POR_B	Input without PU / PD
RTC_XTALI	E16	NVCC_BBSM_1P8	ANALOG	Alt0	BBSMMIX.RTC	—
RTC_XTALO	D16	NVCC_BBSM_1P8	ANALOG	—	—	—
SAI1_RXD0	H20	NVCC_AON	GPIO	Alt5	GPIO1.IO[14]	Input with PD
SAI1_TXC	G20	NVCC_AON	GPIO	Alt5	GPIO1.IO[12]	Input with PD
SAI1_TXD0	H21	NVCC_AON	GPIO	Alt5	GPIO1.IO[13] CCMSRCGPCMIX.BOOT_MODE[3]	Input with PD
SAI1_TXFS	G21	NVCC_AON	GPIO	Alt5	GPIO1.IO[11] CCMSRCGPCMIX.BOOT_MODE[2]	Input with PD
SD1_CLK	Y11	NVCC_WAKEUP	GPIO	Alt5	GPIO3.IO[8]	Input with PD
SD1_CMD	AA12	NVCC_WAKEUP	GPIO	Alt5	GPIO3.IO[9]	Input with PD
SD1_DATA0	AA14	NVCC_WAKEUP	GPIO	Alt5	GPIO3.IO[10]	Input with PD
SD1_DATA1	AA15	NVCC_WAKEUP	GPIO	Alt5	GPIO3.IO[11]	Input with PD
SD1_DATA2	AA16	NVCC_WAKEUP	GPIO	Alt5	GPIO3.IO[12]	Input with PD

Table continues on the next page...

All information provided in this document is subject to legal disclaimers.

© 2026 NXP B.V. All rights reserved.

Downloaded from Arrow.com.

Table 91. 11 x 11 mm functional contact assignment *...continued*

Ball name	11 x 11 ball	Power group	Ball Types	Default setting		
				Default modes	Default function	Status while reset is asserted
SD1_DATA3	AA13	NVCC_WAKEUP	GPIO	Alt5	GPIO3.IO[13]	Input with PD
SD1_DATA4	Y13	NVCC_WAKEUP	GPIO	Alt5	GPIO3.IO[14]	Input with PD
SD1_DATA5	Y14	NVCC_WAKEUP	GPIO	Alt5	GPIO3.IO[15]	Input with PD
SD1_DATA6	Y15	NVCC_WAKEUP	GPIO	Alt5	GPIO3.IO[16]	Input with PD
SD1_DATA7	Y16	NVCC_WAKEUP	GPIO	Alt5	GPIO3.IO[17]	Input with PD
SD1_STROBE	Y12	NVCC_WAKEUP	GPIO	Alt5	GPIO3.IO[18]	Input without PU / PD
SD2_CD_B	Y17	NVCC_SD2	GPIO	Alt5	GPIO3.IO[0]	Input with PD
SD2_CLK	AA19	NVCC_SD2	GPIO	Alt5	GPIO3.IO[1]	Input with PD
SD2_CMD	Y19	NVCC_SD2	GPIO	Alt5	GPIO3.IO[2]	Input with PD
SD2_DATA0	Y18	NVCC_SD2	GPIO	Alt5	GPIO3.IO[3]	Input with PD
SD2_DATA1	AA18	NVCC_SD2	GPIO	Alt5	GPIO3.IO[4]	Input with PD
SD2_DATA2	Y20	NVCC_SD2	GPIO	Alt5	GPIO3.IO[5]	Input with PD
SD2_DATA3	AA20	NVCC_SD2	GPIO	Alt5	GPIO3.IO[6]	Input with PD
SD2_RESET_B	AA17	NVCC_SD2	GPIO	Alt5	GPIO3.IO[7]	Input with PD
SD2_VSELECT	V18	NVCC_WAKEUP	GPIO	Alt5	GPIO3.IO[19]	Input with PD
SD3_CLK	V16	NVCC_WAKEUP	GPIO	Alt5	GPIO3.IO[20]	Input with PD
SD3_CMD	U16	NVCC_WAKEUP	GPIO	Alt5	GPIO3.IO[21]	Input with PD
SD3_DATA0	T16	NVCC_WAKEUP	GPIO	Alt5	GPIO3.IO[22]	Input with PD
SD3_DATA1	V14	NVCC_WAKEUP	GPIO	Alt5	GPIO3.IO[23]	Input with PD
SD3_DATA2	U14	NVCC_WAKEUP	GPIO	Alt5	GPIO3.IO[24]	Input with PD
SD3_DATA3	T14	NVCC_WAKEUP	GPIO	Alt5	GPIO3.IO[25]	Input with PD
TAMPER0	B16	NVCC_BBSM_1P8	GPIO	Alt0	BBSMMIX.TAMPER0	Input with PU
TAMPER1	F14	NVCC_BBSM_1P8	GPIO	Alt0	BBSMMIX.TAMPER1	Input with PU

Table continues on the next page...

All information provided in this document is subject to legal disclaimers.

© 2026 NXP B.V. All rights reserved.

Downloaded from Arrow.com.

Table 91. 11 x 11 mm functional contact assignment *...continued*

Ball name	11 x 11 ball	Power group	Ball Types	Default setting		
				Default modes	Default function	Status while reset is asserted
UART1_RXD	E20	NVCC_AON	GPIO	Alt5	GPIO1.IO[4]	Input with PD
UART1_TXD	E21	NVCC_AON	GPIO	Alt5	GPIO1.IO[5] CCMSRCGPCMIX.BOOT_MODE[0]	Input with PD
UART2_RXD	F20	NVCC_AON	GPIO	Alt5	GPIO1.IO[6]	Input with PD
UART2_TXD	F21	NVCC_AON	GPIO	Alt5	GPIO1.IO[7] CCMSRCGPCMIX.BOOT_MODE[1]	Input with PD
USB1_D_N	A14	VDD_USB_3P3	PHY	—	—	—
USB1_D_P	B14	VDD_USB_3P3	PHY	—	—	—
USB1_ID	C11	VDD_USB_1P8	PHY	—	—	—
USB1_TXRTUNE	D12	VDD_USB_1P8	PHY	—	—	—
USB1_VBUS	F12	VDD_USB_3P3	PHY	—	—	—
USB2_D_N	A15	VDD_USB_3P3	PHY	—	—	—
USB2_D_P	B15	VDD_USB_3P3	PHY	—	—	—
USB2_ID	E12	VDD_USB_1P8	PHY	—	—	—
USB2_TXRTUNE	D14	VDD_USB_1P8	PHY	—	—	—
USB2_VBUS	E14	VDD_USB_3P3	PHY	—	—	—
WDOG_ANY	J18	NVCC_AON	GPIO	Alt0	WDOG1.WDOG_ANY	Input with PD
XTALI_24M	D18	VDD_ANA0_1P8	ANALOG	—	—	—
XTALO_24M	E18	VDD_ANA0_1P8	ANALOG	—	—	—

[1] Pull-up
[2] Pull-down

6.2.3 11 x 11 mm, 0.5 mm pitch, ball map

Table 92 shows the 11 x 11 mm, 0.5 mm pitch ball map for the i.MX 91.

All information provided in this document is subject to legal disclaimers.

© 2026 NXP B.V. All rights reserved.

Downloaded from Arrow.com.

Table 92. 11 x 11 mm, 0.5 mm pitch, ball map

	1	2	3	4	5	6	7	8	9	10	11	12	13	14	15	16	17	18	19	20	21	
A	VSS											NC_A12	NC_A13	USB1_D_N	USB2_D_N	POR_B	PMIC_ON_REQ	CLKIN2	ONOFF	ADC_IN1	VSS	A
B												NC_B12	NC_B13	USB1_D_P	USB2_D_P	TAMPER0	CLKIN1	PMIC_STBY_REQ	ADC_IN0	ADC_IN2	ADC_IN3	B
C		VSS		VSS		VSS		VSS		VSS	USB1_ID	VSS		VSS		VSS		VSS		I2C1_SCL	I2C1_SDA	C
D	DRAM_CA5_A	DRAM_RESET_N		DRAM_MTEST1								USB1_TXRTUNE		USB2_TXRTUNE		RXC_XTALO		XTALI_24M		I2C2_SCL	I2C2_SDA	D
E	DRAM_CA3_A	DRAM_CA4_A	VSS	DRAM_ZQ				VDD_USB_1P8				USB2_ID		USB2_VBUS		RTC_XTALI		XTALO_24M	VSS	UART1_RXD	UART1_TXD	E
F	DRAM_CS0_A	DRAM_CA2_A								VDD_USB_0P8		USB1_VBUS		TAMPER1		VDD_ANA0_1P8				UART2_RXD	UART2_TXD	F
G	DRAM_CA1_A	DRAM_CS1_A	VSS	DRAM_CK_T_A	DRAM_CK_C_A	VDD2_DDR				VDD_USB_3P3		NVCC_BBSM_1P8		VDD_BBSM_0P8_CAP		VDD_ANA0_1P8	PDM_CLK	PDM_BIT_STREAM1	VSS	SAI1_TXC	SAI1_TXFS	G

Table continues on the next page...

All information provided in this document is subject to legal disclaimers.

© 2026 NXP B.V. All rights reserved.

Downloaded from Arrow.com.

Table 92. 11 x 11 mm, 0.5 mm pitch, ball map *...continued*

	1	2	3	4	5	6	7	8	9	10	11	12	13	14	15	16	17	18	19	20	21	
H	DRAM_CKE0_A	DRAM_CA0_A						VSS		VSS		VSS		VSS						SAI1_RXD0	SAI1_TXD0	H
J	DRAM_DQ06_A	DRAM_DQ07_A	VSS	DRAM_CKE1_A	VSS	VDD2_DDR	VDD2_DDR	VSS	VDD_SOC	VDD_SOC	VDD_SOC	VDD_SOC	VDD_SOC	VSS	VDD_ANA_0P8	VDD_ANA_0P8	PDM_BIT_STREAM0	WDOG_ANY	VSS	GPIO_IO01	GPIO_IO00	J
K	DRAM_DQ04_A	DRAM_DQ05_A							VDD_SOC	VDD_SOC	VSS	VDD_SOC	VDD_SOC							GPIO_IO02	GPIO_IO03	K
L	VSS	DRAM_DMI0_A	VSS	DRAM_DQS0_C_A	VSS	VDD2_DDR	VDD2_DDR	VSS						VSS	VDD_ANAVDET_1P8	NVCC_AON	GPIO_IO04	GPIO_IO05	VSS	GPIO_IO06	GPIO_IO07	L
M	DRAM_DQ02_A	DRAM_DQ03_A							VDD_SOC	VDD_SOC	VSS	VDD_SOC	VDD_SOC							GPIO_IO08	GPIO_IO09	M
N	DRAM_DQ00_A	DRAM_DQ01_A	VSS	DRAM_DQS0_T_A	VSS	VDD2_DDR	VDD2_DDR	VSS	VDD_SOC	VDD_SOC	VDD_SOC	VDD_SOC	VDD_SOC	VSS	NVCC_GPIO	NVCC_GPIO	GPIO_IO10	GPIO_IO11	VSS	GPIO_IO12	GPIO_IO13	N

Table continues on the next page...

All information provided in this document is subject to legal disclaimers.

© 2026 NXP B.V. All rights reserved.

Downloaded from Arrow.com.

Table 92. 11 x 11 mm, 0.5 mm pitch, ball map *...continued*

	1	2	3	4	5	6	7	8	9	10	11	12	13	14	15	16	17	18	19	20	21	
P	DRAM_DQ15_A	DRAM_DQ14_A						VSS		VSS		VSS		VSS						GPIO_IO14	GPIO_IO15	**P**
R	DRAM_DQ12_A	DRAM_DQ13_A	VSS	DRAM_DQS1_T_A	DRAM_DQS1_C_A	VDD2_DDR		VDD_ANA1_1P8		NVCC_WAKEUP		NVCC_WAKEUP		VDD_ANA_0P8		NVCC_SD2	GPIO_IO19	GPIO_IO18	VSS	GPIO_IO17	GPIO_IO16	**R**
T	VSS	DRAM_DMI1_A				VDD2_DDR		ENET2_TD0		ENET2_TD3		ENET1_TD1		SD3_DATA3		SD3_DATA0				GPIO_IO20	GPIO_IO21	**T**
U	DRAM_DQ11_A	DRAM_DQ10_A	VSS	CCM_CLKO3		ENET2_TXC		ENET2_TD1		ENET1_TXC		ENET1_TD2		SD3_DATA2		SD3_CMD		GPIO_IO22	VSS	GPIO_IO23	GPIO_IO24	**U**
V	DRAM_DQ08_A	DRAM_DQ09_A		CCM_CLKO4		ENET2_TX_CTL		ENET2_TD2		ENET1_TX_CTL		ENET1_TD3		SD3_DATA1		SD3_CLK		SD2_VSELECT		GPIO_IO26	GPIO_IO25	**V**
W	DAP_TDI	DAP_TMS_SWDIO		VSS		VSS		NVCC_WAKEUP		VSS	ENET1_TD0	VSS		VSS		VSS		VSS		GPIO_IO28	GPIO_IO27	**W**
Y	DAP_TCLK_S	DAP_TDO_T	CCM_CLKO2	ENET2_R	ENET2_RD1	ENET2_RD3	ENET2_MDC	ENET1_R	ENET1_RD1	ENET1_RD3	SD1_CLK	SD1_STROBE	SD1_DATA4	SD1_DATA5	SD1_DATA6	SD1_DATA7	SD2_CD_B	SD2_DATA0	SD2_CMD	SD2_DATA2	GPIO_IO29	**Y**

Table continues on the next page...

All information provided in this document is subject to legal disclaimers.

© 2026 NXP B.V. All rights reserved.

Downloaded from Arrow.com.

Table 92. 11 x 11 mm, 0.5 mm pitch, ball map *...continued*

	1	2	3	4	5	6	7	8	9	10	11	12	13	14	15	16	17	18	19	20	21	
	WCLK	RACESWO		X_CTL				X_CTL														
AA	VSS	CCM_CLKO1	ENET2_RXC	ENET2_RD0	ENET2_RD2	ENET2_MDIO	ENET1_RXC	ENET1_RD0	ENET1_RD2	ENET1_MDIO	ENET1_MDC	SD1_CMD	SD1_DATA3	SD1_DATA0	SD1_DATA1	SD1_DATA2	SD2_RESET_B	SD2_DATA1	SD2_CLK	SD2_DATA3	VSS	**AA**
	1	**2**	**3**	**4**	**5**	**6**	**7**	**8**	**9**	**10**	**11**	**12**	**13**	**14**	**15**	**16**	**17**	**18**	**19**	**20**	**21**	

All information provided in this document is subject to legal disclaimers.

© 2026 NXP B.V. All rights reserved.

Downloaded from Arrow.com.

7 Revision history

Table 93 provides a revision history for this data sheet.

Table 93. i.MX 91 Data Sheet document revision history

Document ID	Release date	Description
IMX91CEC v.5.0	16 March 2026	Product Datasheet • Updated Figure 49 • Updated " Part number nomenclature—i.MX 91 " figure in Ordering information • Updated Figure 3 • Added note in DDR mode • Added note in SDR mode • Added note in SDR mode with FlexSPI*n*_MCR0[RXCLKSRC] = 0x0, 0x1 • Added note in DDR mode with FlexSPI*n*_MCR0[RXCLKSRC] = 0x0, 0x1 • Corrected typo from 'GEDT Enabled' to "GDET" in Table 2 • Updated Table 23 • Updated Table 25 • Updated footnote information for "Vin/Vout" in Table 7
IMX91CEC v.4.0	6 March 2025	• Updated Table 2 • Updated the descriptions about DRAM, LCDIF, Audio, Connectivity in Table 1 • Updated the description about ONOFF and XTALI_24/XTALO_24M in Table 3 • Added Table 11 • Added Chip power in different Low Power modes • Updated Table 25 • Updated descriptions of DDR SDRAM–specific parameters (LPDDR4) • Added a footnote in Table 31 • Added a footnote in Table 56 • Added a footnote in Table 38 • Updated the unit of C_{sample}, $C_{compare}$, and $C_{conversion}$ to cycle in Table 39; removed the maximum value of $C_{compare}$ and second ADC clock in Table 39; added ENOB lavues in Table 39 • Removed Table. ADC electrical specifications (VREFH = VDD_ANAx_1p8 and $VADIN_{max}$ ≤ VREFH) • Removed BCAN, BCANXL, and minimum operating frequency from Table 60 • Added the maximum frequency footnotes in FlexSPI timing parameters
IMX91CEC v.3.0	03 Jan 2025	• Updated special fuse in Figure 1

Table continues on the next page...

All information provided in this document is subject to legal disclaimers.

© 2026 NXP B.V. All rights reserved.

Downloaded from Arrow.com.

Table 93. i.MX 91 Data Sheet document revision history*...continued*

Document ID	Release date	Description
		• Updated the descriptions of External clock sources • Updated the SUSPEND status of XTAL in Table 20 • Added General purpose I/O (GPIO) AC parameters • Updated the footnote of Table 26 • Updated the typical value of ENOB in Table. ADC electrical specifications (VREFH = VDD_ANAx_1p8 and $VADIN_{max}$ ≤ VREFH) • Added LPUART I/O configuration and timing parameters • Updated the default function of SAI1_RXD0 in Table 88 and Table 91
IMX91CEC v.2.0	12 Dec 2024	• Updated Table 2 • Removed Module list • Updated Table 4 • Updated Table 8 • Updated the maximum voltage of VDD_SOC in low drive mode and added a footnote in Table 12 • Added a footnote in Table 13 • Updated Clock sources • Updated Maximum supply currents • Updated Table 19 • Updated the NVCC_BBSIM_1P8 in Figure 4 • Updated Table 22 • Updated Table 23 and Table 24 • Removed GPIO AC parameters • Added Table 32 • Updated Table 56 • Updated I3C Push-Pull Timing Parameters for SDR Mode • Removed LPUART I/O configuration and timing parameters • Removed USB PHY worst power consumption
IMX91CEC v.1.0	30/06/2024	• Initial version

All information provided in this document is subject to legal disclaimers.

© 2026 NXP B.V. All rights reserved.

Downloaded from Arrow.com.

Legal information

Data sheet status

Document status[1][2]	Product status[3]	Definition
Objective [short] data sheet	Development	This document contains data from the objective specification for product development.
Preliminary [short] data sheet	Qualification	This document contains data from the preliminary specification.
Product [short] data sheet	Production	This document contains the product specification.

[1] Please consult the most recently issued document before initiating or completing a design.
[2] The term 'short data sheet' is explained in section "Definitions".
[3] The product status of device(s) described in this document may have changed since this document was published and may differ in case of multiple devices. The latest product status information is available on the Internet at URL https://www.nxp.com.

Definitions

Draft — A draft status on a document indicates that the content is still under internal review and subject to formal approval, which may result in modifications or additions. NXP Semiconductors does not give any representations or warranties as to the accuracy or completeness of information included in a draft version of a document and shall have no liability for the consequences of use of such information.

Short data sheet — A short data sheet is an extract from a full data sheet with the same product type number(s) and title. A short data sheet is intended for quick reference only and should not be relied upon to contain detailed and full information. For detailed and full information see the relevant full data sheet, which is available on request via the local NXP Semiconductors sales office. In case of any inconsistency or conflict with the short data sheet, the full data sheet shall prevail.

Product specification — The information and data provided in a Product data sheet shall define the specification of the product as agreed between NXP Semiconductors and its customer, unless NXP Semiconductors and customer have explicitly agreed otherwise in writing. In no event however, shall an agreement be valid in which the NXP Semiconductors product is deemed to offer functions and qualities beyond those described in the Product data sheet.

Disclaimers

Limited warranty and liability — Information in this document is believed to be accurate and reliable. However, NXP Semiconductors does not give any representations or warranties, expressed or implied, as to the accuracy or completeness of such information and shall have no liability for the consequences of use of such information. NXP Semiconductors takes no responsibility for the content in this document if provided by an information source outside of NXP Semiconductors.

In no event shall NXP Semiconductors be liable for any indirect, incidental, punitive, special or consequential damages (including - without limitation - lost profits, lost savings, business interruption, costs related to the removal or replacement of any products or rework charges) whether or not such damages are based on tort (including negligence), warranty, breach of contract or any other legal theory.

Notwithstanding any damages that customer might incur for any reason whatsoever, NXP Semiconductors' aggregate and cumulative liability towards customer for the products described herein shall be limited in accordance with the Terms and conditions of commercial sale of NXP Semiconductors.

Right to make changes — NXP Semiconductors reserves the right to make changes to information published in this document, including without limitation specifications and product descriptions, at any time and without notice. This document supersedes and replaces all information supplied prior to the publication hereof.

Suitability for use — NXP Semiconductors products are not designed, authorized or warranted to be suitable for use in life support, life-critical or safety-critical systems or equipment, nor in applications where failure or malfunction of an NXP Semiconductors product can reasonably be expected to result in personal injury, death or severe property or environmental damage. NXP Semiconductors and its suppliers accept no liability for inclusion and/or use of NXP Semiconductors products in such equipment or applications and therefore such inclusion and/or use is at the customer's own risk.

All information provided in this document is subject to legal disclaimers.

© 2026 NXP B.V. All rights reserved.

Downloaded from Arrow.com.

Applications — Applications that are described herein for any of these products are for illustrative purposes only. NXP Semiconductors makes no representation or warranty that such applications will be suitable for the specified use without further testing or modification.

Customers are responsible for the design and operation of their applications and products using NXP Semiconductors products, and NXP Semiconductors accepts no liability for any assistance with applications or customer product design. It is customer's sole responsibility to determine whether the NXP Semiconductors product is suitable and fit for the customer's applications and products planned, as well as for the planned application and use of customer's third party customer(s). Customers should provide appropriate design and operating safeguards to minimize the risks associated with their applications and products.

NXP Semiconductors does not accept any liability related to any default, damage, costs or problem which is based on any weakness or default in the customer's applications or products, or the application or use by customer's third party customer(s). Customer is responsible for doing all necessary testing for the customer's applications and products using NXP Semiconductors products in order to avoid a default of the applications and the products or of the application or use by customer's third party customer(s). NXP does not accept any liability in this respect.

Limiting values — Stress above one or more limiting values (as defined in the Absolute Maximum Ratings System of IEC 60134) will cause permanent damage to the device. Limiting values are stress ratings only and (proper) operation of the device at these or any other conditions above those given in the Recommended operating conditions section (if present) or the Characteristics sections of this document is not warranted. Constant or repeated exposure to limiting values will permanently and irreversibly affect the quality and reliability of the device.

Terms and conditions of commercial sale — NXP Semiconductors products are sold subject to the general terms and conditions of commercial sale, as published at https://www.nxp.com/profile/terms, unless otherwise agreed in a valid written individual agreement. In case an individual agreement is concluded only the terms and conditions of the respective agreement shall apply. NXP Semiconductors hereby expressly objects to applying the customer's general terms and conditions with regard to the purchase of NXP Semiconductors products by customer.

No offer to sell or license — Nothing in this document may be interpreted or construed as an offer to sell products that is open for acceptance or the grant, conveyance or implication of any license under any copyrights, patents or other industrial or intellectual property rights.

Quick reference data — The Quick reference data is an extract of the product data given in the Limiting values and Characteristics sections of this document, and as such is not complete, exhaustive or legally binding.

Export control — This document as well as the item(s) described herein may be subject to export control regulations. Export might require a prior authorization from competent authorities.

Suitability for use in non-automotive qualified products — Unless this document expressly states that this specific NXP Semiconductors product is automotive qualified, the product is not suitable for automotive use. It is neither qualified nor tested in accordance with automotive testing or application requirements. NXP Semiconductors accepts no liability for inclusion and/or use of non-automotive qualified products in automotive equipment or applications.

In the event that customer uses the product for design-in and use in automotive applications to automotive specifications and standards, customer (a) shall use the product without NXP Semiconductors' warranty of the product for such automotive applications, use and specifications, and (b) whenever customer uses the product for automotive applications beyond NXP Semiconductors' specifications such use shall be solely at customer's own risk, and (c) customer fully indemnifies NXP Semiconductors for any liability, damages or failed product claims resulting from customer design and use of the product for automotive applications beyond NXP Semiconductors' standard warranty and NXP Semiconductors' product specifications.

HTML publications — An HTML version, if available, of this document is provided as a courtesy. Definitive information is contained in the applicable document in PDF format. If there is a discrepancy between the HTML document and the PDF document, the PDF document has priority.

Translations — A non-English (translated) version of a document, including the legal information in that document, is for reference only. The English version shall prevail in case of any discrepancy between the translated and English versions.

Security — Customer understands that all NXP products may be subject to unidentified vulnerabilities or may support established security standards or specifications with known limitations. Customer is responsible for the design and operation of its applications and products throughout their lifecycles to reduce the effect of these vulnerabilities on customer's applications and products. Customer's responsibility also extends to other open and/or proprietary technologies supported by NXP products for use in customer's applications. NXP accepts no liability for any vulnerability. Customer should regularly check security updates from NXP and follow up appropriately.

Customer shall select products with security features that best meet rules, regulations, and standards of the intended application and make the ultimate design decisions regarding its products and is solely responsible for compliance with all legal, regulatory, and security related requirements concerning its products, regardless of any information or support that may be provided by NXP.

NXP has a Product Security Incident Response Team (PSIRT) (reachable at PSIRT@nxp.com) that manages the investigation, reporting, and solution release to security vulnerabilities of NXP products.

NXP B.V. — NXP B.V. is not an operating company and it does not distribute or sell products.

Trademarks

Notice: All referenced brands, product names, service names, and trademarks are the property of their respective owners.

All information provided in this document is subject to legal disclaimers.

© 2026 NXP B.V. All rights reserved.

Downloaded from Arrow.com.

NXP — wordmark and logo are trademarks of NXP B.V.

AMBA, Arm, Arm7, Arm7TDMI, Arm9, Arm11, Artisan, big.LITTLE, Cordio, CoreLink, CoreSight, Cortex, DesignStart, DynamIQ, Jazelle, Keil, Mali, Mbed, Mbed Enabled, NEON, POP, RealView, SecurCore, Socrates, Thumb, TrustZone, ULINK, ULINK2, ULINK-ME, ULINK-PLUS, ULINKpro, µVision, Versatile — are trademarks and/or registered trademarks of Arm Limited (or its subsidiaries or affiliates) in the US and/or elsewhere. The related technology may be protected by any or all of patents, copyrights, designs and trade secrets. All rights reserved.

EdgeLock — is a trademark of NXP B.V.

eIQ — is a trademark of NXP B.V.

Synopsys & Designware — are registered trademarks of Synopsys, Inc.

Synopsys — Portions Copyright © 2018-2022 Synopsys, Inc. Used with permission. All rights reserved.

Downloaded from Arrow.com.

Contents

1 i.MX 91 introduction....2
1.1 Ordering information....4
2 System block diagram....6
3 Special signal considerations....7
3.1 Unused input and output guidance....7
4 Electrical characteristics....8
4.1 Chip-level conditions....8
4.1.1 Absolute maximum ratings....9
4.1.2 Thermal resistance....10
4.1.3 Power architecture....11
4.1.4 Operating ranges....13
4.1.5 Maximum frequency of modules....14
4.1.6 Clock sources....14
4.1.7 Maximum supply currents....15
4.2 Power modes....16
4.2.1 Power mode definition....16
4.2.2 Low power modes....17
4.2.3 Chip power in different Low Power modes....18
4.3 Power supplies requirements and restrictions..19
4.3.1 Power-up sequence....19
4.3.2 Power-down sequence....20
4.4 PLL electrical characteristics....20
4.5 I/O DC parameters....20
4.5.1 General purpose I/O (GPIO) DC parameters...21
4.5.2 DDR I/O DC electrical characteristics....21
4.6 I/O AC parameters....22
4.6.1 General purpose I/O (GPIO) AC parameters...22
4.6.2 DDR I/O AC electrical characteristics....24
4.7 Differential I/O output buffer impedance....24
4.7.1 DDR I/O output buffer impedance....24
4.8 System modules timing....24
4.8.1 Reset timing parameters....24
4.8.2 WDOG Reset timing parameters....25
4.8.3 JTAG timing parameters....25
4.8.4 SWD timing parameters....27
4.8.5 DDR SDRAM–specific parameters (LPDDR4).28
4.9 Display....29
4.9.1 LCD Controller (LCDIF) timing parameters....29
4.10 Audio....30
4.10.1 SAI switching specifications....30
4.10.2 SPDIF timing parameters....32
4.10.3 PDM Microphone interface timing parameters 34
4.10.4 Medium Quality Sound (MQS) electrical specifications....35
4.11 Analog....35
4.11.1 12-bit ADC electrical specifications....35
4.12 External peripheral interface parameters....37
4.12.1 Ultra-high-speed SD/SDIO/MMC host interface (uSDHC) AC timing....38
4.12.2 Ethernet controller (ENET) AC electrical specifications....45
4.12.3 Ethernet Quality-of-Service (QoS) electrical specifications....48
4.12.4 LPSPI timing parameters....52
4.12.5 LPI2C timing parameters....55
4.12.6 Improved Inter-Integrated Circuit Interface (I3C) specifications....56
4.12.7 CAN network AC electrical specifications....58
4.12.8 Pulse width modulator (PWM) timing parameters....58
4.12.9 FlexSPI timing parameters....59
4.12.10 LPUART I/O configuration and timing parameters....65
4.12.11 USB PHY parameters....66
5 Boot mode configuration....66
5.1 Boot mode configuration pins....66
5.2 Boot device interface allocation....67
6 Package information and contact assignments 70
6.1 9 x 9 mm package information....70
6.1.1 9 x 9 mm, 0.5 mm pitch, ball matrix....70
6.1.2 9 x 9 mm supplies contact assignments and functional contact assignments....71
6.1.3 9 x 9 mm, 0.5 mm pitch, ball map....79
6.2 11 x 11 mm package information....83
6.2.1 11 x 11 mm, 0.5 mm pitch, ball matrix....83
6.2.2 11 x 11 mm supplies contact assignments and functional contact assignments....84
6.2.3 11 x 11 mm, 0.5 mm pitch, ball map....93
7 Revision history....98
Legal information....100

All information provided in this document is subject to legal disclaimers.

© 2026 NXP B.V. All rights reserved.

Downloaded from Arrow.com.

Please be aware that important notices concerning this document and the product(s) described herein, have been included in section 'Legal information'.

© 2026 NXP B.V. All rights reserved.

For more information, please visit: https://www.nxp.com

Date of release: 16 March 2026
Document identifier: IMX91CEC

Downloaded from Arrow.com.