Encoders | Through shaft Encoder

10mm Size Hollow Shaft Type

EC10E Series

Unique through-shaft design achieving miniaturization and long life.

Automotive

- Output signal:Two phase A and B
- Ratings:1mA 5V DC
- Operating life:100,000 cycles

Applications:Mobile:Notebooks, peripherals
Energy_Industrial:Robots, drones
Game:Home handheld consoles
Automotive:Navigation/audio systems, HVAC,Steering

Product List

Products No.	Control part orientation	Detent torque	Mount height	Number of detent	Number of pulse	Automotive	Drawing No.
EC10E1220505	Horizontal	5±3mN·m	7.0mm	24	12	●	1
EC10E1220501	Horizontal	5±3mN·m	9.0mm	24	12	●	2
EC10E1220503	Horizontal	5±3mN·m	11.0mm	24	12	●	3
EC10E1260502	Horizontal	6±3mN·m	7.0mm	12	12	●	4
EC10E1260507	Horizontal	6±3mN·m	11.0mm	24	12	●	5

⚠Note

1. This catalog shows only outline specifications. When using the products, please obtain formal specifications for supply.
2. Please place purchase orders per minimum order unit (integer).
3. Please contact us for automotive use products.

Packing Specifications

Bulk

Number of packages(pcs.)		Export package measurements (mm)
1 case / Japan	1 case / export packing	
3,200	3,200	374 x 254 x 166

Drawing No.1

Dimensions

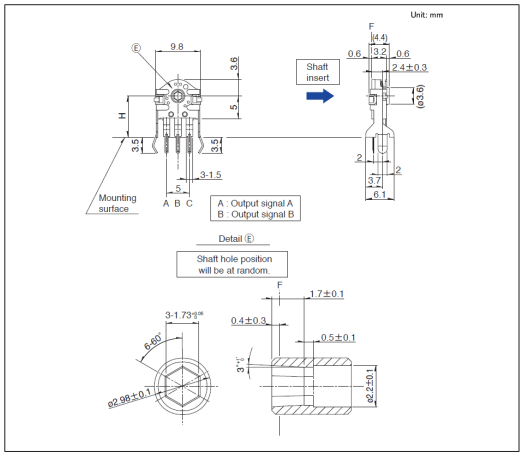

Mount height H = 7mm

Mounting Hole Dimensions

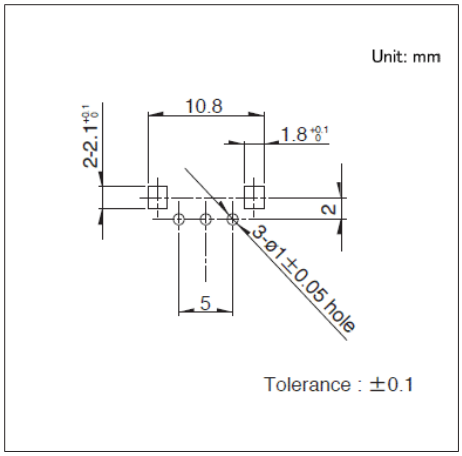

Viewed from mounting side

Downloaded from Arrow.com.

10mm Size Hollow Shaft Type

EC10E Series

Drawing No.2

■ Dimensions

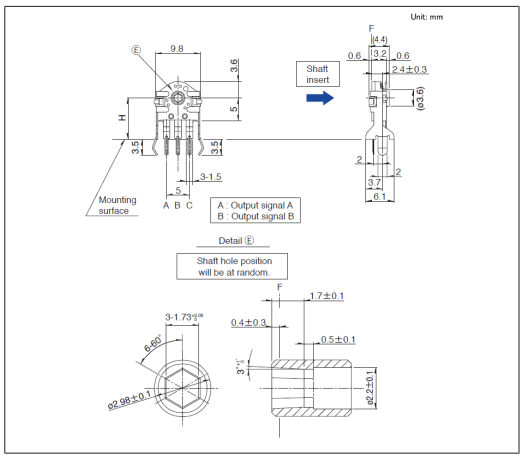

Mount height H = 9mm

■ Mounting Hole Dimensions

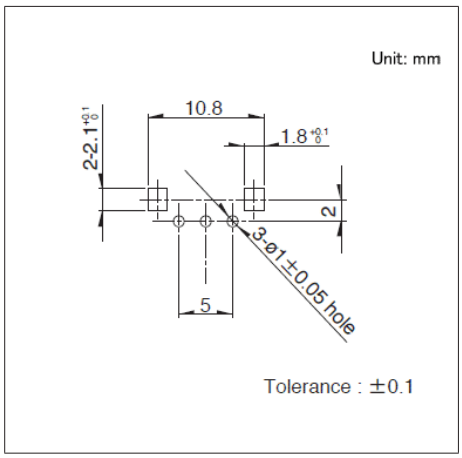

Viewed from mounting side

Drawing No.3

■ Dimensions

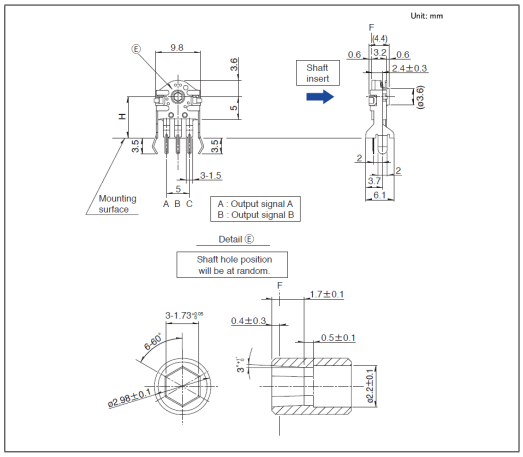

Mount height H = 11mm

■ Mounting Hole Dimensions

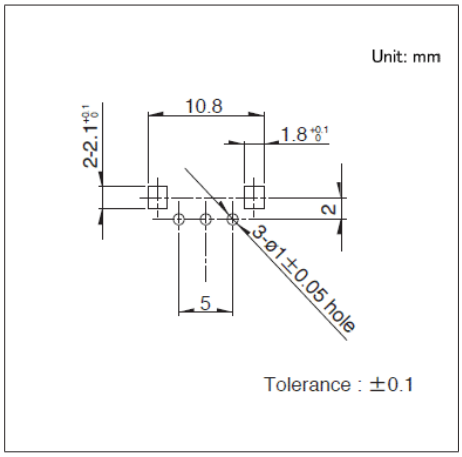

Viewed from mounting side

Drawing No.4

■ Dimensions

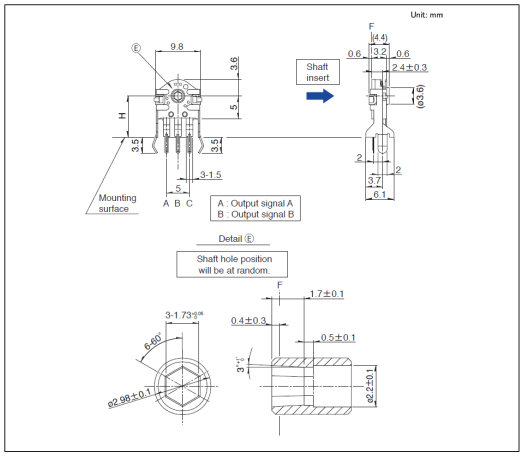

Mount height H = 7mm

■ Mounting Hole Dimensions

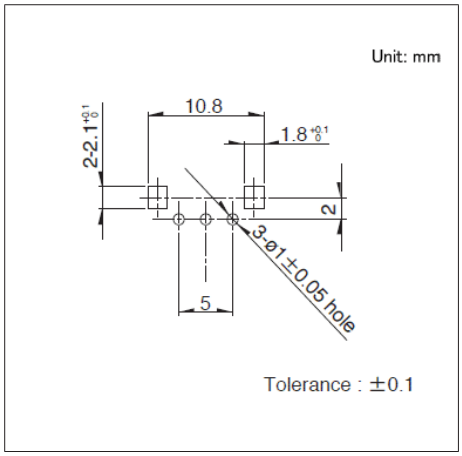

Viewed from mounting side

Downloaded from Arrow.com.

10mm Size Hollow Shaft Type

EC10E Series

Drawing No.5

■ Dimensions

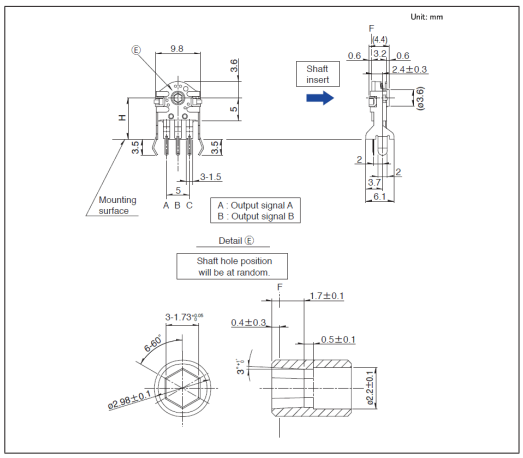

Mount height H = 11mm

■ Mounting Hole Dimensions

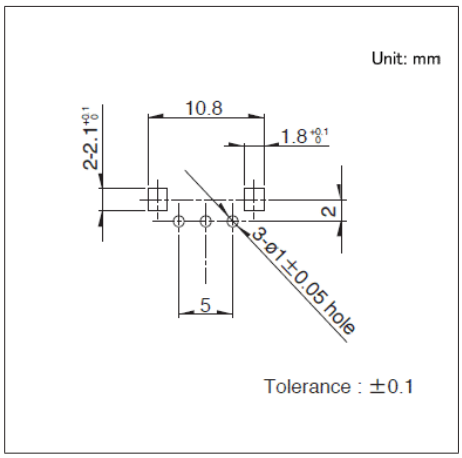

Viewed from mounting side

Downloaded from Arrow.com.