RX63T Group

Renesas MCUs

R01DS0087EJ0220
Rev.2.20
Mar 31, 2016

100-MHz 32-bit RX MCU, on-chip FPU, 165 DMIPS,
Two 12-bit ADCs (three S/H circuits, double data registers, amplifier, comparator), one 10-bit ADC, simultaneous sampling on 7 channels using three ADCs, 100 MHz PWM (2 three-phase complementary channels + 4 single-phase complementary channels or 3 three-phase complementary channels + 1 single-phase complementary channel)

Features

■ 32-bit RX CPU core
- Max. operating frequency: 100 MHz
  Capable of 165 DMIPS in operation at 100 MHz
- Single precision 32-bit IEEE-754 floating point
- Two types of multiply-and-accumulation unit (between memories and between registers)
- 32-bit multiplier (fastest instruction execution takes one CPU clock cycle)
- Divider (fastest instruction execution takes two CPU clock cycles)
- Fast interrupt
- CISC Harvard architecture with 5-stage pipeline
- Variable-length instructions: Ultra-compact code
- Supports the memory protection unit (MPU)
- Two types of debugging interfaces: JTAG and FINE (two-line)

■ Low-power design and architecture
- Single 3.3-V supply or single 5-V supply; 3.3-V products can be used with a 5-V analog power supply
- Four low-power modes

■ On-chip main flash memory, no wait states
- 100-MHz operation, 10-ns read cycle (no wait states)
- Max. 512 Kbytes
- User code is programmable by USB, SCI, or JTAG.

■ On-chip data flash memory
- Max. 32 Kbytes, reprogrammable up to 100,000 times
- Programming/erasing as background operations (BGOs)

■ On-chip SRAM, no wait states
- Max. 48 Kbytes
- For instructions and operands

■ DMA
- DMA: Incorporates four channels
- DTC: A single unit can handle transfer on multiple channels.

■ Reset and supply management
- Power-on reset (POR)
- Low voltage detection (LVD) with voltage settings

■ Clock functions
- External crystal oscillator or internal PLL for operation at 4 to 12.5 MHz
- Internal 125-kHz LOCO
- Dedicated 125-kHz LOCO for the IWDT

■ Independent watchdog timer
- 125-kHz LOCO clock operation

■ Useful functions for IEC60730 compliance
- Oscillation-stop detection, frequency measurement, CRC, IWDT, self-diagnostic function for the A/D converter, etc.

■ External address space
- 4 CS areas (4 × 1 Mbyte)
- Multiplexed address data or separate address lines are selectable per area.
- 8- or 16-bit bus space is selectable per area.

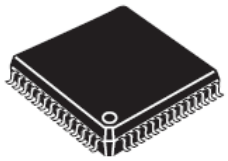

PLQP0144KA-A	20 × 20mm, 0.5mm pitch
PLQP0120KA-A	16 × 16mm, 0.5mm pitch
PLQP0112JA-A	20 × 20mm, 0.65mm pitch
PLQP0100KB-A	14 × 14mm, 0.5mm pitch
PLQP0064KB-A	10 × 10mm, 0.5mm pitch
PLQP0048KB-A	7 × 7mm, 0.5mm pitch

■ Up to 11 communications interfaces
- USB 2.0 full-speed function interface (1 channel)
- CAN (compliant with ISO11898-1), incorporating 32 mailboxes (1 channel)
- SCI with multiple functionalities (5 channels)
  Choose from among asynchronous mode, clock-synchronous mode, smart-card interface mode, simple SPI, simple I^2C, and extended serial mode.
- I^2C bus interface for SMBus (2 channels)
- RSPI for high-speed transfer (2 channels)

■ Up to twenty 16-bit timers
- 16-bit MTU3: 100-MHz operation, input capture, output compare, three-phase complementary PWM waveform output (2 channels), phase-counting mode (8 channels); complementary PWM does not burden the CPU.
- 16-bit GPT: 100-MHz operation, input capture, output compare, 4-channel single-phase complementary PWM waveform output or 1-channel three-phase complementary + 1-channel single-phase complementary output, interlocking with comparator (counter operation, PWM negation control), detection of abnormal oscillation frequencies (useful for IEC60730 compliance)
  (8 channels); complementary PWM does not burden the CPU.
- 16-bit CMT (4 channels)

■ Generation of delays in PWM waveforms (for products with the product ID code 1)
- The timing with which signals on the 16-bit GPT PWM output pin rise and fall can be controlled with an accuracy of up to 312 ps (in operation at 100 MHz).

■ Two A/D converters for 1-MHz operation, total of 8 channels
- Simultaneous sampling on 7 channels is possible with three units.
- Self-diagnosis function (useful for IEC60730 compliance)
- Two 12-bit ADCs: three sample-and-hold circuits, double data registers, amplifier, comparator (8 channels)
- One 10-bit ADC (12 channels)

■ One A/D converter for 2-MHz operation, total of 20 channels
- One 10-bit ADC (20 channels)

■ 10-bit D/A converter: 2 channels

■ Digital Power Supply Controller-Dedicated Calculation Function (for products with product ID code 1)
- 16-bit fixed-point calculation function that handles compensatory calculations in the method of digital control for switched-mode power supplies.

■ Register write protection function can protect values in important registers against overwriting.

■ Up to 110 pins for GPIO
- Open drain, switchable driving ability

■ Operating temp. range
- –40°C to +85°C
- –40°C to +105°C

Downloaded from Arrow.com.

1. Overview

1.1 Outline of Specifications

Table 1.1 lists the specifications in outline, and Table 1.2 lists the functions of products.
Table 1.1 shows an outline of the maximum specifications, and the available peripheral modules and number of channels differ according to the number of pins on the package and the ROM capacity. For details, see Table 1.2, Comparison of Functions for Different Packages.

Table 1.1 Outline of Specifications (1/7)

Classification	Module/Function	Description
CPU	CPU	• Maximum operating frequency: 100 MHz • 32-bit RX CPU • Minimum instruction execution time: One instruction per state (cycle of the system clock) • Address space: 4-Gbyte linear • Register set of the CPU General purpose: Sixteen 32-bit registers Control: Nine 32-bit registers Accumulator: One 64-bit register • Basic instructions: 73 • Floating-point operation instructions: 8 • DSP instructions: 9 • Addressing modes: 10 • Data arrangement Instructions: Little endian Data: Selectable as little endian or big endian • On-chip 32-bit multiplier: 32 × 32 → 64 bits • On-chip divider: 32 / 32 → 32 bits • Barrel shifter: 32 bits • Memory protection unit (MPU)
	FPU	• Single precision floating point (32 bits) • Data types and floating-point exceptions in conformance with the IEEE754 standard
Memory	ROM	• Capacity: 512 Kbytes, 384 Kbytes, 256 Kbytes, 64 Kbytes, 48 Kbytes, 32 Kbytes • 100 MHz, no-wait access • On-board programming: Programs can be modified through SCI or USB while the MCU is mounted on the board. • Off-board programming: Programs can be modified using parallel programmer. (only in 144-, 120-, 112- and 100-pin versions)
	RAM	• Capacity: 48 Kbytes, 32 Kbytes, 24 Kbytes, 8 Kbytes • 100 MHz, no-wait access
	E^2 data flash	• Capacity: 32 Kbytes, 8 Kbytes • Programming/erasing: 100,000 times • On-board programming: Programs can be modified through SCI or USB while the MCU is mounted on the board. Programming from the user program is possible.
MCU operating modes		[144-, 120-, 112- and 100-pin versions] Single-chip mode, on-chip ROM enabled extended mode, on-chip ROM disabled extended mode (switchable by software) [64- and 48-pin versions] Single-chip mode

Downloaded from Arrow.com.

Table 1.1 Outline of Specifications (2/7)

Classification	Module/Function	Description
Clock	Clock generation circuit	• Main clock oscillator, low-speed on-chip oscillator, PLL frequency synthesizer, and dedicated on-chip oscillator for the IWDT • Main-clock oscillation stop detection • Separate frequency-division and multiplication settings for the system clock (ICLK), peripheral module clock (PCLKA), peripheral module clock (PCLKB), AD clock (PCLKC), FlashIF clock (FCLK) and S12AD clock (PCLKD). The CPU and other bus masters run in synchronization with the system clock (ICLK): Up to 100 MHz Multi-function timer pulse unit 3 and general PWM timer run in synchronization with PCLKA: Up to 100 MHz Peripheral modules run in synchronization with the peripheral module clock (PCLKB): Up to 50 MHz Flash IF run in synchronization with the FlashIF clock (FCLK): Up to 50 MHz Devices connected to the external bus run in synchronization with the external bus clock (BCLK): Up to 50 MHz 10-bit A/D converter runs in synchronization with the AD clock (PCLKC): Up to 100 MHz 12-bit A/D converter runs in synchronization with the S12AD clock (PCLKD): Up to 50 MHz
Clock	Clock frequency accuracy measurement circuit (CAC)	The frequency of the following clocks can be measured; the main clock oscillator, PLL circuit, and IWDT-dedicated on-chip oscillator.
Reset		RES# pin reset, power-on reset, voltage-monitoring reset, independent watchdog timer reset, watchdog timer reset, deep software standby reset, and software reset
Voltage detection circuit		When the voltage on VCC passes the voltage detection level (Vdet), an internal reset or internal interrupt is generated.
Low power consumption	Low power consumption facilities	• Module stop function • Four low power consumption modes Sleep mode, all-module clock stop mode, software standby mode, and deep software standby mode
Interrupt	Interrupt controller (ICUb)	• Peripheral function interrupts: Up to 169 sources • External interrupts: Up to 8 (pins IRQ0 to IRQ7) • Software interrupts: One source • Non-maskable interrupts: 6 sources • Sixteen levels specifiable for the order of priority
External bus extension		• The external address space can be divided into four areas (CS0 to CS3), each with independent control of access settings. Capacity of each area: 1 Mbyte (CS0 to CS3) A chip-select signal (CS0# to CS3#) can be output for each area. Each area is specifiable as an 8- or 16-bit bus space The data arrangement in each area is selectable as little or big endian (only for data). • Bus format: Separate bus, multiplex bus • Wait control • Write buffer facility
DMA	DMA controller (DMACA)	• 4 channels • Three transfer modes: Normal transfer, repeat transfer, and block transfer • Activation sources: Software trigger, external interrupts, and interrupt requests from peripheral functions
	Data transfer controller (DTCa)	• Three transfer modes: Normal transfer, repeat transfer, and block transfer • Activation sources: Software interrupt activation register settings, external interrupts, and interrupt requests from peripheral functions

Downloaded from Arrow.com.

Table 1.1 Outline of Specifications (3/7)

Classification	Module/Function	Description
I/O ports	General I/O ports	• 144-pin LQFP I/O pins: 81 Input pins: 29 Open-drain outputs: 27 • 120-pin LQFP I/O pins: 72 Input pin: 21 Open-drain outputs: 26 • 112-pin LQFP I/O pins: 69 Input pins: 21 Open-drain outputs: 20 • 100-pin LQFP I/O pins: 57 Input pins: 21 Open-drain outputs: 16 • 64-pin LQFP I/O pins: 39 Input pins: 9 Open-drain outputs: 10 5-V tolerance: 39 • 48-pin LQFP I/O pins: 25 Input pins: 7 Open-drain outputs: 8 5-V tolerance: 25
Timers	Multi-function timer pulse unit 3 (MTU3)	• (16 bits × 8 channels) • Maximum of 16 pulse-input/output and 3 pulse-input possible • Select eight clocks from among ten count clocks (PCLKA/1, PCLKA/4, PCLKA/16, PCLKA/64, PCLKA/256, PCLKA/1024, MTCLKA, MTCLKB, MTCLKC, and MTCLKD) for each channel (seven clocks for channel 1, four clocks for channel 5, and six clocks for channel 6 or 7) • 24 output compare/input capture registers • Counter-clearing operation (simultaneous clearing on compare match or input capture) • Simultaneous writing to multiple timer counters (TCNT) • Simultaneous input and output to registers in synchronization with counter operations • Buffer operation specifiable • Capable of cascade-connected operation • Interrupts: 38 sources • Automatic transfer of register data • Pulse output modes Topple, PWM, complementary PWM, and reset-synchronous PWM modes • Complementary PWM output mode Outputs non-overlapping waveforms for controlling 3-phase inverters Automatic specification of dead times PWM duty cycle: Selectable as any value from 0% to 100% Delay can be applied to requests for A/D conversion. Non-generation of interrupt requests at peak or trough values of counters can be selected. Double buffering • Reset-synchronous PWM mode Three PWM waveforms and corresponding inverse waveforms are output with the desired duty cycles. • Phase-counting mode • Counter functionality for dead-time compensation • Generation of triggers for A/D converters • Differential timing for initiation of A/D conversion
	Port output enable 3 (POE3)	• Control of the high-impedance state of the MTU3 and GPT's waveform output pins • Six pins for input from signal sources: POE0, POE4, POE8, POE10, POE11, and POE12 • Initiation on detection of short-circuited outputs (detection of PWM outputs having simultaneously become an active level.) • Initiation by comparator-detection, oscillation-stoppage detection, or software • Software control of the states of pins for output control can also be added.

Downloaded from Arrow.com.

Table 1.1 Outline of Specifications (4/7)

Classification	Module/Function	Description
Timers	General PWM timer (GPT)	• 16 bits x 8 channels • Counting up or down (saw-wave), counting up and down (triangle-wave) selectable for all channels • Select from among four count clocks (PCLKA/1, PCLKA/4, PCLKA/8, and PCLKA/16) for each channel • 2 input/output pins per channel • 2 output compare/input capture registers per channel • For the 2 output compare/input capture registers of each channel, 4 registers are provided as buffer registers and are capable of operating as comparison registers when buffering is not in use. • In output compare operation, buffer switching can be at peaks or troughs, enabling the generation of laterally asymmetrically PWM waveforms. • Registers for setting up frame intervals on each channel (with capability for generating interrupts on overflow or underflow) • Synchronizable operation of the several counters • Modes of synchronized operation (synchronized, or displaced by desired times for phase shifting) • Generation of dead times in PWM operation • Through combination of three counters, generation of automatic three-phase PWM waveforms incorporating dead times • Starting, clearing, and stopping counters in response to external or internal triggers • Internal trigger sources: Output of the internal comparator detection, software, and compare-match • The main clock can be used as a counter clock for measuring the timing of the edges of signals produced by frequency-dividing the dedicated clock signal for the IWDT (to detect abnormal oscillation). • A PWM delay with an accuracy of up to 1/32 times the period of the system clock (ICLK) can be generated to control the timing with which signals from the two PWM output pins from each of channels 0 to 3 rise and fall.
	Compare match timer (CMT)	• (16 bits × 2 channels) × 2 units • Select from among four internal clock signals (PCLK/8, PCLK/32, PCLK/128, PCLK/512)
	Watchdog timer (WDTA)	• 14 bits × 1 channel • Select from among 6 counter-input clock signals (PCLK/4, PCLK/64, PCLK/128, PCLK/512, PCLK/2048, PCLK/8192)
	Independent watchdog timer (IWDTa)	• 14 bits × 1 channel • Counter-input clock: Dedicated on-chip oscillator • Dedicated clock/1, dedicated clock/16, dedicated clock/32, dedicated clock/64, dedicated clock/128, dedicated clock/256
Communication function	USB 2.0 host/function module (USBa)	• Includes a UDC (USB Device Controller) and transceiver for USB 2.0 • Single port • Compliance with the USB 2.0 specification • Transfer rate: Full speed (12 Mbps) • Self-power mode and bus power mode are selectable • Supports the OTG (On-The-Go) • Incorporates 2 Kbytes of RAM as a transfer buffer
	Serial communications interfaces (SCIc, SCId)	• 5 channels (SCIc: 4 channels + SCId: 1 channel) • SCIc Serial communications modes: Asynchronous, clock synchronous, and smart-card interface Multi-processor function On-chip baud rate generator allows selection of the desired bit rate Choice of LSB-first or MSB-first transfer Simple I^2C Simple SPI • SCId (The following functions are added to SCIc) Supports the serial communications protocol, which contains the start frame and information frame Supports the LIN format

Downloaded from Arrow.com.

Table 1.1 Outline of Specifications (5/7)

Classification	Module/Function	Description
Communication function	I^2C bus interfaces (RIIC)	• 2 channels Communication formats I^2C bus format/SMBus format Supports the multi-master Max. transfer rate: 400 kbps
	CAN module (CAN)	• 1 channels • Compliance with the ISO11898-1 specification (standard frame and extended frame) • 32 mailboxes per channel
	Serial peripheral interfaces (RSPI)	• 2 channels • RSPI transfer facility Using the MOSI (master out, slave in), MISO (master in, slave out), SSL (slave select), and RSPCK (RSPI clock) signals enables serial transfer through SPI operation (four lines) or clock-synchronous operation (three lines) Capable of handling serial transfer as a master or slave • Data formats Switching between MSB first and LSB first The number of bits in each transfer can be changed to any number of bits from 8 to 16, or to 20, 24, or 32 bits. 128-bit buffers for transmission and reception Up to four frames can be transmitted or received in a single transfer operation (with each frame having up to 32 bits) • Buffered structure Double buffers for both transmission and reception • Max. transfer rate In master mode: [144-, 120-, 112- and 100-pin versions] 25 Mbps [64- and 48-pin versions] 12.5 Mbps In slave mode: 6.25 Mbps
12-bit A/D converter (S12ADB) [144-, 120-, 112- and 100-pin versions]		• 12 bits (4 channels x 2 unit) • 12-bit resolution • Conversion time 1.0 μs per channel (clock for S12ADB, PCLKD (A/D conversion clock ADCLK) = 50 MHz, AVCC0 = 4.0 to 5.5 V) 2.0 μs per channel (clock for S12ADB, PCLKD (A/D conversion clock ADCLK) = 25 MHz, AVCC0 = 3.0 to 3.6 V) • Operating modes Scan mode (single-cycle scan mode/continuous scan mode/group scan mode) Group A priority control (only for the group scan mode) • Sample-and-hold function A common sample-and-hold circuit for units is included. Additionally, sample-and-hold circuit for each unit is included. (three channels per unit) • Self-diagnostic function The self-diagnostic function internally generates three analog input voltages (VREFL0, VREFH0 x 1/2, VREFH0). • Double trigger mode (duplication of A/D converted data) • Input signal amplification function using programmable gain amplifier (three channels per unit) Amplification factors: 2.0 times, 2.5 times, 3.077 times, 3.636 times, 4.0 times, 4.444 times, 5.0 times, 5.714 times, 6.667 times, 10.0 times, 13.333 times (total of 11 steps) • Three ways to start A/D conversion Conversion can be started by software, a conversion start trigger from a timer (MTU3 or GPT), or an external trigger signal. • Window comparators (three channels per unit)

Downloaded from Arrow.com.

Table 1.1 Outline of Specifications (6/7)

Classification Module/Function	Description
12-bit A/D converter (S12ADB) [64- and 48-pin versions]	• 12 bits (8 channels x 1 unit) • 12-bit resolution • Conversion time 1.0 µs per channel (S12ADB clock: PCLKD (A/D conversion clock: ADCLK) = 50 MHz • Operating modes Scan mode (single scan mode / continuous scan mode / group scan mode) Group A priority control (group scan mode only) • Sample-and-hold function A common sample-and-hold circuit for units is included Separate sample-and-hold circuits are also included (three channels per unit) • Self-diagnosis function Three analog input voltages (VREFL0, VREFH0 × 1/2, VREFH0) can be generated internally by the self-diagnosis function. • Double trigger mode (double the results of A/D conversion) • Three ways to start A/D conversion Conversion can be started by software, a conversion start trigger from a timer (MTU3 or GPT), or an external trigger signal. • Window comparators (three channels per unit)
10-bit A/D converter (ADA)	10 bits (20 channels × 1 unit) • 10-bit resolution • Conversion time 0.5 µs per channel (A/D conversion clock ADCLK = 100 MHz) • Two operating modes Single mode, scan mode • Scan mode Single-cycle scan mode Continuous scan mode • Sample-and-hold function A common sample-and-hold circuit for units is included • Three ways to start A/D conversion Conversion can be started by software, a conversion start trigger from a timer (MTU3 or GPT), or an external trigger signal. • 8-bit precision output 2-bit right shifting for output of conversion results is selectable. • Self-diagnostic function The self-diagnostic function internally generates three analog input voltages (AVSS, VREF x 1/2, VREF)
D/A converter (DAa)	• 2 channels • 10-bit resolution • Output voltage: 0 V to VREF
CRC calculator (CRC)	• CRC code generation for arbitrary amounts of data in 8-bit units • Select any of three generating polynomials: $X^8 + X^2 + X + 1$, $X^{16} + X^{15} + X^2 + 1$, or $X^{16} + X^{12} + X^5 + 1$. • Generation of CRC codes for use with LSB-first or MSB-first communications is selectable
Data operating circuit (DOC)	• Comparison, addition, and subtraction of 16-bit data
Digital power supply controller (DPC)	• Control parameters calculation unit of the digital switch-mode power supply systems. • Adopt robust control algorithm with high control stability • Results of measurement by the 10-bit A/D converter can be used in calculating the control parameters.
Operating frequency	Up to 100 MHz
Power supply voltage [144-, 120-, 112- and 100-pin versions]	• 3-V product VCC = PLLVCC = VCC_USB = 2.7 to 3.6 V AVCC0 = AVCC = VREF = 3.0 to 3.6 V, or 4.0 to 5.5 V VREFH0 = 3.0 to AVCC0, or 4.0 to AVCC0 • 5-V product VCC = PLLVCC = 4.0 to 5.5 V VCC_USB = 3.0 to 3.6 V AVCC0 = AVCC = VREF = 4.0 to 5.5 V VREFH0 = 4.0 to AVCC0
Power supply voltage [64- and 48-pin versions]	VCC = 2.7 to 3.6 V, AVCC0 = 3.0 to 3.6 V, VREFH0 = 3.0 V to AVCC0

Downloaded from Arrow.com.

Table 1.1 Outline of Specifications (7/7)

Classification	Module/Function	Description
Operating temperature		D version: -40 to +85°C, G version: -40 to +105°C *1
Package		144-pin LQFP (PLQP0144KA-A (20 × 20, 0.5-mm pitch)) 120-pin LQFP (PLQP0120KA-A (16 × 16, 0.5-mm pitch)) 112-pin LQFP (PLQP0112JA-A (20 × 20, 0.65-mm pitch)) 100-pin LQFP (PLQP0100KB-A (14 × 14, 0.5-mm pitch)) 64-pin LQFP (PLQP0064KB-A (10 × 10, 0.5-mm pitch)) 48-pin LQFP (PLQP0048KB-A (07 × 07, 0.5-mm pitch))
On-chip debugging system		• E1 emulator (JTAG and FINE interfaces) • E20 emulator (JTAG interface)

Note 1. Please contact Renesas Electronics sales office for derating of operation under Ta = +85°C to +105°C. Derating is the systematic reduction of load for the sake of improved reliability.

Downloaded from Arrow.com.

Table 1.2 Comparison of Functions for Different Packages

Functions			RX63T Group					
Package			**144 Pins**	**120 Pins**	**112 Pins**	**100 Pins**	**64 Pins**	**48 Pins**
External bus			16 bits				—	
External address space			1 Mbyte × 4 areas				—	
DMA	DMA controller (DMACA)		Ch. 0 to 3					
	Data transfer controller (DTCa)		Supported					
Interrupt controller (ICUb)	NMI pin		Supported					
	IRQ pin		Supported (x 8)				Supported (x 6)	
Timers	Multi-function timer pulse unit 3 (MTU3)*1		Ch. 0 to 7					
	General PWM timer (GPT)*1	Generation of delays in PWM, not supported	Ch. 0 to 7				Ch. 0 to 3	
		Generation of delays in PWM, supported	Ch. 0 to 3				—	
	Port output enable 3 (POE3)		Supported (POE pins × 6)			Supported (POE pins × 5)	Supported (POE pins × 4)	
	Compare match timer (CMT)		Ch. 0 to 3					
	Watchdog timer (WDTA)		Supported					
	Independent watchdog timer (IWDTa)		Supported					
Communication function	USB2.0 host/function module (USBa)		Ch. 0		—			
	Serial communications interfaces (SCIc)		Ch. 0 to 3			Ch. 0 to 2	Ch. 0, 1	
	Serial communications interfaces (SCId)		Ch. 12					
	I^2C bus interfaces (RIIC)		Ch. 0, 1		Ch. 0			
	Serial peripheral interfaces (RSPI)		Ch. 0, 1				Ch. 0	
	CAN module (CAN) (as an optional function)*1		Ch. 0				—	
12-bit A/D converter (S12ADB)			4 channels × 2 units				8 channels × 1 unit (AN000 to 007)	8 channels × 1 unit (AN000 to 004, 007)
	Three-channel simultaneous sampling function		2 units				1 unit	
	Programmable gain amplifier		3 channels × 2 units				—	
	Window comparator		3 channels × 2 units				3 channels × 1 unit	
10-bit A/D converter (ADA)			20 channels	12 channels			—	
D/A converter (DAa)			Ch. 0, 1				—	
Clock Frequency Accuracy Measurement Circuit			Supported					
Digital power supply controller (DPC)*2			Supported				Not supported	

Note 1. For the MTU3 and GPT, the number of pins will differ with the package. See the list of pins and pin functions for details. In addition, the CAN module is an optional function. For details, see Table 1.3.

Note 2. Not provided for the product ID code O.

Downloaded from Arrow.com.

1.2 List of Products

Table 1.3 is a list of products, and Figure 1.1 shows how to read the product part number.

Table 1.3 List of Products (1/4)

Group	Part No.	Order Part No.	Package	On-chip ROM Capacity	On-chip RAM Capacity	Option	Operating Voltage	Operating Temperature
RX63T	R5F563TEADFB	R5F563TEADFB#V0	PLQP0144KA-A	512 Kbytes	48 Kbytes	CAN module included	VCC/ PLLVCC 4.0 to 5.5V VCC_USB 3.0 to 3.6V AVCC/ AVCC0 4.0 to 5.5V	-40 to +85°C (D Version)
	R5F563TEADFB	R5F563TEADFB#V1	PLQP0144KA-A	512 Kbytes	48 Kbytes	CAN module included		
	R5F563TEADFA	R5F563TEADFA#V0	PLQP0120KA-A	512 Kbytes	48 Kbytes	CAN module included		
	R5F563TEADFA	R5F563TEADFA#V1	PLQP0120KA-A	512 Kbytes	48 Kbytes	CAN module included		
	R5F563TEADFH	R5F563TEADFH#V0	PLQP0112JA-A	512 Kbytes	48 Kbytes	CAN module included		
	R5F563TEADFH	R5F563TEADFH#V1	PLQP0112JA-A	512 Kbytes	48 Kbytes	CAN module included		
	R5F563TEADFP	R5F563TEADFP#V0	PLQP0100KB-A	512 Kbytes	48 Kbytes	CAN module included		
	R5F563TEADFP	R5F563TEADFP#V1	PLQP0100KB-A	512 Kbytes	48 Kbytes	CAN module included		
	R5F563TCADFB	R5F563TCADFB#V0	PLQP0144KA-A	384 Kbytes	32 Kbytes	CAN module included		
	R5F563TCADFB	R5F563TCADFB#V1	PLQP0144KA-A	384 Kbytes	32 Kbytes	CAN module included		
	R5F563TCADFA	R5F563TCADFA#V0	PLQP0120KA-A	384 Kbytes	32 Kbytes	CAN module included		
	R5F563TCADFA	R5F563TCADFA#V1	PLQP0120KA-A	384 Kbytes	32 Kbytes	CAN module included		
	R5F563TCADFH	R5F563TCADFH#V0	PLQP0112JA-A	384 Kbytes	32 Kbytes	CAN module included		
	R5F563TCADFH	R5F563TCADFH#V1	PLQP0112JA-A	384 Kbytes	32 Kbytes	CAN module included		
	R5F563TCADFP	R5F563TCADFP#V0	PLQP0100KB-A	384 Kbytes	32 Kbytes	CAN module included		
	R5F563TCADFP	R5F563TCADFP#V1	PLQP0100KB-A	384 Kbytes	32 Kbytes	CAN module included		
	R5F563TBADFB	R5F563TBADFB#V0	PLQP0144KA-A	256 Kbytes	24 Kbytes	CAN module included		
	R5F563TBADFB	R5F563TBADFB#V1	PLQP0144KA-A	256 Kbytes	24 Kbytes	CAN module included		
	R5F563TBADFA	R5F563TBADFA#V0	PLQP0120KA-A	256 Kbytes	24 Kbytes	CAN module included		
	R5F563TBADFA	R5F563TBADFA#V1	PLQP0120KA-A	256 Kbytes	24 Kbytes	CAN module included		
	R5F563TBADFH	R5F563TBADFH#V0	PLQP0112JA-A	256 Kbytes	24 Kbytes	CAN module included		
	R5F563TBADFH	R5F563TBADFH#V1	PLQP0112JA-A	256 Kbytes	24 Kbytes	CAN module included		
	R5F563TBADFP	R5F563TBADFP#V0	PLQP0100KB-A	256 Kbytes	24 Kbytes	CAN module included		
	R5F563TBADFP	R5F563TBADFP#V1	PLQP0100KB-A	256 Kbytes	24 Kbytes	CAN module included		
	R5F563TEDDFB	R5F563TEDDFB#V0	PLQP0144KA-A	512 Kbytes	48 Kbytes	CAN module not included		
	R5F563TEDDFA	R5F563TEDDFA#V0	PLQP0120KA-A	512 Kbytes	48 Kbytes	CAN module not included		
	R5F563TEDDFH	R5F563TEDDFH#V0	PLQP0112JA-A	512 Kbytes	48 Kbytes	CAN module not included		
	R5F563TEDDFP	R5F563TEDDFP#V0	PLQP0100KB-A	512 Kbytes	48 Kbytes	CAN module not included		

Downloaded from Arrow.com.

Table 1.3 List of Products (2/4)

Group	Part No.	Order Part No.	Package	On-chip ROM Capacity	On-chip RAM Capacity	Option	Operating Voltage	Operating Temperature
RX63T	R5F563TCDDFB	R5F563TCDDFB#V0	PLQP0144KA-A	384 Kbytes	32 Kbytes	CAN module not included	VCC/ PLLVCC 4.0 to 5.5V VCC_USB 3.0 to 3.6V AVCC/ AVCC0 4.0 to 5.5V	-40 to +85°C (D Version)
	R5F563TCDDFA	R5F563TCDDFA#V0	PLQP0120KA-A	384 Kbytes	32 Kbytes	CAN module not included		
	R5F563TCDDFH	R5F563TCDDFH#V0	PLQP0112JA-A	384 Kbytes	32 Kbytes	CAN module not included		
	R5F563TCDDFP	R5F563TCDDFP#V0	PLQP0100KB-A	384 Kbytes	32 Kbytes	CAN module not included		
	R5F563TBDDFB	R5F563TBDDFB#V0	PLQP0144KA-A	256 Kbytes	24 Kbytes	CAN module not included		
	R5F563TBDDFA	R5F563TBDDFA#V0	PLQP0120KA-A	256 Kbytes	24 Kbytes	CAN module not included		
	R5F563TBDDFH	R5F563TBDDFH#V0	PLQP0112JA-A	256 Kbytes	24 Kbytes	CAN module not included		
	R5F563TBDDFP	R5F563TBDDFP#V0	PLQP0100KB-A	256 Kbytes	24 Kbytes	CAN module not included		
	R5F563TEBDFB	R5F563TEBDFB#V0	PLQP0144KA-A	512 Kbytes	48 Kbytes	CAN module included	VCC/ PLLVCC/ VCC_USB 2.7 to 3.6V AVCC/ AVCC0 3.0 to 3.6V or 4.0 to 5.5V	
	R5F563TEBDFB	R5F563TEBDFB#V1	PLQP0144KA-A	512 Kbytes	48 Kbytes	CAN module included		
	R5F563TEBDFA	R5F563TEBDFA#V0	PLQP0120KA-A	512 Kbytes	48 Kbytes	CAN module included		
	R5F563TEBDFA	R5F563TEBDFA#V1	PLQP0120KA-A	512 Kbytes	48 Kbytes	CAN module included		
	R5F563TEBDFH	R5F563TEBDFH#V0	PLQP0112JA-A	512 Kbytes	48 Kbytes	CAN module included		
	R5F563TEBDFH	R5F563TEBDFH#V1	PLQP0112JA-A	512 Kbytes	48 Kbytes	CAN module included		
	R5F563TEBDFP	R5F563TEBDFP#V0	PLQP0100KB-A	512 Kbytes	48 Kbytes	CAN module included		
	R5F563TEBDFP	R5F563TEBDFP#V1	PLQP0100KB-A	512 Kbytes	48 Kbytes	CAN module included		
	R5F563TCBDFB	R5F563TCBDFB#V0	PLQP0144KA-A	384 Kbytes	32 Kbytes	CAN module included		
	R5F563TCBDFB	R5F563TCBDFB#V1	PLQP0144KA-A	384 Kbytes	32 Kbytes	CAN module included		
	R5F563TCBDFA	R5F563TCBDFA#V0	PLQP0120KA-A	384 Kbytes	32 Kbytes	CAN module included		
	R5F563TCBDFA	R5F563TCBDFA#V1	PLQP0120KA-A	384 Kbytes	32 Kbytes	CAN module included		
	R5F563TCBDFH	R5F563TCBDFH#V0	PLQP0112JA-A	384 Kbytes	32 Kbytes	CAN module included		
	R5F563TCBDFH	R5F563TCBDFH#V1	PLQP0112JA-A	384 Kbytes	32 Kbytes	CAN module included		
	R5F563TCBDFP	R5F563TCBDFP#V0	PLQP0100KB-A	384 Kbytes	32 Kbytes	CAN module included		
	R5F563TCBDFP	R5F563TCBDFP#V1	PLQP0100KB-A	384 Kbytes	32 Kbytes	CAN module included		
	R5F563TBBDFB	R5F563TBBDFB#V0	PLQP0144KA-A	256 Kbytes	24 Kbytes	CAN module included		
	R5F563TBBDFB	R5F563TBBDFB#V1	PLQP0144KA-A	256 Kbytes	24 Kbytes	CAN module included		
	R5F563TBBDFA	R5F563TBBDFA#V0	PLQP0120KA-A	256 Kbytes	24 Kbytes	CAN module included		
	R5F563TBBDFA	R5F563TBBDFA#V1	PLQP0120KA-A	256 Kbytes	24 Kbytes	CAN module included		
	R5F563TBBDFH	R5F563TBBDFH#V0	PLQP0112JA-A	256 Kbytes	24 Kbytes	CAN module included		
	R5F563TBBDFH	R5F563TBBDFH#V1	PLQP0112JA-A	256 Kbytes	24 Kbytes	CAN module included		

Downloaded from Arrow.com.

Table 1.3 List of Products (3/4)

Group	Part No.	Order Part No.	Package	On-chip ROM Capacity	On-chip RAM Capacity	Option	Operating Voltage	Operating Temperature
RX63T	R5F563TBBDFP	R5F563TBBDFP#V0	PLQP0100KB-A	256 Kbytes	24 Kbytes	CAN module included	VCC/ PLLVCC/ VCC_USB 2.7 to 3.6V AVCC/ AVCC0 3.0 to 3.6V or 4.0 to 5.5V	-40 to +85°C (D Version)
	R5F563TBBDFP	R5F563TBBDFP#V1	PLQP0100KB-A	256 Kbytes	24 Kbytes	CAN module included		
	R5F563TEEDFB	R5F563TEEDFB#V0	PLQP0144KA-A	512 Kbytes	48 Kbytes	CAN module not included		
	R5F563TEEDFA	R5F563TEEDFA#V0	PLQP0120KA-A	512 Kbytes	48 Kbytes	CAN module not included		
	R5F563TEEDFH	R5F563TEEDFH#V0	PLQP0112JA-A	512 Kbytes	48 Kbytes	CAN module not included		
	R5F563TEEDFP	R5F563TEEDFP#V0	PLQP0100KB-A	512 Kbytes	48 Kbytes	CAN module not included		
	R5F563TCEDFB	R5F563TCEDFB#V0	PLQP0144KA-A	384 Kbytes	32 Kbytes	CAN module not included		
	R5F563TCEDFA	R5F563TCEDFA#V0	PLQP0120KA-A	384 Kbytes	32 Kbytes	CAN module not included		
	R5F563TCEDFH	R5F563TCEDFH#V0	PLQP0112JA-A	384 Kbytes	32 Kbytes	CAN module not included		
	R5F563TCEDFP	R5F563TCEDFP#V0	PLQP0100KB-A	384 Kbytes	32 Kbytes	CAN module not included		
	R5F563TBEDFB	R5F563TBEDFB#V0	PLQP0144KA-A	256 Kbytes	24 Kbytes	CAN module not included		
	R5F563TBEDFA	R5F563TBEDFA#V0	PLQP0120KA-A	256 Kbytes	24 Kbytes	CAN module not included		
	R5F563TBEDFH	R5F563TBEDFH#V0	PLQP0112JA-A	256 Kbytes	24 Kbytes	CAN module not included		
	R5F563TBEDFP	R5F563TBEDFP#V0	PLQP0100KB-A	256 Kbytes	24 Kbytes	CAN module not included		
	R5F563T6EDFM	R5F563T6EDFM#V0	PLQP0064KB-A	64 Kbytes	8 Kbytes	CAN module not included	VCC/ PLLVCC 2.7 to 3.6V AVCC0 3.0 to 3.6V	
	R5F563T5EDFM	R5F563T5EDFM#V0	PLQP0064KB-A	48 Kbytes	8 Kbytes	CAN module not included		
	R5F563T4EDFM	R5F563T4EDFM#V0	PLQP0064KB-A	32 Kbytes	8 Kbytes	CAN module not included		
	R5F563T6EDFL	R5F563T6EDFL#V0	PLQP0048KB-A	64 Kbytes	8 Kbytes	CAN module not included		
	R5F563T5EDFL	R5F563T5EDFL#V0	PLQP0048KB-A	48 Kbytes	8 Kbytes	CAN module not included		
	R5F563T4EDFL	R5F563T4EDFL#V0	PLQP0048KB-A	32 Kbytes	8 Kbytes	CAN module not included		
	R5F563TEAGFB	R5F563TEAGFB#V1	PLQP0144KA-A	512 Kbytes	48 Kbytes	CAN module included	VCC/ PLLVCC 4.0 to 5.5V VCC_USB 3.0 to 3.6V AVCC/ AVCC0 4.0 to 5.5V	-40 to +105°C (G Version)*1
	R5F563TEAGFA	R5F563TEAGFA#V1	PLQP0120KA-A	512 Kbytes	48 Kbytes	CAN module included		
	R5F563TEAGFH	R5F563TEAGFH#V1	PLQP0112JA-A	512 Kbytes	48 Kbytes	CAN module included		
	R5F563TEAGFP	R5F563TEAGFP#V1	PLQP0100KB-A	512 Kbytes	48 Kbytes	CAN module included		
	R5F563TCAGFB	R5F563TCAGFB#V1	PLQP0144KA-A	384 Kbytes	32 Kbytes	CAN module included		
	R5F563TCAGFA	R5F563TCAGFA#V1	PLQP0120KA-A	384 Kbytes	32 Kbytes	CAN module included		
	R5F563TCAGFH	R5F563TCAGFH#V1	PLQP0112JA-A	384 Kbytes	32 Kbytes	CAN module included		
	R5F563TCAGFP	R5F563TCAGFP#V1	PLQP0100KB-A	384 Kbytes	32 Kbytes	CAN module included		
	R5F563TBAGFB	R5F563TBAGFB#V1	PLQP0144KA-A	256 Kbytes	24 Kbytes	CAN module included		

Downloaded from Arrow.com.

Table 1.3 List of Products (4/4)

Group	Part No.	Order Part No.	Package	On-chip ROM Capacity	On-chip RAM Capacity	Option	Operating Voltage	Operating Temperature
RX63T	R5F563TBAGFA	R5F563TBAGFA#V1	PLQP0120KA-A	256 Kbytes	24 Kbytes	CAN module included	VCC/ PLLVCC 4.0 to 5.5V VCC_USB 3.0 to 3.6V AVCC/ AVCC0 4.0 to 5.5V	-40 to +105°C (G Version)*1
	R5F563TBAGFH	R5F563TBAGFH#V1	PLQP0112JA-A	256 Kbytes	24 Kbytes	CAN module included		
	R5F563TBAGFP	R5F563TBAGFP#V1	PLQP0100KB-A	256 Kbytes	24 Kbytes	CAN module included		
	R5F563TEBGFB	R5F563TEBGFB#V1	PLQP0144KA-A	512 Kbytes	48 Kbytes	CAN module included	VCC/ PLLVCC/ VCC_USB 2.7 to 3.6V AVCC/ AVCC0 3.0 to 3.6V or 4.0 to 5.5V	
	R5F563TEBGFA	R5F563TEBGFA#V1	PLQP0120KA-A	512 Kbytes	48 Kbytes	CAN module included		
	R5F563TEBGFH	R5F563TEBGFH#V1	PLQP0112JA-A	512 Kbytes	48 Kbytes	CAN module included		
	R5F563TEBGFP	R5F563TEBGFP#V1	PLQP0100KB-A	512 Kbytes	48 Kbytes	CAN module included		
	R5F563TCBGFB	R5F563TCBGFB#V1	PLQP0144KA-A	384 Kbytes	32 Kbytes	CAN module included		
	R5F563TCBGFA	R5F563TCBGFA#V1	PLQP0120KA-A	384 Kbytes	32 Kbytes	CAN module included		
	R5F563TCBGFH	R5F563TCBGFH#V1	PLQP0112JA-A	384 Kbytes	32 Kbytes	CAN module included		
	R5F563TCBGFP	R5F563TCBGFP#V1	PLQP0100KB-A	384 Kbytes	32 Kbytes	CAN module included		
	R5F563TBBGFB	R5F563TBBGFB#V1	PLQP0144KA-A	256 Kbytes	24 Kbytes	CAN module included		
	R5F563TBBGFA	R5F563TBBGFA#V1	PLQP0120KA-A	256 Kbytes	24 Kbytes	CAN module included		
	R5F563TBBGFH	R5F563TBBGFH#V1	PLQP0112JA-A	256 Kbytes	24 Kbytes	CAN module included		
	R5F563TBBGFP	R5F563TBBGFP#V1	PLQP0100KB-A	256 Kbytes	24 Kbytes	CAN module included		
	R5F563T6EGFM	R5F563T6EGFM#V0	PLQP0064KB-A	64 Kbytes	8 Kbytes	CAN module not included	VCC/ PLLVCC 2.7 to 3.6V AVCC0 3.0 to 3.6V	
	R5F563T5EGFM	R5F563T5EGFM#V0	PLQP0064KB-A	48 Kbytes	8 Kbytes	CAN module not included		
	R5F563T4EGFM	R5F563T4EGFM#V0	PLQP0064KB-A	32 Kbytes	8 Kbytes	CAN module not included		
	R5F563T6EGFL	R5F563T6EGFL#V0	PLQP0048KB-A	64 Kbytes	8 Kbytes	CAN module not included		
	R5F563T5EGFL	R5F563T5EGFL#V0	PLQP0048KB-A	48 Kbytes	8 Kbytes	CAN module not included		
	R5F563T4EGFL	R5F563T4EGFL#V0	PLQP0048KB-A	32 Kbytes	8 Kbytes	CAN module not included		

Note: • Orderable part numbers are current as of when this manual was published. Please make sure to refer to the relevant product page on the Renesas website for the latest part numbers.

Note: • The products with the product ID code 1 (ex. R5F563TEADFB#V1) are the revised version to the specification constraints of technical update TX-RX*-A84A / E described.

Note 1. Please contact Renesas Electronics sales office for derating of operation under Ta = +85°C to +105°C. Derating is the systematic reduction of load for the sake of improved reliability.

Downloaded from Arrow.com.

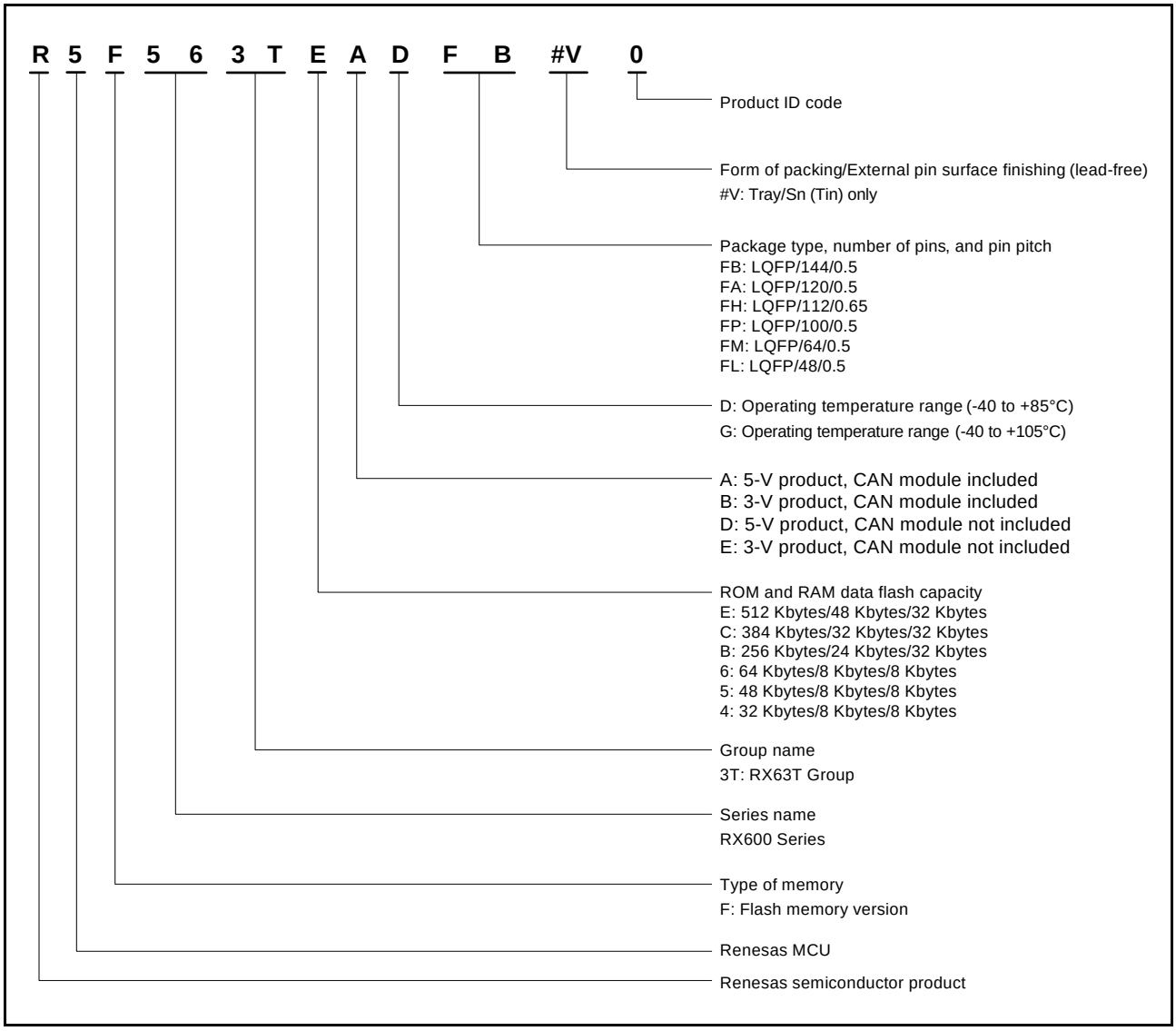

Figure 1.1 How to Read the Product Part Number

Downloaded from Arrow.com.

1.3 Block Diagram

Figure 1.2 shows a block diagram.

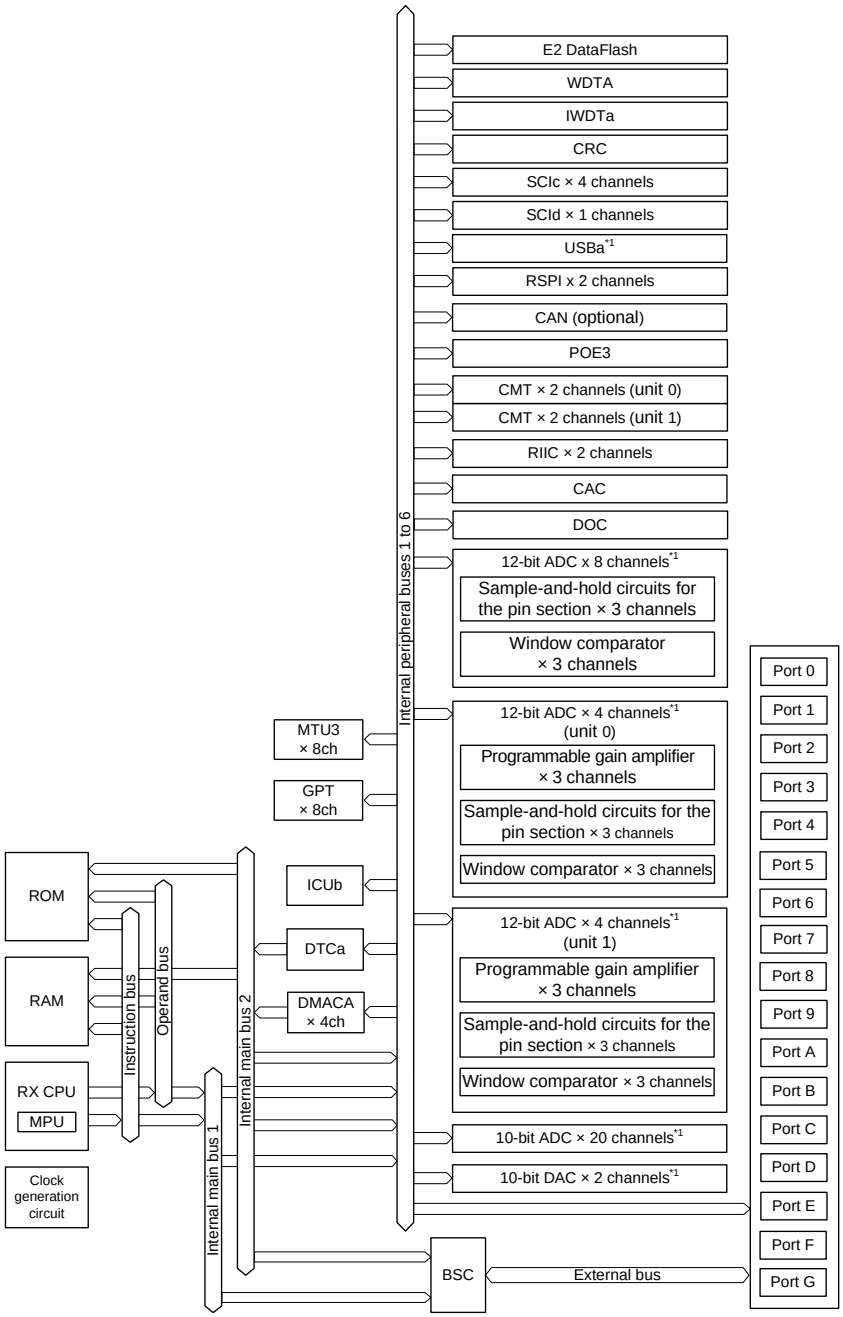

ICUb: Interrupt controller
DTCa: Data transfer controller
DMACA: DMA controller
WDTA: Watchdog timer
IWDTa: Independent watchdog timer
CRC: CRC (cyclic redundancy check) calculator
SCIc, SCId: Serial communications interface
USBa: USB 2.0 host/function module
RSPI: Serial peripheral interface
CAN: CAN module
GPT: General PWM timer
MTU3: Multi-function timer pulse unit 3
POE3: Port output enable 3
CMT: Compare match timer
RIIC: I^2C bus interface
CAC: Clock frequency accuracy measurement circuit
DOC: Data operating circuit
MPU: Memory protection unit

Note 1: Numbers of pins and availability of the USB2.0 host/function module, 12-bit A/D converter, 10-bit D/A converter, and 10-bit D/A converter differ with the package.

Figure 1.2 Block Diagram

Downloaded from Arrow.com.

1.4 Pin Functions

Table 1.4 lists the pin functions.

Table 1.4 Pin Functions (1/5)

Classifications	Pin Name	I/O	Description
Power supply	VCC	—	Power supply pin. Connect it to the system power supply. Connect this pin to VSS via a 0.1-µF capacitor. The capacitor should be placed close to the pin
	VCL	—	Connect this pin to VSS via a 0.1-µF capacitor. The capacitor should be placed close to the pin
	VSS	—	Ground pin. Connect it to the system power supply (0 V)
	PLLVCC	—	Power supply pin. Connect it to the system power supply.
	PLLVSS	—	Ground pin. Connect it to the system power supply (0 V)
Clock	XTAL	Output	Pins for a crystal resonator. An external clock signal can be input through the EXTAL pin
	EXTAL	Input	
	BCLK	Output	Outputs the external bus clock for external devices
Clock frequency accuracy measurement	CACREF	Input	Input for the trigger signal in measuring accuracy of the clock frequency
Operating mode control	MD	Input	Pin for setting the operating mode. The signal levels on these pins must not be changed during operation
System control	RES#	Input	Reset signal input pin. This LSI enters the reset state when this signal goes low
	EMLE	Input	Input pin for the on-chip emulator enable signal. When the on-chip emulator is used, this pin should be driven high. When not used, it should be driven low
On-chip emulator	FINEC	Input	Fine interface clock pin
	FINED	I/O	Fine interface pin
	TRST#	Input	On-chip emulator pins. When the EMLE pin is driven high, these pins are dedicated for the on-chip emulator.
	TMS	Input	
	TDI	Input	
	TCK	Input	
	TDO	Output	
	TRCLK	Output	This pin outputs the clock for synchronization with the trace data
	TRSYNC	Output	This pin indicates that output from the TRDATA0 to TRDATA3 pins is valid
	TRDATA0 to TRDATA3	Output	These pins output the trace information
Address bus	A0 to A19	Output	Output pins for the address
Data bus	D0 to D15	I/O	Input and output pins for the bidirectional data bus
Multiplexed bus	A0/D0 to A15/D15	I/O	Address/data multiplexed bus
Bus control	RD#	Output	Strobe signal which indicates that reading from the external bus interface space is in progress
	WR#	Output	Strobe signal which indicates that writing to the external bus interface space is in progress, in 1-write strobe mode
	WR0# to WR1#	Output	Strobe signals which indicate that either group of data bus pins (D7 to D0 and D15 to D8) is valid in writing to the external bus interface space, in byte strobe mode
	BC0# to BC1#	Output	Strobe signals which indicate that either group of data bus pins (D7 to D0 and D15 to D8) is valid in access to the external bus interface space, in 1-write strobe mode
	ALE	Output	Address latch signal when address/data multiplexed bus is selected
	WAIT#	Input	Input pin for wait request signals in access to the external space
	CS0# to CS3#	Output	Select signals for CS areas

Downloaded from Arrow.com.

Table 1.4 Pin Functions (2/5)

Classifications	Pin Name	I/O	Description
Interrupt	NMI	Input	Non-maskable interrupt request pin
	IRQ0 to IRQ7	Input	Maskable interrupt request pin
Multi-function timer pulse unit 3	MTIOC0A, MTIOC0B MTIOC0C, MTIOC0D	I/O	The TGRA0 to TGRD0 input capture input/output compare output/ PWM output pins
	MTIOC1A, MTIOC1B	I/O	The TGRA1 and TGRB1 input capture input/output compare output/ PWM output pins
	MTIOC2A, MTIOC2B	I/O	The TGRA2 and TGRB2 input capture input/output compare output/ PWM output pins
	MTIOC3A, MTIOC3B MTIOC3C, MTIOC3D	I/O	The TGRA3 to TGRD3 input capture input/output compare output/ PWM output pins
	MTIOC4A, MTIOC4B MTIOC4C, MTIOC4D	I/O	The TGRA4 to TGRD4 input capture input/output compare output/ PWM output pins
	MTIC5U, MTIC5V MTIC5W	Input	The TGRU5, TGRV5, and TGRW5 input capture input/dead time compensation input pins
	MTIOC6A, MTIOC6B MTIOC6C, MTIOC6D	I/O	The TGRA6 to TGRD6 input capture input/output compare output/ PWM output pins
	MTIOC7A, MTIOC7B MTIOC7C, MTIOC7D	I/O	The TGRA7 to TGRD7 input capture input/output compare output/ PWM output pins
	MTCLKA, MTCLKB MTCLKC, MTCLKD	Input	Input pins for external clock
Port output enable 3	POE0#, POE4# POE8#, POE10# POE11#, POE12#	Input	Input pins for request signals to place the MTU/GPT large-current pins in the high impedance state
General PWM timer	GTIOC0A, GTIOC0B	I/O	The GPT0.GTGRA and GPT0.GTGRB input capture input/output compare output/PWM output pins.
	GTIOC1A, GTIOC1B	I/O	The GPT1.GTGRA and GPT1.GTGRB input capture input/output compare output/PWM output pins.
	GTIOC2A, GTIOC2B	I/O	The GPT2.GTGRA and GPT2.GTGRB input capture input/output compare output/PWM output pins.
	GTIOC3A, GTIOC3B	I/O	The GPT3.GTGRA and GPT3.GTGRB input capture input/output compare output/PWM output pins.
	GTETRG0	Input	External trigger input pin for the GPT0 to GPT3
	GTIOC4A, GTIOC4B	I/O	The GPT4.GTGRA and GPT4.GTGRB input capture input/output compare output/PWM output pins.
	GTIOC5A, GTIOC5B	I/O	The GPT5.GTGRA and GPT5.GTGRB input capture input/output compare output/PWM output pins.
	GTIOC6A, GTIOC6B	I/O	The GPT6.GTGRA and GPT6.GTGRB input capture input/output compare output/PWM output pins.
	GTIOC7A, GTIOC7B	I/O	The GPT7.GTGRA and GPT7.GTGRB input capture input/output compare output/PWM output pins.
	GTETRG1	Input	External trigger input pin for the GPT4 to GPT7

Downloaded from Arrow.com.

Table 1.4 Pin Functions (3/5)

Classifications	Pin Name	I/O	Description
Serial communications interface (SCIc)	Asynchronous mode/clock synchronous mode		
	SCK0, SCK1, SCK2, SCK3	I/O	Input/output pins for clock signals.
	RXD0, RXD1, RXD2, RXD3	Input	Input pins for data reception.
	TXD0, TXD1, TXD2, TXD3	Output	Output pins for data transmission.
	CTS0#, CTS1#, CTS2#, CTS3#	Input	Transmit/receive start control input pins
	RTS0#, RTS1#, RTS2#, RTS3#	Output	Transmit/receive start control output pins
	Simple I^2C mode		
	SSCL0, SSCL1, SSCL2, SSCL3	I/O	Input/output pins for the I^2C clock
	SSDA0, SSDA1, SSDA2, SSDA3	I/O	Input/output pins for the I^2C data
	Simple SPI mode		
	SCK0, SCK1, SCK2, SCK3	I/O	Input/output pins for the clock
	SMISO0, SMISO1, SMISO2, SMISO3	I/O	Input/output pins for slave transmit data.
	SMOSI0, SMOSI1, SMOSI2, SMOSI3	I/O	Input/output pins for master transmit data.
	SS0#, SS1#, SS2#, SS3#	Input	Input pins for chip select signals
Serial communications interface (SCId)	Asynchronous mode/clock synchronous mode		
	SCK12	I/O	Input/output pin for clock signals.
	RXD12	Input	Input pin for data reception.
	TXD12	Output	Output pin for data transmission.
	CTS12#	Input	Transmit/receive start control input pins
	RTS12#	Output	Transmit/receive start control output pins
	Simple I^2C mode		
	SSCL12	I/O	Input/output pins for the I^2C clock
	SSDA12	I/O	Input/output pins for the I^2C data
	Simple SPI mode		
	SCK12	I/O	Input/output pins for the clock
	SMISO12	I/O	Input/output pins for slave transmit data.
	SMOSI12	I/O	Input/output pins for master transmit data.
	SS12#	Input	Input pins for chip select signals
	Extended serial mode		
	RXDX12	Input	Input pin for receive data
	TXDX12	Output	Output pin for transmit data
	SIOX12	I/O	Input/output pin for transfer data
I^2C bus interface	SCL, SCL0, SCL1	I/O	Clock input/output pin. N-channel open drain can directly drive buses.
	SDA, SDA0, SDA1	I/O	Data input/output pin. N-channel open drain can directly drive buses.

Downloaded from Arrow.com.

Table 1.4 Pin Functions (4/5)

Classifications	Pin Name	I/O	Description
USB 2.0 host/function module	VCC_USB	Input	Power supply pin for USB
	VSS_USB	Input	Ground pin for USB
	USB0_DP	I/O	USB internal transceiver D + input and output pins
	USB0_DM	I/O	USB internal transceiver D - input and output pins
	USB0_EXICEN	Output	Low power control signal for OTG chip
	USB0_VBUSEN	Output	Supply enable signal of VBUS (5 V) to OTG chip
	USB0_ID	Input	Mini AB connector ID input pin for use in OTG operation
	USB0_DPRPD	Output	D+ signal pull-down control pin for use during host operation
	USB0_DRPD	Output	D- signal pull-down control pin for use during host operation
	USB0_DPUPE	Output	D+ signal pull-up control pin for use during function operation
	USB0_VBUS	Input	Pin for monitoring USB cable connection
	USB0_OVRCURA, USB0_OVRCURB	Input	Pin for detecting external over current
CAN module	CRX1	Input	Input pins
	CTX1	Output	Output pins
Serial peripheral interface	RSPCKA, RSPCKB	I/O	Clock input/output pins
	MOSIA, MOSIB	I/O	Inputs or outputs data output from the master
	MISOA, MISOB	I/O	Inputs or outputs data output from the slave
	SSLA0, SSLB0	I/O	Input or output pins for slave selection
	SSLA1 to SSLA3 SSLB1 to SSLB3	Output	Output pins for slave selection
12-bit A/D converter	AN000 to AN007 AN100 to AN103	Input	Input pins for the analog signals to be processed by the A/D converter
	ADTRG0#, ADTRG1#	Input	Input pins for the external trigger signals that start the A/D conversion
	CVREFH	Input	Input pin for the high-level reference voltage to the comparator
	CVREFL	Input	Input pin for the low-level reference voltage to the comparator
10-bit A/D converter	AN0 to AN19	Input	Input pins for the analog signals to be processed by the 10-bit A/D converter
	ADTRG#	Input	Input pins for the external trigger signals that start the A/D conversion
D/A converter	DA0, DA1	Output	Output pins for the analog signals to be processed by the 10-bit A/D converter
Analog power supply	AVCC0	—	Analog voltage supply pin for the 12-bit A/D converter. Connect this pin to VCC if the 12-bit A/D converter is not to be used
	AVSS0	—	Analog ground pin for the 12-bit A/D converter. Connect this pin to VSS if the 12-bit A/D converter is not to be used
	VREFH0	—	Reference voltage supply pin for the 12-bit A/D converter. Connect this pin to VCC if the 12-bit A/D converter is not to be used
	VREFL0	—	Reference ground pin for the 12-bit A/D converter. Connect this pin to VSS if the 12-bit A/D converter is not to be used
	AVCC	—	Analog voltage supply pin for the 10-bit A/D converter and the 10-bit D/A converter. Connect this pin to the power supply of the system if the A/D converter and the D/A converter are not to be used.
	AVSS	—	Ground pin for the 10-bit A/D converter and 10-bit D/A converter. Connect this pin to the power-supply ground for the system (0 V).
	VREF	—	Reference-voltage input pin for the 10-bit A/D converter and the 10-bit D/A converter. Connect this pin to the power supply for the system if the A/D converter and the D/A converter are not to be used.

Downloaded from Arrow.com.

Table 1.4 Pin Functions (5/5)

Classifications	Pin Name	I/O	Description
I/O ports	P00 to P05	I/O	6-bit input/output pins
	P10 to P14	I/O	5-bit input/output pins
	P20 to P26	I/O	7-bit input/output pins
	P30 to P35	I/O	6-bit input/output pins
	P40 to P47	Input	8-bit input pins
	P50 to P57	Input	8-bit input pins
	P60 to P65	Input	6-bit input pins
	P70 to P76	I/O	7-bit input/output pins
	P80 to P82	I/O	3-bit input/output pins
	P90 to P96	I/O	7-bit input/output pins
	PA0 to PA6	I/O	7-bit input/output pins
	PB0 to PB7	I/O	8-bit input/output pins
	PC0 to PC5	Input	6-bit input pins
	PD0 to PD7	I/O	8-bit input/output pins
	PE0, PE1, PE3 to PE5	I/O	6-bit input/output pins
	PE2	Input	1-bit input pin
	PF0 to PF4	I/O	5-bit input/output pins
	PG0 to PG6	I/O	7-bit input/output pins

Downloaded from Arrow.com.

1.5 Pin Assignments

Figure 1.3 to Figure 1.8 show the pin assignments. Table 1.5 to Table 1.10 show the lists of pins and pin functions.

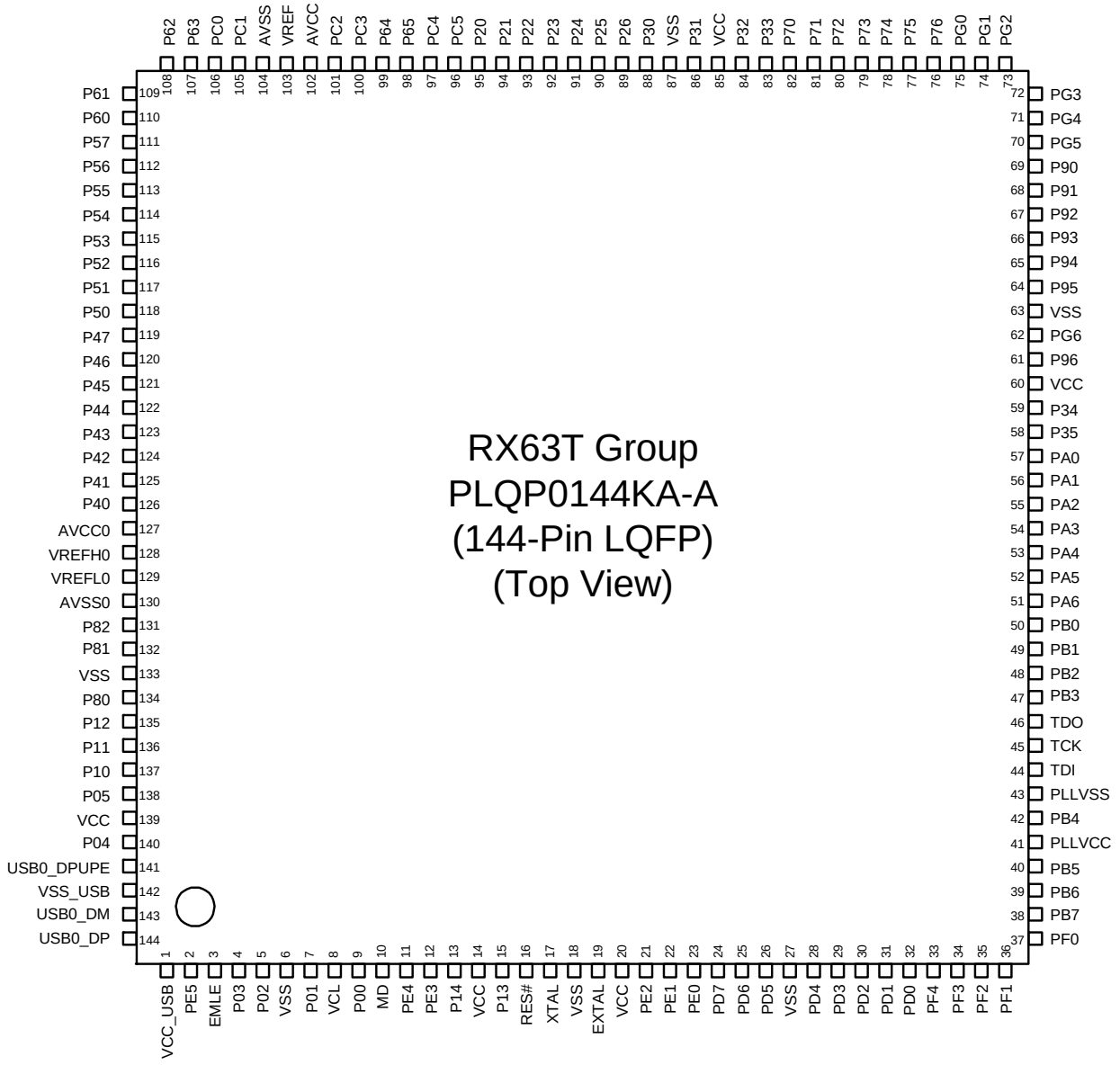

Note: • This figure indicates the power supply pins and I/O port pins. For the pin configuration, see Table 1.5, List of Pins and Pin Functions (144-Pin LQFP).

Figure 1.3 Pin Assignment (144-Pin LQFP)

Downloaded from Arrow.com.

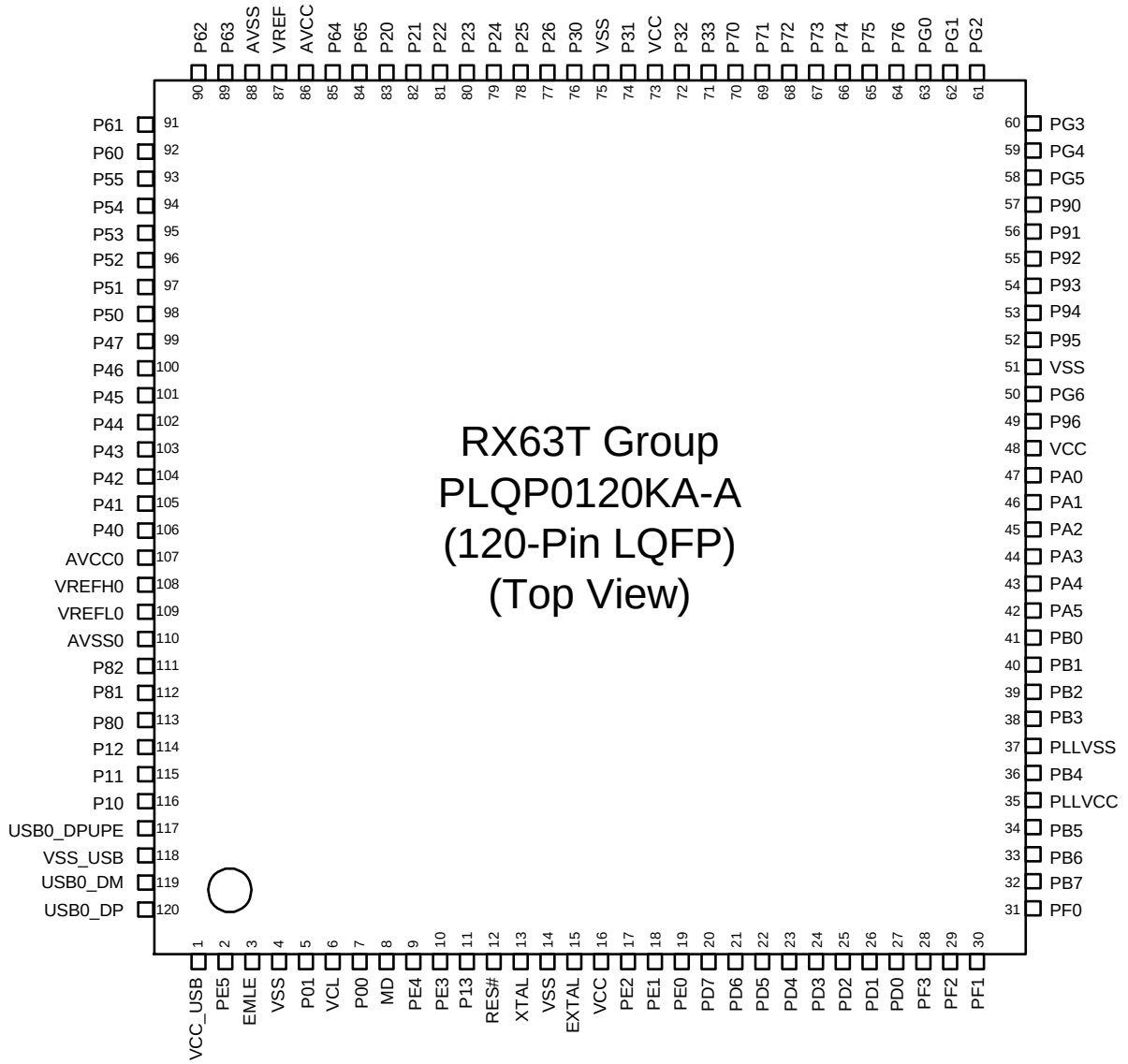

Note: • This figure indicates the power supply pins and I/O port pins. For the pin configuration, see Table 1.6, List of Pins and Pin Functions (120-Pin LQFP).

Figure 1.4 Pin Assignment (120-Pin LQFP)

Downloaded from Arrow.com.

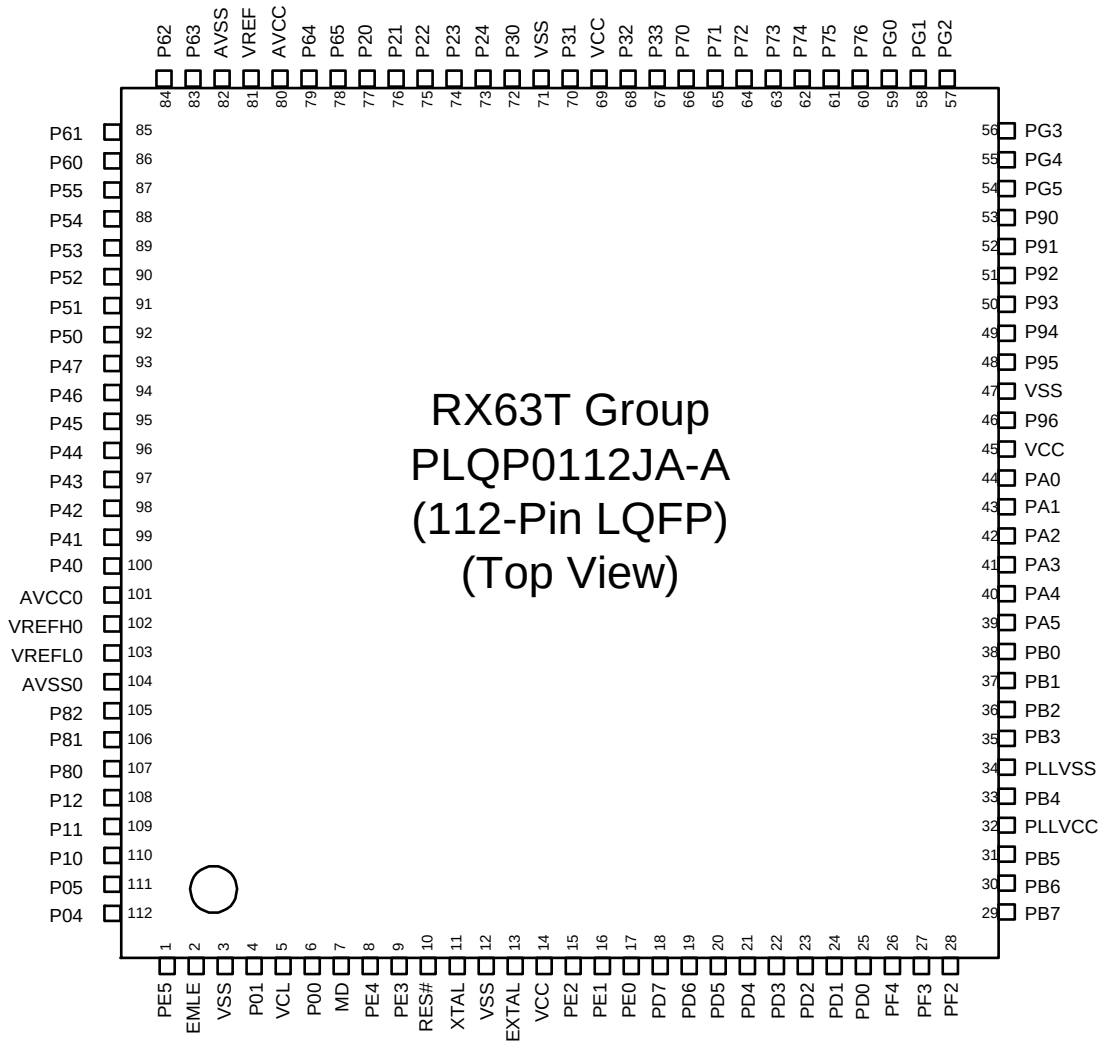

Note: • This figure indicates the power supply pins and I/O port pins. For the pin configuration, see Table 1.7, List of Pins and Pin Functions (112-Pin LQFP).

Figure 1.5 Pin Assignment (112-Pin LQFP)

Downloaded from Arrow.com.

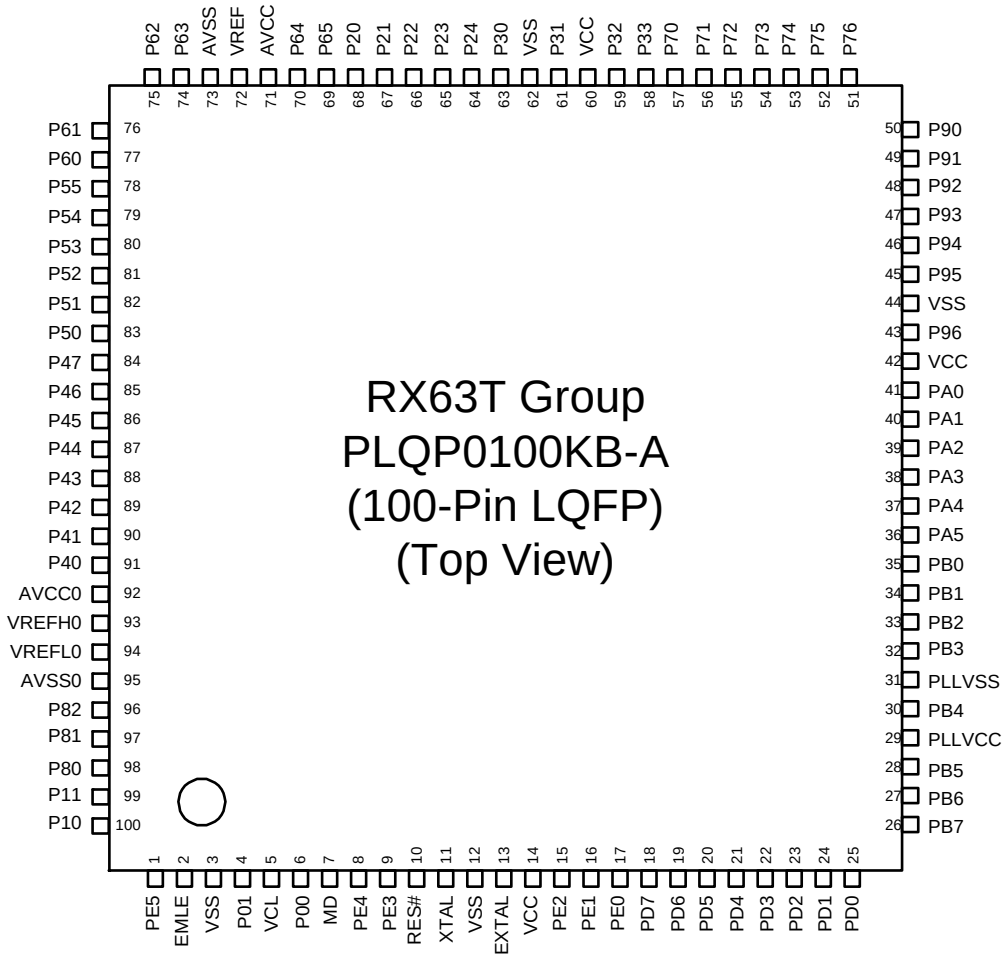

Note: • This figure indicates the power supply pins and I/O port pins. For the pin configuration, see Table 1.8, List of Pins and Pin Functions (100-Pin LQFP).

Figure 1.6 Pin Assignment (100-Pin LQFP)

Downloaded from Arrow.com.

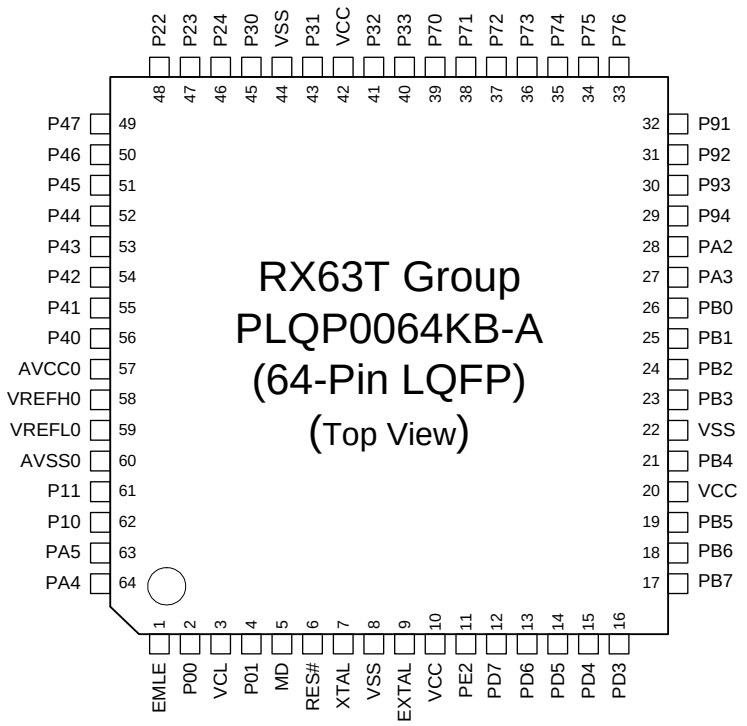

Note: • This figure indicates the power supply pins and I/O port pins. For the pin configuration, see Table 1.9, List of Pins and Pin Functions (64-Pin LQFP).

Figure 1.7 Pin Assignment (64-Pin LQFP)

Downloaded from Arrow.com.

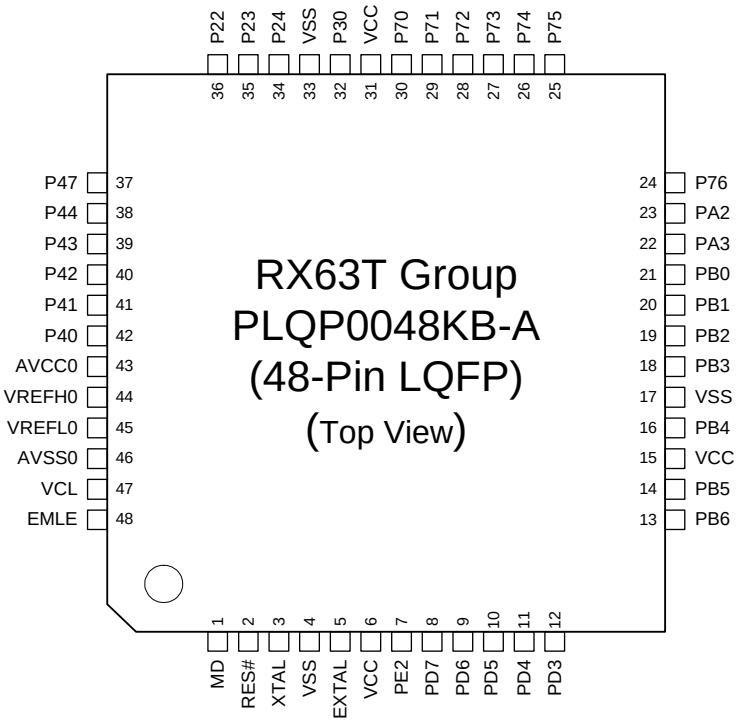

Note: • This figure indicates the power supply pins and I/O port pins. For the pin configuration, see Table 1.10, List of Pins and Pin Functions (48-Pin LQFP).

Figure 1.8 Pin Assignment (48-Pin LQFP)

Downloaded from Arrow.com.

Table 1.5 List of Pins and Pin Functions (144-Pin LQFP) (1/4)

Pin Number 144-Pin LQFP	Power Supply Clock System Control	I/O Port	Bus	Timer (MTU3, GPT, POE3, CAC)	Communications (SCIc, SCId, RSPI, RIIC, CAN, USB)	Interrupt	S12ADB, AD, DA
1	VCC_USB						
2		PE5	BCLK		USB0_VBUS	IRQ0	
3	EMLE						
4	TRSYNC	P03			RXD2/SMISO2/SSCL2	IRQ7	
5	TRDATA3	P02			TXD2/SMOSI2/SSDA2		
6	VSS						
7		P01	RD#		CTS0#/RTS0#/SS0#/ USB0_DRPD		
8	VCL						
9		P00	CS1#	CACREF			
10	MD/FINED						
11		PE4	A10	POE10#/MTCLKC		IRQ1	
12		PE3	A11	POE11#/MTCLKD		IRQ2-DS	
13	TRDATA2	P14			SCK2		
14	VCC						
15		P13			CTS2#/RTS2#/SS2#/ USB0_VBUSEN		
16	RES#						
17	XTAL						
18	VSS						
19	EXTAL						
20	VCC						
21		PE2		POE10#		NMI	
22		PE1	WR0#/WR#		CTS12#/RTS12#/ SS12#/SSLA3/SSLB3/ USB0_OVRCURA		
23		PE0	WR1#/BC1#/ WAIT#		SSLA2/SSLB2/CRX1/ USB0_OVRCURB	IRQ7	
24		PD7		GTIOC0A	CTS0#/RTS0#/SS0#/ SSLA1/SSLB1/CTX1		
25		PD6		GTIOC0B	SSLA0/SSLB0		
26		PD5		GTIOC1A	RXD1/SMISO1/SSCL1	IRQ6	
27	VSS						
28		PD4		GTIOC1B	SCK1		
29		PD3		GTIOC2A	TXD1/SMOSI1/SSDA1		
30		PD2	CS2#	GTIOC2B	MOSIA/MOSIB/ USB0_ID		
31		PD1	CS0#	GTIOC3A	MISOA/MISOB/ USB0_EXICEN		
32		PD0	A12	GTIOC3B	RSPCKA/RSPCKB		
33		PF4	CS3#				
34		PF3			TXD1/SMOSI1/SSDA1		
35		PF2	CS1#		RXD1/SMISO1/SSCL1	IRQ5	
36	TRST#	PF1					
37	TMS	PF0					
38		PB7	A19		SCK12		

Downloaded from Arrow.com.

Table 1.5 List of Pins and Pin Functions (144-Pin LQFP) (2/4)

Pin Number 144-Pin LQFP	Power Supply Clock System Control	I/O Port	Bus	Timer (MTU3, GPT, POE3, CAC)	Communications (SCIc, SCId, RSPI, RIIC, CAN, USB)	Interrupt	S12ADB, AD, DA
39		PB6	A18		RXD12/SMISO12/ SSCL12/RXDX12/ CRX1	IRQ2	
40		PB5	A17		TXD12/SMOSI12/ SSDA12/TXDX12/ SIOX12/ CTX1		
41	PLLVCC						
42		PB4	A16	POE8#/ GTETRG0		IRQ3-DS	
43	PLLVSS						
44	TDI				RXD1*1		
45	TCK/FINEC						
46	TDO				TXD1*1		
47		PB3	A15	MTIOC0A/CACREF	SCK0		
48		PB2		MTIOC0B	TXD0/SMOSI0/ SSDA0/SDA0		
49		PB1		MTIOC0C	RXD0/SMISO0/ SSCL0/SCL0	IRQ4	
50		PB0	A14	MTIOC0D	MOSIA/MOSIB		
51	TRDATA1	PA6	CS3#		CTS3#/RTS3#/SS3#		
52		PA5		MTIOC1A	RXD0/SMISO0/ SSCL0/ MISOA/MISOB		ADTRG1#
53		PA4		MTIOC1B	TXD0/SMOSI0/ SSDA0/SMOSI0/ RSPCKA/RSPCKB		ADTRG0#
54		PA3		MTIOC2A	SCK0/SSLA0/SSLB0		
55		PA2		MTIOC2B	RXD2/SMISO2/ SSCL2/ SSLA1/SSLB1		
56		PA1		MTIOC6A	TXD2/SMOSI2/ SSDA2/SMOSI2/ SSLA2/SSLB2		
57		PA0		MTIOC6C	SCK2/SSLA3/SSLB3		
58	TRDATA0	P35			TXD3/SMOSI3/SSDA3		
59	TRCLK	P34		GTETRG1	RXD3/SMISO3/SSCL3	IRQ3	
60	VCC						
61		P96	A13	POE4#	RXD1/SMISO1/SSCL1	IRQ4-DS	
62		PG6	CS2#		SCK1		
63	VSS						
64		P95		MTIOC6B/GTIOC4A	TXD1/SMOSI1/SSDA1		
65		P94		MTIOC7A/GTIOC5A	CTS1#/RTS1#/SS1#		
66		P93		MTIOC7B/GTIOC6A	CTS2#/RTS2#/SS2#		
67		P92		MTIOC6D/GTIOC4B			
68		P91		MTIOC7C/GTIOC5B			
69		P90		MTIOC7D/GTIOC6B			
70		PG5		POE12#	SCK3		ADTRG#
71		PG4		GTIOC6B	RXD3/SMISO3/SSCL3	IRQ6	

Downloaded from Arrow.com.

Table 1.5 List of Pins and Pin Functions (144-Pin LQFP) (3/4)

Pin Number 144-Pin LQFP	Power Supply Clock System Control	I/O Port	Bus	Timer (MTU3, GPT, POE3, CAC)	Communications (SCIc, SCId, RSPI, RIIC, CAN, USB)	Interrupt	S12ADB, AD, DA
72		PG3		GTIOC6A	TXD3/SMOSI3/SSDA3		
73		PG2			SCK2	IRQ2	
74		PG1		GTIOC7B	RXD2/SMISO2/SSCL2	IRQ1	
75		PG0		GTIOC7A	TXD2/SMOSI2/SSDA2	IRQ0	
76		P76	D0/[A0/D0]	MTIOC4D/GTIOC2B			
77		P75	D1/[A1/D1]	MTIOC4C/GTIOC1B			
78		P74	D2/[A2/D2]	MTIOC3D/GTIOC0B			
79		P73	D3/[A3/D3]	MTIOC4B/GTIOC2A			
80		P72	D4/[A4/D4]	MTIOC4A/GTIOC1A			
81		P71	D5/[A5/D5]	MTIOC3B/GTIOC0A			
82		P70	D6/[A6/D6]	POE0#	CTS1#/RTS1#/SS1#	IRQ5-DS	
83		P33	D7/[A7/D7]	MTIOC3A/MTCLKA	SSLA3/SSLB3		
84		P32	D8/[A8/D8]	MTIOC3C/MTCLKB	SSLA2/SSLB2		
85	VCC						
86		P31	D9/[A9/D9]	MTIOC0A/MTCLKC	SSLA1/SSLB1		
87	VSS						
88		P30	D10/[A10/D10]	MTIOC0B/MTCLKD	SCK0/SSLA0/SSLB0		
89		P26	CS0#		TXD1/SMOSI1/SSDA1/SDA1		
90		P25	CS1#		SCK1/SCL1		
91		P24	D11/[A11/D11]		CTS0#/RTS0#/SS0#/RSPCKA/RSPCKB	IRQ4	
92		P23	D12/[A12/D12]	CACREF	TXD0/SMOSI0/SSDA0/MOSIA/MOSIB/CTX1		
93		P22	D13/[A13/D13]		RXD0/SMISO0/SSCL0/MISOA/MISOB/CRX1		ADTRG#
94		P21	D14/[A14/D14]	MTCLKA		IRQ6-DS	ADTRG1#
95		P20	D15/[A15/D15]	MTCLKB		IRQ7-DS	ADTRG0#
96		PC5					AN19
97		PC4					AN18
98		P65	A0/BC0#				AN5
99		P64	A1				AN4
100		PC3					AN17
101		PC2					AN16
102	AVCC						
103	VREF						
104	AVSS						
105		PC1					AN15
106		PC0					AN14
107		P63	A2				AN3
108		P62	A3				AN2
109		P61	A4				AN1

Downloaded from Arrow.com.

Table 1.5 List of Pins and Pin Functions (144-Pin LQFP) (4/4)

Pin Number 144-Pin LQFP	Power Supply Clock System Control	I/O Port	Bus	Timer (MTU3, GPT, POE3, CAC)	Communications (SCIc, SCId, RSPI, RIIC, CAN, USB)	Interrupt	S12ADB, AD, DA
110		P60	A5				AN0
111		P57					AN13
112		P56					AN12
113		P55					AN11/DA1
114		P54					AN10/ DA0
115		P53	A6				AN9
116		P52	A7				AN8
117		P51					AN7
118		P50					AN6
119		P47					AN103/ CVREFH
120		P46					AN102
121		P45					AN101
122		P44					AN100
123		P43					AN003/ CVREFL
124		P42					AN002
125		P41					AN001
126		P40					AN000
127	AVCC0						
128	VREFH0						
129	VREFL0						
130	AVSS0						
131		P82	WAIT#	MTIC5U	SCK12	IRQ3	
132		P81	A8	MTIC5V	TXD12/SMOSI12/ SSDA12/TXDX12/ SIOX12		
133	VSS						
134		P80	A9	MTIC5W	RXD12/SMISO12/ SSCL12/RXDX12	IRQ5	
135		P12	CS3#		USB0_DPRPD		
136		P11	ALE	MTCLKC		IRQ1-DS	
137		P10		MTCLKD		IRQ0-DS	
138		P05	CS2#/WAIT#				
139	VCC						
140		P04					
141					USB0_DPUPE		
142	VSS_USB						
143					USB0_DM		
144					USB0_DP		

Note 1. Available for use as SCI pin only in boot mode.

Downloaded from Arrow.com.

Table 1.6 List of Pins and Pin Functions (120-Pin LQFP) (1/4)

Pin Number 120-Pin LQFP	Power Supply Clock System Control	I/O Port	Bus	Timer (MTU3, GPT, POE3, CAC)	Communications (SCIc, SCId, RSPI, RIIC, CAN, USB)	Interrupt	S12ADB, AD, DA
1	VCC_USB						
2		PE5	BCLK		USB0_VBUS	IRQ0	
3	EMLE						
4	VSS						
5		P01	RD#		CTS0#/RTS0#/SS0#/ USB0_DRPD		
6	VCL						
7		P00	CS1#	CACREF			
8	MD/FINED						
9		PE4	A10	POE10#/MTCLKC		IRQ1	
10		PE3	A11	POE11#/MTCLKD		IRQ2-DS	
11		P13			CTS2#/RTS2#/SS2#/ USB0_VBUSEN		
12	RES#						
13	XTAL						
14	VSS						
15	EXTAL						
16	VCC						
17		PE2		POE10#		NMI	
18		PE1	WR0#/WR#		CTS12#/RTS12#/ SS12#/SSLA3/SSLB3/ USB0_OVRCURA		
19		PE0	WR1#/BC1#/ WAIT#		SSLA2/SSLB2/CRX1/ USB0_OVRCURB	IRQ7	
20	TRST#	PD7		GTIOC0A	CTS0#/RTS0#/SS0#/ SSLA1/SSLB1/CTX1		
21	TMS	PD6		GTIOC0B	SSLA0/SSLB0		
22	TDI	PD5		GTIOC1A	RXD1/SMISO1/SSCL1	IRQ6	
23	TCK/FINEC	PD4		GTIOC1B	SCK1		
24	TDO	PD3		GTIOC2A	TXD1/SMOSI1/SSDA1		
25		PD2	CS2#	GTIOC2B	MOSIA/MOSIB/ USB0_ID		
26		PD1	CS0#	GTIOC3A	MISOA/MISOB/ USB0_EXICEN		
27		PD0	A12	GTIOC3B	RSPCKA/RSPCKB		
28		PF3			TXD1/SMOSI1/SSDA1		
29		PF2	CS1#		RXD1/SMISO1/SSCL1	IRQ5	
30		PF1					
31		PF0					
32		PB7	A19		SCK12		
33		PB6	A18		RXD12/SMISO12/ SSCL12/RXDX12/ CRX1	IRQ2	
34		PB5	A17		TXD12/SMOSI12/ SSDA12/TXDX12/ SIOX12/CTX1		
35	PLLVCC						
36		PB4	A16	POE8#/GTETRG0		IRQ3-DS	

Downloaded from Arrow.com.

Table 1.6 List of Pins and Pin Functions (120-Pin LQFP) (2/4)

Pin Number 120-Pin LQFP	Power Supply Clock System Control	I/O Port	Bus	Timer (MTU3, GPT, POE3, CAC)	Communications (SCIc, SCId, RSPI, RIIC, CAN, USB)	Interrupt	S12ADB, AD, DA
37	PLLVSS						
38		PB3	A15	MTIOC0A/CACREF	SCK0		
39		PB2		MTIOC0B	TXD0/SMOSI0/ SSDA0/SDA0		
40		PB1		MTIOC0C	RXD0/SMISO0/ SSCL0/SCL0	IRQ4	
41		PB0	A14	MTIOC0D	MOSIA/MOSIB		
42		PA5		MTIOC1A	RXD0/SMISO0/ SSCL0/ MISOA/MISOB		ADTRG1#
43		PA4		MTIOC1B	TXD0/SMOSI0/ SSDA0/RSPCKA/ RSPCKB		ADTRG0#
44		PA3		MTIOC2A	SCK0/SSLA0/SSLB0		
45		PA2		MTIOC2B	RXD2/SMISO2/ SSCL2/ SSLA1/SSLB1		
46		PA1		MTIOC6A	TXD2/SMOSI2/ SSDA2/SSLA2/SSLB2		
47		PA0		MTIOC6C	SCK2/SSLA3/SSLB3		
48	VCC						
49		P96	A13	POE4#	RXD1/SMISO1/SSCL1	IRQ4-DS	
50		PG6	CS2#		SCK1		
51	VSS						
52		P95		MTIOC6B/GTIOC4A	TXD1/SMOSI1/SSDA1		
53		P94		MTIOC7A/GTIOC5A	CTS1#/RTS1#/SS1#		
54		P93		MTIOC7B/GTIOC6A	CTS2#/RTS2#/SS2#		
55		P92		MTIOC6D/GTIOC4B			
56		P91		MTIOC7C/GTIOC5B			
57		P90		MTIOC7D/GTIOC6B			
58	TRCLK	PG5		POE12#	SCK3		ADTRG#
59	TRDATA3	PG4		GTIOC6B	RXD3/SMISO3/SSCL3	IRQ6	
60	TRDATA2	PG3		GTIOC6A	TXD3/SMOSI3/SSDA3		
61	TRDATA1	PG2			SCK2	IRQ2	
62	TRDATA0	PG1		GTIOC7B	RXD2/SMISO2/SSCL2	IRQ1	
63	TRSYNC	PG0		GTIOC7A	TXD2/SMOSI2/SSDA2	IRQ0	
64		P76	D0/[A0/D0]	MTIOC4D/GTIOC2B			
65		P75	D1/[A1/D1]	MTIOC4C/GTIOC1B			
66		P74	D2/[A2/D2]	MTIOC3D/GTIOC0B			
67		P73	D3/[A3/D3]	MTIOC4B/GTIOC2A			
68		P72	D4/[A4/D4]	MTIOC4A/GTIOC1A			
69		P71	D5/[A5/D5]	MTIOC3B/GTIOC0A			
70		P70	D6/[A6/D6]	POE0#	CTS1#/RTS1#/SS1#	IRQ5-DS	
71		P33	D7/[A7/D7]	MTIOC3A/MTCLKA	SSLA3/SSLB3		
72		P32	D8/[A8/D8]	MTIOC3C/MTCLKB	SSLA2/SSLB2		
73	VCC						
74		P31	D9/[A9/D9]	MTIOC0A/MTCLKC	SSLA1/SSLB1		

Downloaded from Arrow.com.

Table 1.6 List of Pins and Pin Functions (120-Pin LQFP) (3/4)

Pin Number 120-Pin LQFP	Power Supply Clock System Control	I/O Port	Bus	Timer (MTU3, GPT, POE3, CAC)	Communications (SCIc, SCId, RSPI, RIIC, CAN, USB)	Interrupt	S12ADB, AD, DA
75	VSS						
76		P30	D10/[A10/D10]	MTIOC0B/MTCLKD	SCK0/SSLA0/SSLB0		
77		P26	CS0#		TXD1/SMOSI1/SSDA1/SDA1		
78		P25	CS1#		SCK1/SCL1		
79		P24	D11/[A11/D11]		CTS0#/RTS0#/SS0#/RSPCKA/RSPCKB	IRQ4	
80		P23	D12/[A12/D12]	CACREF	TXD0/SMOSI0/SSDA0/MOSIA/MOSIB/CTX1		
81		P22	D13/[A13/D13]		RXD0/SMISO0/SSCL0/MISOA/MISOB/CRX1		ADTRG#
82		P21	D14/[A14/D14]	MTCLKA		IRQ6-DS	ADTRG1#
83		P20	D15/[A15/D15]	MTCLKB		IRQ7-DS	ADTRG0#
84		P65	A0/BC0#				AN5
85		P64	A1				AN4
86	AVCC						
87	VREF						
88	AVSS						
89		P63	A2				AN3
90		P62	A3				AN2
91		P61	A4				AN1
92		P60	A5				AN0
93		P55					AN11/DA1
94		P54					AN10/DA0
95		P53	A6				AN9
96		P52	A7				AN8
97		P51					AN7
98		P50					AN6
99		P47					AN103/CVREFH
100		P46					AN102
101		P45					AN101
102		P44					AN100
103		P43					AN003/CVREFL
104		P42					AN002
105		P41					AN001
106		P40					AN000
107	AVCC0						
108	VREFH0						
109	VREFL0						
110	AVSS0						

Downloaded from Arrow.com.

Table 1.6 List of Pins and Pin Functions (120-Pin LQFP) (4/4)

Pin Number 120-Pin LQFP	Power Supply Clock System Control	I/O Port	Bus	Timer (MTU3, GPT, POE3, CAC)	Communications (SCIc, SCId, RSPI, RIIC, CAN, USB)	Interrupt	S12ADB, AD, DA
111		P82	WAIT#	MTIC5U	SCK12	IRQ3	
112		P81	A8	MTIC5V	TXD12/SMOSI12/ SSDA12/TXDX12/ SIOX12		
113		P80	A9	MTIC5W	RXD12/SMISO12/ SSCL12/RXDX12	IRQ5	
114		P12	CS3#		USB0_DPRPD		
115		P11	ALE	MTCLKC		IRQ1-DS	
116		P10		MTCLKD		IRQ0-DS	
117					USB0_DPUPE		
118	VSS_USB						
119					USB0_DM		
120					USB0_DP		

Downloaded from Arrow.com.

Table 1.7 List of Pins and Pin Functions (112-Pin LQFP) (1/4)

Pin Number 112-Pin LQFP	Power Supply Clock System Control	I/O Port	Bus	Timer (MTU3, GPT, POE3, CAC)	Communications (SCIc, SCId, RSPI, RIIC, CAN)	Interrupt	S12ADB, AD, DA
1		PE5	BCLK			IRQ0	
2	EMLE						
3	VSS						
4		P01	RD#		CTS0#/RTS0#/SS0#		
5	VCL						
6		P00	CS1#	CACREF			
7	MD/FINED						
8		PE4	A10	POE10#/MTCLKC		IRQ1	
9		PE3	A11	POE11#/MTCLKD		IRQ2-DS	
10	RES#						
11	XTAL						
12	VSS						
13	EXTAL						
14	VCC						
15		PE2		POE10#		NMI	
16		PE1	WR0#/WR#		CTS12#/RTS12#/ SS12#/SSLA3/SSLB3		
17		PE0	WR1#/BC1#/ WAIT#		SSLA2/SSLB2/CRX1	IRQ7	
18		PD7		GTIOC0A	CTS0#/RTS0#/SS0#/ SSLA1/SSLB1/CTX1		
19		PD6		GTIOC0B	SSLA0/SSLB0		
20		PD5		GTIOC1A	RXD1/SMISO1/SSCL1	IRQ6	
21		PD4		GTIOC1B	SCK1		
22		PD3		GTIOC2A	TXD1/SMOSI1/SSDA1		
23		PD2	CS2#	GTIOC2B	MOSIA/MOSIB		
24		PD1	CS0#	GTIOC3A	MISOA/MISOB		
25		PD0	A12	GTIOC3B	RSPCKA/RSPCKB		
26	TDI	PF4	CS3#		RXD1*1		
27	TCK/FINEC	PF3			TXD1/SMOSI1/SSDA1		
28	TDO	PF2	CS1#		RXD1/SMISO1/ SSCL1/TXD1*1	IRQ5	
29		PB7	A19		SCK12		
30		PB6	A18		RXD12/SMISO12/ SSCL12/RXDX12/ CRX1	IRQ2	
31		PB5	A17		TXD12/SMOSI12/ SSDA12/TXDX12/ SIOX12/CTX1		
32	PLLVCC						
33		PB4	A16	POE8#/GTETRG0		IRQ3-DS	
34	PLLVSS						
35		PB3	A15	MTIOC0A/CACREF	SCK0		
36		PB2		MTIOC0B	TXD0/SMOSI0/ SSDA0/SDA0		
37		PB1		MTIOC0C	RXD0/SMISO0/ SSCL0/SCL0	IRQ4	

Downloaded from Arrow.com.

Table 1.7 List of Pins and Pin Functions (112-Pin LQFP) (2/4)

Pin Number 112-Pin LQFP	Power Supply Clock System Control	I/O Port	Bus	Timer (MTU3, GPT, POE3, CAC)	Communications (SCIc, SCId, RSPI, RIIC, CAN)	Interrupt	S12ADB, AD, DA
38		PB0	A14	MTIOC0D	MOSIA/MOSIB		
39		PA5		MTIOC1A	RXD0/SMISO0/ SSCL0/ MISOA/MISOB		ADTRG1#
40		PA4		MTIOC1B	TXD0/SMOSI0/ SSDA0/RSPCKA/ RSPCKB		ADTRG0#
41		PA3		MTIOC2A	SCK0/SSLA0/SSLB0		
42		PA2		MTIOC2B	RXD2/SMISO2/ SSCL2/ SSLA1/SSLB1		
43		PA1		MTIOC6A	TXD2/SMOSI2/ SSDA2/SSLA2/SSLB2		
44		PA0		MTIOC6C	SCK2/SSLA3/SSLB3		
45	VCC						
46		P96	A13	POE4#	RXD1/SMISO1/SSCL1	IRQ4-DS	
47	VSS						
48		P95		MTIOC6B/ GTIOC4A	TXD1/SMOSI1/SSDA1		
49		P94		MTIOC7A/ GTIOC5A	CTS1#/RTS1#/SS1#		
50		P93		MTIOC7B/ GTIOC6A	CTS2#/RTS2#/SS2#		
51		P92		MTIOC6D/GTIOC4B			
52		P91		MTIOC7C/GTIOC5B			
53		P90		MTIOC7D/GTIOC6B			
54	TRCLK	PG5		POE12#	SCK3		ADTRG#
55	TRDATA3	PG4		GTIOC6B	RXD3/SMISO3/SSCL3	IRQ6	
56	TRDATA2	PG3		GTIOC6A	TXD3/SMOSI3/SSDA3		
57	TRDATA1	PG2			SCK2	IRQ2	
58	TRDATA0	PG1		GTIOC7B	RXD2/SMISO2/SSCL2	IRQ1	
59	TRSYNC	PG0		GTIOC7A	TXD2/SMOSI2/SSDA2	IRQ0	
60		P76	D0/[A0/D0]	MTIOC4D/GTIOC2B			
61		P75	D1/[A1/D1]	MTIOC4C/GTIOC1B			
62		P74	D2/[A2/D2]	MTIOC3D/GTIOC0B			
63		P73	D3/[A3/D3]	MTIOC4B/GTIOC2A			
64		P72	D4/[A4/D4]	MTIOC4A/GTIOC1A			
65		P71	D5/[A5/D5]	MTIOC3B/GTIOC0A			
66		P70	D6/[A6/D6]	POE0#	CTS1#/RTS1#/SS1#	IRQ5-DS	
67		P33	D7/[A7/D7]	MTIOC3A/MTCLKA	SSLA3/SSLB3		
68		P32	D8/[A8/D8]	MTIOC3C/MTCLKB	SSLA2/SSLB2		
69	VCC						
70		P31	D9/[A9/D9]	MTIOC0A/MTCLKC	SSLA1/SSLB1		
71	VSS						
72		P30	D10/[A10/ D10]	MTIOC0B/MTCLKD	SCK0/SSLA0/SSLB0		
73		P24	D11/[A11/D11]		CTS0#/RTS0#/SS0#/ RSPCKA/RSPCKB	IRQ4	

Downloaded from Arrow.com.

Table 1.7 List of Pins and Pin Functions (112-Pin LQFP) (3/4)

Pin Number 112-Pin LQFP	Power Supply Clock System Control	I/O Port	Bus	Timer (MTU3, GPT, POE3, CAC)	Communications (SCIc, SCId, RSPI, RIIC, CAN)	Interrupt	S12ADB, AD, DA
74		P23	D12/[A12/ D12]	CACREF	TXD0/SMOSI0/ SSDA0/MOSIA/ MOSIB/CTX1		
75		P22	D13/[A13/ D13]		RXD0/SMISO0/ SSCL0/MISOA/ MISOB/CRX1		ADTRG#
76		P21	D14/[A14/ D14]	MTCLKA		IRQ6-DS	ADTRG1#
77		P20	D15/[A15/ D15]	MTCLKB		IRQ7-DS	ADTRG0#
78		P65	A0/BC0#				AN5
79		P64	A1				AN4
80	AVCC						
81	VREF						
82	AVSS						
83		P63	A2				AN3
84		P62	A3				AN2
85		P61	A4				AN1
86		P60	A5				AN0
87		P55					AN11/DA1
88		P54					AN10/ DA0
89		P53	A6				AN9
90		P52	A7				AN8
91		P51					AN7
92		P50					AN6
93		P47					AN103/ CVREFH
94		P46					AN102
95		P45					AN101
96		P44					AN100
97		P43					AN003/ CVREFL
98		P42					AN002
99		P41					AN001
100		P40					AN000
101	AVCC0						
102	VREFH0						
103	VREFL0						
104	AVSS0						
105		P82	WAIT#	MTIC5U	SCK12	IRQ3	
106		P81	A8	MTIC5V	TXD12/SMOSI12/ SSDA12/TXDX12/ SIOX12		
107		P80	A9	MTIC5W	RXD12/SMISO12/ SSCL12/RXDX12	IRQ5	
108		P12	CS3#				
109		P11	ALE	MTCLKC		IRQ1-DS	

Downloaded from Arrow.com.

Table 1.7 List of Pins and Pin Functions (112-Pin LQFP) (4/4)

Pin Number 112-Pin LQFP	Power Supply Clock System Control	I/O Port	Bus	Timer (MTU3, GPT, POE3, CAC)	Communications (SCIc, SCId, RSPI, RIIC, CAN)	Interrupt	S12ADB, AD, DA
110		P10		MTCLKD		IRQ0-DS	
111	TRST#	P05	WAIT#/CS2#				
112	TMS	P04					

Note 1. Available for use as SCI pin only in boot mode.

Downloaded from Arrow.com.

Table 1.8 List of Pins and Pin Functions (100-Pin LQFP) (1/3)

Pin Number 100-Pin LQFP	Power Supply Clock System Control	I/O Port	Bus	Timer (MTU3, GPT, POE3, CAC)	Communications (SCIc, SCId, RSPI, RIIC, CAN)	Interrupt	S12ADB, AD, DA
1		PE5	BCLK			IRQ0	
2	EMLE						
3	VSS						
4		P01	RD#		CTS0#/RTS0#/SS0#		
5	VCL						
6		P00	CS1#	CACREF			
7	MD/FINED						
8		PE4	A10	POE10#/MTCLKC		IRQ1	
9		PE3	A11	POE11#/MTCLKD		IRQ2-DS	
10	RES#						
11	XTAL						
12	VSS						
13	EXTAL						
14	VCC						
15		PE2		POE10#		NMI	
16		PE1	WR0#/WR#		CTS12#/RTS12#/ SS12#/SSLA3/SSLB3		
17		PE0	WR1#/BC1#/ WAIT#		SSLA2/SSLB2/CRX1	IRQ7	
18	TRST#	PD7		GTIOC0A	CTS0#/RTS0#/SS0#/ SSLA1/SSLB1/CTX1		
19	TMS	PD6		GTIOC0B	SSLA0/SSLB0		
20	TDI	PD5		GTIOC1A	RXD1/SMISO1/SSCL1	IRQ6	
21	TCK/FINEC	PD4		GTIOC1B	SCK1		
22	TDO	PD3		GTIOC2A	TXD1/SMOSI1/SSDA1		
23		PD2	CS2#	GTIOC2B	MOSIA/MOSIB		
24		PD1	CS0#	GTIOC3A	MISOA/MISOB		
25		PD0	A12	GTIOC3B	RSPCKA/RSPCKB		
26		PB7	A19		SCK12		
27		PB6	A18		RXD12/SMISO12/ SSCL12/RXDX12/ CRX1	IRQ2	
28		PB5	A17		TXD12/SMOSI12/ SSDA12/TXDX12/ SIOX12/CTX1		
29	PLLVCC						
30		PB4	A16	POE8#/GTETRG0		IRQ3-DS	
31	PLLVSS						
32		PB3	A15	MTIOC0A/CACREF	SCK0		
33		PB2		MTIOC0B	TXD0/SMOSI0/ SSDA0/SDA0		
34		PB1		MTIOC0C	RXD0/SMISO0/ SSCL0/SCL0	IRQ4	
35		PB0	A14	MTIOC0D	MOSIA/MOSIB		
36		PA5		MTIOC1A	RXD0/SMISO0/ SSCL0/ MISOA/MISOB		ADTRG1#

Downloaded from Arrow.com.

Table 1.8 List of Pins and Pin Functions (100-Pin LQFP) (2/3)

Pin Number 100-Pin LQFP	Power Supply Clock System Control	I/O Port	Bus	Timer (MTU3, GPT, POE3, CAC)	Communications (SCIc, SCId, RSPI, RIIC, CAN)	Interrupt	S12ADB, AD, DA
37		PA4		MTIOC1B	TXD0/SMOSI0/ SSDA0/ RSPCKA/RSPCKB		ADTRG0#
38		PA3		MTIOC2A	SCK0/SSLA0/SSLB0		
39		PA2		MTIOC2B	RXD2/SMISO2/ SSCL2/ SSLA1/SSLB1		
40		PA1		MTIOC6A	TXD2/SMOSI2/ SSDA2/ SSLA2/SSLB2		
41		PA0		MTIOC6C	SCK2/SSLA3/SSLB3		
42	VCC						
43		P96	A13	POE4#	RXD1/SMISO1/SSCL1	IRQ4-DS	
44	VSS						
45		P95		MTIOC6B/GTIOC4A	TXD1/SMOSI1/SSDA1		
46		P94		MTIOC7A/GTIOC5A	CTS1#/RTS1#/SS1#		
47		P93		MTIOC7B/GTIOC6A	CTS2#/RTS2#/SS2#		
48		P92		MTIOC6D/GTIOC4B			
49		P91		MTIOC7C/GTIOC5B			
50		P90		MTIOC7D/GTIOC6B			
51		P76	D0/[A0/D0]	MTIOC4D/GTIOC2B			
52		P75	D1/[A1/D1]	MTIOC4C/GTIOC1B			
53		P74	D2/[A2/D2]	MTIOC3D/GTIOC0B			
54		P73	D3/[A3/D3]	MTIOC4B/GTIOC2A			
55		P72	D4/[A4/D4]	MTIOC4A/GTIOC1A			
56		P71	D5/[A5/D5]	MTIOC3B/GTIOC0A			
57		P70	D6/[A6/D6]	POE0#	CTS1#/RTS1#/SS1#	IRQ5-DS	
58		P33	D7/[A7/D7]	MTIOC3A/MTCLKA	SSLA3/SSLB3		
59		P32	D8/[A8/D8]	MTIOC3C/MTCLKB	SSLA2/SSLB2		
60	VCC						
61		P31	D9/[A9/D9]	MTIOC0A/MTCLKC	SSLA1/SSLB1		
62	VSS						
63		P30	D10/[A10/ D10]	MTIOC0B/MTCLKD	SCK0/SSLA0/SSLB0		
64		P24	D11/[A11/D11]		CTS0#/RTS0#/SS0#/ RSPCKA/RSPCKB	IRQ4	
65		P23	D12/[A12/ D12]	CACREF	TXD0/SMOSI0/ SSDA0/MOSIA/ MOSIB/CTX1		
66		P22	D13/[A13/ D13]		RXD0/SMISO0/ SSCL0/MISOA/ MISOB/CRX1		ADTRG#
67		P21	D14/[A14/ D14]	MTCLKA		IRQ6-DS	ADTRG1#
68		P20	D15/[A15/ D15]	MTCLKB		IRQ7-DS	ADTRG0#
69		P65	A0/BC0#				AN5
70		P64	A1				AN4

Downloaded from Arrow.com.

Table 1.8 List of Pins and Pin Functions (100-Pin LQFP) (3/3)

Pin Number 100-Pin LQFP	Power Supply Clock System Control	I/O Port	Bus	Timer (MTU3, GPT, POE3, CAC)	Communications (SCIc, SCId, RSPI, RIIC, CAN)	Interrupt	S12ADB, AD, DA
71	AVCC						
72	VREF						
73	AVSS						
74		P63	A2				AN3
75		P62	A3				AN2
76		P61	A4				AN1
77		P60	A5				AN0
78		P55					AN11/DA1
79		P54					AN10/ DA0
80		P53	A6				AN9
81		P52	A7				AN8
82		P51					AN7
83		P50					AN6
84		P47					AN103/ CVREFH
85		P46					AN102
86		P45					AN101
87		P44					AN100
88		P43					AN003/ CVREFL
89		P42					AN002
90		P41					AN001
91		P40					AN000
92	AVCC0						
93	VREFH0						
94	VREFL0						
95	AVSS0						
96		P82	WAIT#	MTIC5U	SCK12	IRQ3	
97		P81	A8	MTIC5V	TXD12/SMOSI12/ SSDA12/TXDX12/ SIOX12		
98		P80	A9	MTIC5W	RXD12/SMISO12/ SSCL12/RXDX12	IRQ5	
99		P11	ALE	MTCLKC		IRQ1-DS	
100		P10		MTCLKD		IRQ0-DS	

Downloaded from Arrow.com.

Table 1.9 List of Pins and Pin Functions (64-Pin LQFP) (1/3)

Pin Number 64-Pin LQFP	Power Supply Clock System Control	I/O Port	POE3	Timer (MTU3, GPT, CAC)	Communications (SCIc, SCId)	Communications (RSPI, RIIC)	Interrupt	S12ADB
1	EMLE							
2		P00		GTIOC3A	CTS0# RTS0# SS0#		IRQ2-DS	
3	VCL							
4		P01		GTIOC3B CACREF			IRQ4-DS	
5	MD FINED							
6	RES#							
7	XTAL							
8	VSS							
9	EXTAL							
10	VCC							
11		PE2	POE10#				NMI	
12	TRST#	PD7		GTIOC0A	CTS0# RTS0# SS0#			
13	TMS	PD6		GTIOC0B				
14	TDI	PD5		GTIOC1A	RXD1 SMISO1 SSCL1			
15	TCK FINEC	PD4		GTIOC1B	SCK1			
16	TDO	PD3		GTIOC2A	TXD1 SMOSI1 SSDA1			
17		PB7		GTIOC2B	SCK12			
18		PB6		GTIOC2B	RXD12 SMISO12 SSCL12 RXDX12			
19		PB5	POE11#		TXD12 SMOSI12 SSDA12 TXDX12 SIOX12		IRQ0	
20	VCC							
21		PB4	POE8#	GTETRG	CTS12# RTS12# SS12#		IRQ3-DS	
22	VSS							
23		PB3		MTIOC0A MTCLKA CACREF	SCK0			
24		PB2		MTIOC0B MTCLKB	TXD0 SMOSI0 SSDA0	SDA		
25		PB1		MTIOC0C	RXD0 SMISO0 SSCL0	SCL		
26		PB0		MTIOC0D		MOSIA		

Downloaded from Arrow.com.

Table 1.9 List of Pins and Pin Functions (64-Pin LQFP) (2/3)

Pin Number 64-Pin LQFP	Power Supply Clock System Control	I/O Port	POE3	Timer (MTU3, GPT, CAC)	Communications (SCIc, SCId)	Communications (RSPI, RIIC)	Interrupt	S12ADB
27		PA3		MTIOC2A		SSLA0		
28		PA2		MTIOC2B		SSLA1		
29		P94			TXD1 SMOSI1 SSDA1			
30		P93			RXD1 SMISO1 SSCL1		IRQ1	
31		P92			SCK1			
32		P91			CTS1# RTS1# SS1#			
33		P76		MTIOC4D GTIOC2B MTIOC7D				
34		P75		MTIOC4C GTIOC1B MTIOC7C				
35		P74		MTIOC3D GTIOC0B MTIOC6D				
36		P73		MTIOC4B GTIOC2A MTIOC7B				
37		P72		MTIOC4A GTIOC1A MTIOC7A				
38		P71		MTIOC3B GTIOC0A MTIOC6B				
39		P70	POE0#		CTS1# RTS1# SS1#		IRQ5-DS	
40		P33		MTIOC3A MTIOC6A		SSLA3		
41		P32		MTIOC3C MTIOC6C		SSLA2		
42	VCC							
43		P31		MTIOC0A		SSLA1		
44	VSS							
45		P30		MTIOC0B MTCLKD	TXD0 SMOSI0 SSDA0	SSLA0		
46		P24		MTIC5U MTCLKC	RXD0 SMISO0 SSCL0	RSPCKA		
47		P23		MTIC5V MTCLKB CACREF	SCK0	MOSIA		
48		P22		MTIC5W MTCLKA	CTS0# RTS0# SS0#	MISOA		
49		P47						AN007 CVREFH

Downloaded from Arrow.com.

Table 1.9 List of Pins and Pin Functions (64-Pin LQFP) (3/3)

Pin Number 64-Pin LQFP	Power Supply Clock System Control	I/O Port	POE3	Timer (MTU3, GPT, CAC)	Communications (SCIc, SCId)	Communications (RSPI, RIIC)	Interrupt	S12ADB
50		P46						AN006
51		P45						AN005
52		P44						AN004
53		P43						AN003 CVREFL
54		P42						AN002
55		P41						AN001
56		P40						AN000
57	AVCC0							
58	VREFH0							
59	VREFL0							
60	AVSS0							
61		P11		MTCLKC			IRQ1-DS	
62		P10		MTCLKD			IRQ0-DS	
63		PA5		MTIOC1A		MISOA		
64		PA4		MTIOC1B		RSPCKA		ADTRG0#

Downloaded from Arrow.com.

Table 1.10 List of Pins and Pin Functions (48-Pin LQFP) (1/2)

Pin Number 64-Pin LQFP	Power Supply Clock System Control	I/O Port	POE3	Timer (MTU3, GPT, CAC)	Communications (SCIc, SCId)	Communications (RSPI, RIIC)	Interrupt	S12ADB
1	MD FINED							
2	RES#							
3	XTAL							
4	VSS							
5	EXTAL							
6	VCC							
7		PE2	POE10#				NMI	
8	TRST#	PD7		GTIOC0A	CTS0# RTS0# SS0#			
9	TMS	PD6		GTIOC0B				
10	TDI	PD5		GTIOC1A	RXD1 SMISO1 SSCL1			
11	TCK FINEC	PD4		GTIOC1B	SCK1			
12	TDO	PD3		GTIOC2A	TXD1 SMOSI1 SSDA1			
13		PB6		GTIOC2B	RXD12 SMISO12 SSCL12 RXDX12			
14		PB5	POE11#		TXD12 SMOSI12 SSDA12 TXDX12 SIOX12		IRQ0	
15	VCC							
16		PB4	POE8#	GTETRG	CTS12# RTS12# SS12#		IRQ3-DS	
17	VSS							
18		PB3		MTIOC0A MTCLKA CACREF	SCK0			
19		PB2		MTIOC0B MTCLKB	TXD0 SMOSI0 SSDA0	SDA		
20		PB1		MTIOC0C	RXD0 SMISO0 SSCL0	SCL		
21		PB0		MTIOC0D		MOSIA		
22		PA3		MTIOC2A		SSLA0		
23		PA2		MTIOC2B		SSLA1		
24		P76		MTIOC4D GTIOC2B MTIOC7D				
25		P75		MTIOC4C GTIOC1B MTIOC7C				

Downloaded from Arrow.com.

Table 1.10 List of Pins and Pin Functions (48-Pin LQFP) (2/2)

Pin Number 64-Pin LQFP	Power Supply Clock System Control	I/O Port	POE3	Timer (MTU3, GPT, CAC)	Communications (SCIc, SCId)	Communications (RSPI, RIIC)	Interrupt	S12ADB
26		P74		MTIOC3D GTIOC0B MTIOC6D				
27		P73		MTIOC4B GTIOC2A MTIOC7B				
28		P72		MTIOC4A GTIOC1A MTIOC7A				
29		P71		MTIOC3B GTIOC0A MTIOC6B				
30		P70	POE0#		CTS1# RTS1# SS1#		IRQ5-DS	
31	VCC							
32		P30		MTIOC0B MTCLKD	TXD0 SMOSI0 SSDA0	SSLA0		
33	VSS							
34		P24		MTIC5U MTCLKC	RXD0 SMISO0 SSCL0	RSPCKA		
35		P23		MTIC5V MTCLKB CACREF	SCK0	MOSIA		
36		P22		MTIC5W MTCLKA	CTS0# RTS0# SS0#	MISOA		
37		P47						AN007 CVREFH
38		P44						AN004
39		P43						AN003 CVREFL
40		P42						AN002
41		P41						AN001
42		P40						AN000
43	AVCC0							
44	VREFH0							
45	VREFL0							
46	AVSS0							
47	VCL							
48	EMLE							

Downloaded from Arrow.com.

2. CPU

The RX CPU has sixteen general-purpose registers, nine control registers, and one accumulator used for DSP instructions.

General-purpose register

b31 … b0
R0 (SP)*1
R1
R2
R3
R4
R5
R6
R7
R8
R9
R10
R11
R12
R13
R14
R15

Control register

b31 … b0	
ISP	(Interrupt stack pointer)
USP	(User stack pointer)
INTB	(Interrupt table register)
PC	(Program counter)
PSW	(Processor status word)
BPC	(Backup PC)
BPSW	(Backup PSW)
FINTV	(Fast interrupt vector register)
FPSW	(Floating-point status word)

DSP instruction register

b63 … b0
ACC (Accumulator)

Note 1. The stack pointer (SP) can be the interrupt stack pointer (ISP) or user stack pointer (USP), according to the value of the U bit in the PSW.

Figure 2.1 Register Set of the CPU

Downloaded from Arrow.com.

2.1 General-Purpose Registers (R0 to R15)

This CPU has sixteen general-purpose registers (R0 to R15). R1 to R15 can be used as data registers or address registers. R0, a general-purpose register, also functions as the stack pointer (SP).
The stack pointer is switched to operate as the interrupt stack pointer (ISP) or user stack pointer (USP) by the value of the stack pointer select bit (U) in the processor status word (PSW).

2.2 Control Registers

(1) Interrupt Stack Pointer (ISP)/User Stack Pointer (USP)

The stack pointer (SP) can be either of two types, the interrupt stack pointer (ISP) or the user stack pointer (USP). Whether the stack pointer operates as the ISP or USP depends on the value of the stack pointer select bit (U) in the processor status word (PSW).
Set the ISP or USP to a multiple of four, as this reduces the numbers of cycles required to execute interrupt sequences and instructions entailing stack manipulation.

(2) Interrupt Table Register (INTB)

The interrupt table register (INTB) specifies the address where the relocatable vector table starts.

(3) Program Counter (PC)

The program counter (PC) indicates the address of the instruction being executed.

(4) Processor Status Word (PSW)

The processor status word (PSW) indicates the results of instruction execution or the state of the CPU.

(5) Backup PC (BPC)

The backup PC (BPC) is provided to speed up response to interrupts.
After a fast interrupt has been generated, the contents of the program counter (PC) are saved in the BPC register.

(6) Backup PSW (BPSW)

The backup PSW (BPSW) is provided to speed up response to interrupts.
After a fast interrupt has been generated, the contents of the processor status word (PSW) are saved in the BPSW. The allocation of bits in the BPSW corresponds to that in the PSW.

(7) Fast Interrupt Vector Register (FINTV)

The fast interrupt vector register (FINTV) is provided to speed up response to interrupts.
The FINTV register specifies a branch destination address when a fast interrupt has been generated.

(8) Floating-Point Status Word (FPSW)

The floating-point status word (FPSW) indicates the results of floating-point operations.
When an exception handling enable bit (Ej) enables the exception handling (Ej = 1), the exception cause can be identified by checking the corresponding Cj flag in the exception handling routine. If the exception handling is masked (Ej = 0), the occurrence of exception can be checked by reading the Fj flag at the end of a series of processing. Once the Fj flag has been set to 1, this value is retained until it is cleared to 0 by software (j = X, U, Z, O, or V).

Downloaded from Arrow.com.

2.2.1 Register Associated with DSP Instructions

(1) Accumulator (ACC)

The accumulator (ACC) is a 64-bit register used for DSP instructions. The accumulator is also used for the multiply and multiply-and-accumulate instructions; EMUL, EMULU, FMUL, MUL, and RMPA, in which case the prior value in the accumulator is modified by execution of the instruction.

Use the MVTACHI and MVTACLO instructions for writing to the accumulator. The MVTACHI and MVTACLO instructions write data to the higher-order 32 bits (bits 63 to 32) and the lower-order 32 bits (bits 31 to 0), respectively.

Use the MVFACHI and MVFACMI instructions for reading data from the accumulator. The MVFACHI and MVFACMI instructions read data from the higher-order 32 bits (bits 63 to 32) and the middle 32 bits (bits 47 to 16), respectively.

Downloaded from Arrow.com.

3. Address Space

3.1 Address Space

This MCU has a 4-Gbyte address space, consisting of the range of addresses from 0000 0000h to FFFF FFFFh. That is, linear access to an address space of up to 4 Gbytes is possible, and this contains both program and data areas.
Figure 3.1 shows the memory maps in the respective operating modes. Accessible areas will differ according to the operating mode and states of control bits.

Downloaded from Arrow.com.

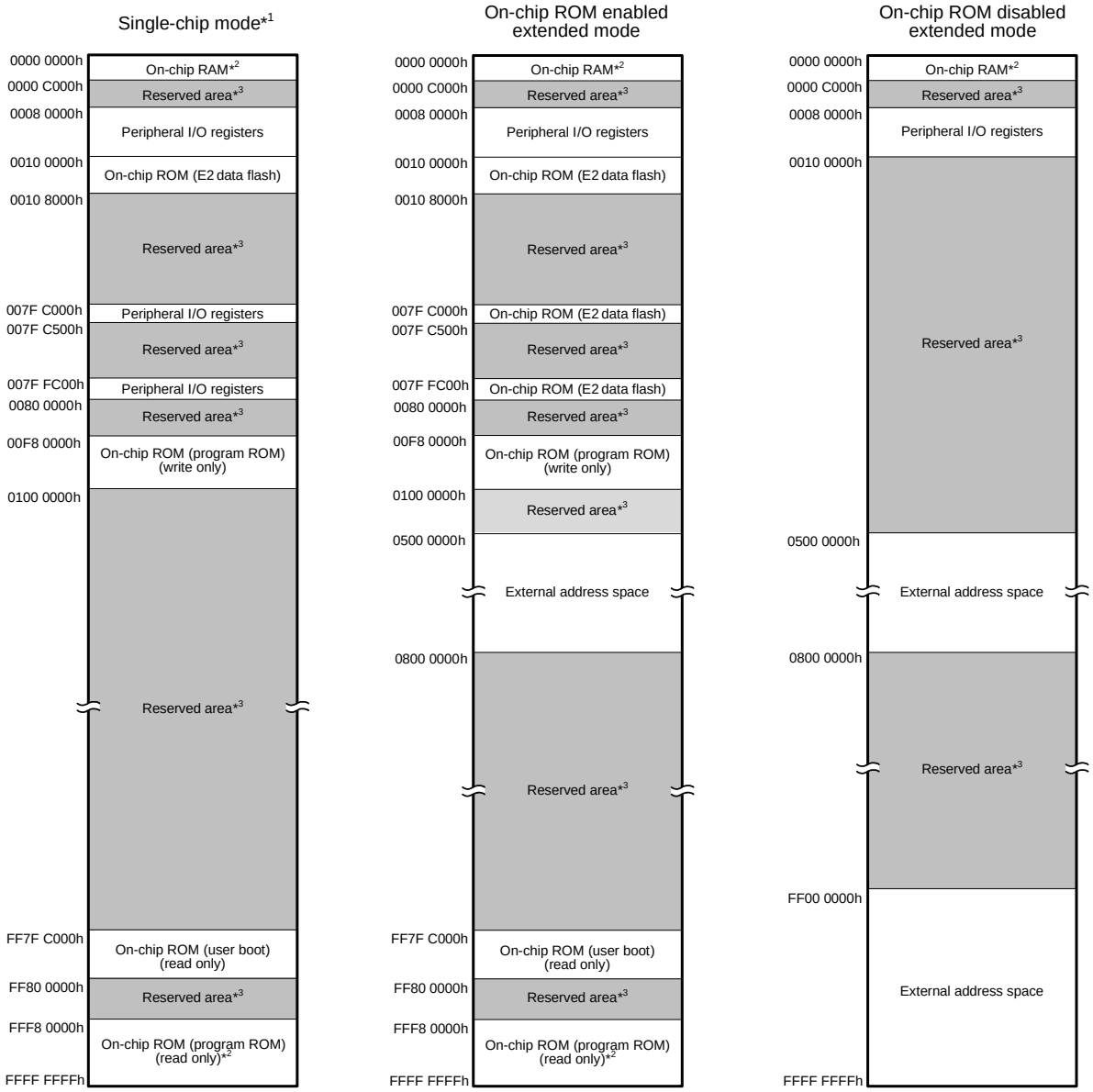

Note 1. The address space in boot mode and user boot mode is the same as the address space in single-chip mode.
Note 2. The capacity of ROM/RAM differs depending on the products.

ROM (bytes)		RAM (bytes)		E2 DataFlash (bytes)	
Capacity	**Address**	**Capacity**	**Address**	**Capacity**	**Address**
512 K	FFF8 0000h to FFFF FFFFh	48 K	0000 0000h to 0000 BFFFh	32 K	0010 0000h to 0010 8000h
384 K	FFFA 0000h to FFFF FFFFh	32 K	0000 0000h to 0000 7FFFh		
256 K	FFFC 0000h to FFFF FFFFh	24 K	0000 0000h to 0000 5FFFh		
64 K	FFFF 0000h to FFFF FFFFh	8 K	0000 0000h to 0000 1FFFh	8 K	0010 0000h to 0010 2000h
48 K	FFFF 4000h to FFFF FFFFh				
32 K	FFFF 8000h to FFFF FFFFh				

Note:•See Table 1.3, List of Products, for the product type name.

Note 3. Reserved areas should not be accessed.
Note 4. For details on the FCU, see section 41, Flash Memory in the User's Manual: Hardware.

Figure 3.1 Memory Map in Each Operating Mode

Downloaded from Arrow.com.

3.2 External Address Space

The external address space is divided into up to four CS areas (CS0 to CS3), each corresponding to the CSn# signal output from a CSn# (n = 0 to 3) pin.

Figure 3.2 shows the address ranges corresponding to the individual CS areas (CS0 to CS3) in on-chip ROM disabled extended mode.

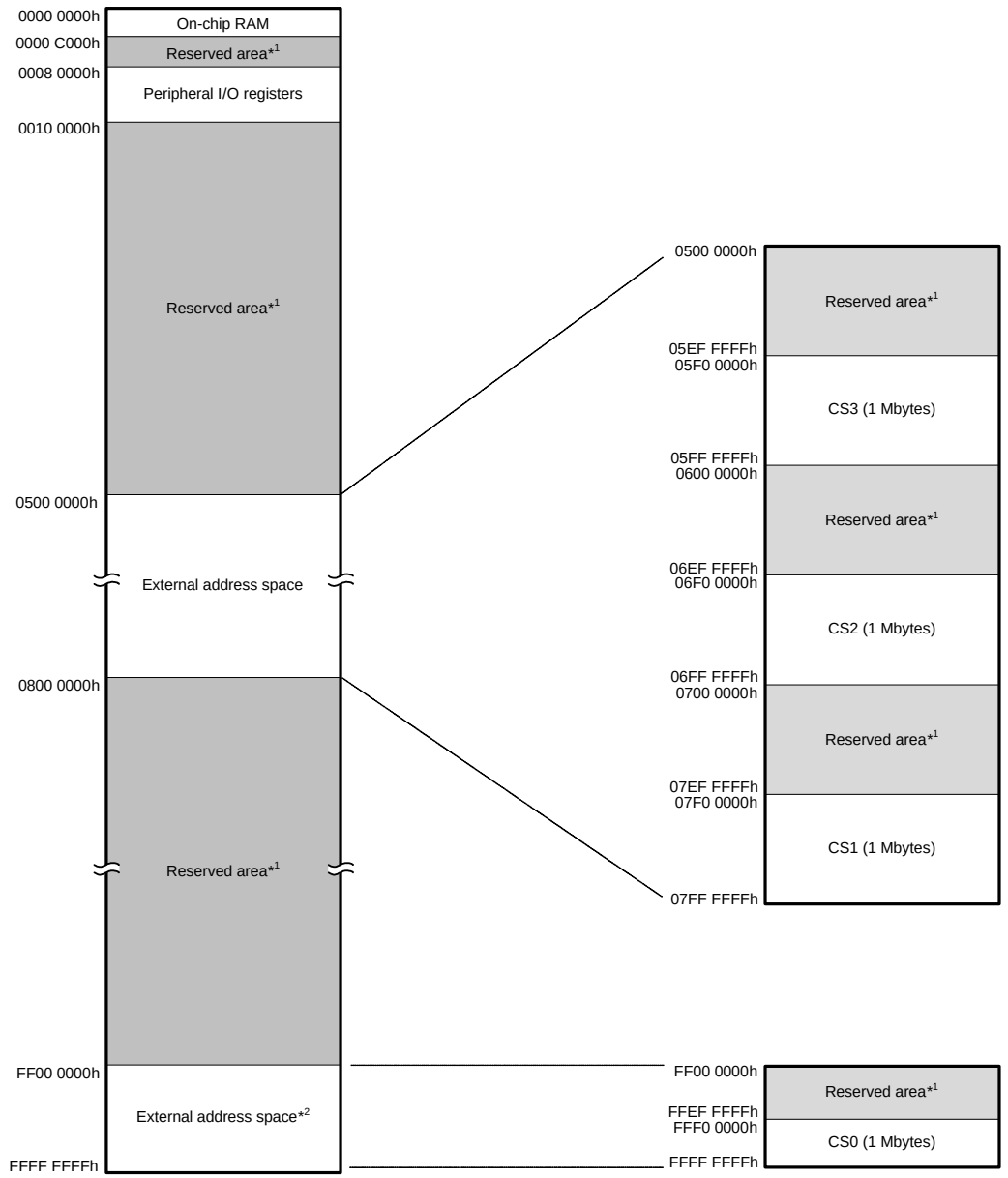

Note 1. Reserved areas should not be accessed.
Note 2. The CS0 area is disabled in on-chip ROM enabled extended mode.
In this mode, the address space for addresses above 0800 0000h is as shown in Figure 3.1, Memory Map in Each Operating Mode.

Figure 3.2 Correspondence between External Address Spaces and CS Areas (In On-Chip ROM Disabled Extended Mode)

Downloaded from Arrow.com.

4. I/O Registers

This section gives information on the on-chip I/O register addresses. The information is given as shown below. Notes on writing to registers are also given at the end.

(1) I/O register addresses (address order)

- Registers are listed from the lower allocation addresses.
- Registers are classified according to module symbols.
- The number of access cycles indicates the number of cycles based on the specified reference clock.
- Among the internal I/O register area, addresses not listed in the list of registers are reserved. Reserved addresses must not be accessed. Do not access these addresses; otherwise, the operation when accessing these bits and subsequent operations cannot be guaranteed.

(2) Notes on writing to I/O registers

When writing to an I/O register, the CPU starts executing the subsequent instruction before completing I/O register write. This may cause the subsequent instruction to be executed before the post-update I/O register value is reflected on the operation.
As described in the following examples, special care is required for the cases in which the subsequent instruction must be executed after the post-update I/O register value is actually reflected.

[Examples of cases requiring special care]

- The subsequent instruction must be executed while an interrupt request is disabled with the IENj bit in IERn of the ICU (interrupt request enable bit) cleared to 0.
- A WAIT instruction is executed immediately after the preprocessing for causing a transition to the low power consumption state.

In the above cases, after writing to an I/O register, wait until the write operation is completed using the following procedure and then execute the subsequent instruction.

(a) Write to an I/O register.
(b) Read the value from the I/O register to a general register.
(c) Execute the operation using the value read.
(d) Execute the subsequent instruction.

[Instruction examples]

- Byte-size I/O registers

```
MOV.L  #SFR_ADDR, R1
MOV.B  #SFR_DATA, [R1]
CMP    [R1].UB, R1
;; Next process
```

- Word-size I/O registers

```
MOV.L  #SFR_ADDR, R1
MOV.W  #SFR_DATA, [R1]
CMP    [R1].W, R1
;; Next process
```


Downloaded from Arrow.com.

- Longword-size I/O registers

```
MOV.L  #SFR_ADDR, R1
MOV.L  #SFR_DATA, [R1]
CMP    [R1].L, R1
;; Next process
```

If multiple registers are written to and a subsequent instruction should be executed after the write operations are entirely completed, only read the I/O register that was last written to and execute the operation using the value; it is not necessary to read or execute operation for all the registers that were written to.

(3) Number of Access Cycles to I/O Registers

For the number of I/O register access cycles, refer to Table 4.1, List of I/O Registers (Address Order).
The number of access cycles to I/O registers is obtained by following equation.*1

Number of access cycles to I/O registers = Number of bus cycles for internal main bus 1 +
Number of divided clock synchronization cycles +
Number of bus cycles for internal peripheral bus 1 to 6

The number of bus cycles of internal peripheral bus 1 to 6 differs according to the register to be accessed.
When peripheral functions connected to internal peripheral bus 2 to 6 are accessed, the number of divided clock synchronization cycles is added.
The number of divided clock synchronization cycles differs depending on the frequency ratio between ICLK and PCLK (or FCLK, BCLK) or bus access timing.
In the peripheral function unit, when the frequency ratio of ICLK is equal to or greater than that of PCLK (or FCLK), the sum of the number of bus cycles for internal main bus 1 and the number of the divided clock synchronization cycles will be one cycle of PCLK (or FCLK) at a maximum. Therefore, one PCLK (or FCLK) has been added to the number of access states shown in Table 4.1.
When the frequency ratio of ICLK is lower than that of PCLK (or FCLK), the subsequent bus access is started from the ICLK cycle following the completion of the access to the peripheral functions. Therefore, the access cycles are described on an ICLK basis.
In the external bus control unit, the sum of the number of bus cycles for internal main bus 1 and the number of divided clock synchronization cycles will be one cycle of BCLK at a maximum. Therefore, one BCLK is added to the number of access cycles shown in Table 4.1.

Note 1. This applies to the number of cycles when the access from the CPU does not conflict with the instruction fetching to the external memory or bus access from the different bus master (DMAC or DTC).

(4) Note on Sleep Mode and Mode Transition

During sleep mode or a mode transition, do not write to the system control related registers (indicated by 'SYSTEM' in the Module Symbol column in Table 4.1, List of I/O Registers (Address Order)).

Downloaded from Arrow.com.

4.1 I/O Register Addresses (Address Order)

Table 4.1 List of I/O Registers (Address Order) (1/48)

Address	Module Symbol	Register Name	Register Symbol	Number of Bits	Access Size	Number of Access States		Module Name	Remarks
						ICLK ≥ PCLK	ICLK < PCLK		
0008 0000h	SYSTEM	Mode Monitor Register	MDMONR	16	16	3 ICLK		Operating Modes	
0008 0002h	SYSTEM	Mode Status Register	MDSR	16	16	3 ICLK			Not present in versions with 64 or 48 pins.
0008 0006h	SYSTEM	System Control Register 0	SYSCR0	16	16	3 ICLK			
0008 0008h	SYSTEM	System Control Register 1	SYSCR1	16	16	3 ICLK			
0008 000Ch	SYSTEM	Standby Control Register	SBYCR	16	16	3 ICLK		Low Power Consumption	
0008 0010h	SYSTEM	Module Stop Control Register A	MSTPCRA	32	32	3 ICLK			
0008 0014h	SYSTEM	Module Stop Control Register B	MSTPCRB	32	32	3 ICLK			
0008 0018h	SYSTEM	Module Stop Control Register C	MSTPCRC	32	32	3 ICLK			
0008 0020h	SYSTEM	System Clock Control Register	SCKCR	32	32	3 ICLK		Clock Generation Circuit	
0008 0024h	SYSTEM	System Clock Control Register 2	SCKCR2	16	16	3 ICLK			Not present in versions with 64 or 48 pins.
0008 0026h	SYSTEM	System Clock Control Register 3	SCKCR3	16	16	3 ICLK			
0008 0028h	SYSTEM	PLL Control Register	PLLCR	16	16	3 ICLK			
0008 002Ah	SYSTEM	PLL Control Register 2	PLLCR2	8	8	3 ICLK			
0008 0030h	SYSTEM	External Bus Clock Control Register	BCKCR	8	8	3 ICLK			Not present in versions with 64 or 48 pins.
0008 0032h	SYSTEM	Main Clock Oscillator Control Register	MOSCCR	8	8	3 ICLK			
0008 0034h	SYSTEM	Low-Speed On-Chip Oscillator Control Register	LOCOCR	8	8	3 ICLK			
0008 0035h	SYSTEM	IWDT-Dedicated On-Chip Oscillator Control Register	ILOCOCR	8	8	3 ICLK			
0008 0040h	SYSTEM	Oscillation Stop Detection Control Register	OSTDCR	8	8	3 ICLK			
0008 0041h	SYSTEM	Oscillation Stop Detection Status Register	OSTDSR	8	8	3 ICLK			
0008 00A2h	SYSTEM	Main Clock Oscillator Wait Control Register	MOSCWTCR	8	8	3 ICLK		Low Power Consumption	
0008 00A6h	SYSTEM	PLL Wait Control Register	PLLWTCR	8	8	3 ICLK			
0008 00C0h	SYSTEM	Reset Status Register 2	RSTSR2	8	8	3 ICLK		Resets	
0008 00C2h	SYSTEM	Software Reset Register	SWRR	16	16	3 ICLK			
0008 00E0h	SYSTEM	Voltage Monitoring 1 Circuit Control Register 1	LVD1CR1	8	8	3 ICLK		LVDA	
0008 00E1h	SYSTEM	Voltage Monitoring 1 Circuit Status Register	LVD1SR	8	8	3 ICLK			
0008 00E2h	SYSTEM	Voltage Monitoring 2 Circuit Control Register 1	LVD2CR1	8	8	3 ICLK			
0008 00E3h	SYSTEM	Voltage Monitoring 2 Circuit Status Register	LVD2SR	8	8	3 ICLK			
0008 03FEh	SYSTEM	Protect Register	PRCR	16	16	3 ICLK		Register Write Protection Function	
0008 1300h	BSC	Bus Error Status Clear Register	BERCLR	8	8	2 ICLK		Buses	
0008 1304h	BSC	Bus Error Monitoring Enable Register	BEREN	8	8	2 ICLK			
0008 1308h	BSC	Bus Error Status Register 1	BERSR1	8	8	2 ICLK			
0008 130Ah	BSC	Bus Error Status Register 2	BERSR2	16	16	2 ICLK			
0008 1310h	BSC	Bus Priority Control Register	BUSPRI	16	16	2 ICLK			
0008 2000h	DMAC0	DMA Source Address Register	DMSAR	32	32	2 ICLK		DMACA	
0008 2004h	DMAC0	DMA Destination Address Register	DMDAR	32	32	2 ICLK			
0008 2008h	DMAC0	DMA Transfer Count Register	DMCRA	32	32	2 ICLK			
0008 200Ch	DMAC0	DMA Block Transfer Count Register	DMCRB	16	16	2 ICLK			
0008 2010h	DMAC0	DMA Transfer Mode Register	DMTMD	16	16	2 ICLK			
0008 2013h	DMAC0	DMA Interrupt Setting Register	DMINT	8	8	2 ICLK			
0008 2014h	DMAC0	DMA Address Mode Register	DMAMD	16	16	2 ICLK			
0008 2018h	DMAC0	DMA Offset Register	DMOFR	32	32	2 ICLK			
0008 201Ch	DMAC0	DMA Transfer Enable Register	DMCNT	8	8	2 ICLK			
0008 201Dh	DMAC0	DMA Software Start Register	DMREQ	8	8	2 ICLK			
0008 201Eh	DMAC0	DMA Status Register	DMSTS	8	8	2 ICLK			

Downloaded from Arrow.com.

Table 4.1 List of I/O Registers (Address Order) (2/48)

Address	Module Symbol	Register Name	Register Symbol	Number of Bits	Access Size	Number of Access States		Module Name	Remarks
						ICLK ≥ PCLK	ICLK < PCLK		
0008 201Fh	DMAC0	DMA Activation Source Flag Control Register	DMCSL	8	8	2 ICLK		DMACA	
0008 2040h	DMAC1	DMA Source Address Register	DMSAR	32	32	2 ICLK			
0008 2044h	DMAC1	DMA Destination Address Register	DMDAR	32	32	2 ICLK			
0008 2048h	DMAC1	DMA Transfer Count Register	DMCRA	32	32	2 ICLK			
0008 204Ch	DMAC1	DMA Block Transfer Count Register	DMCRB	16	16	2 ICLK			
0008 2050h	DMAC1	DMA Transfer Mode Register	DMTMD	16	16	2 ICLK			
0008 2053h	DMAC1	DMA Interrupt Setting Register	DMINT	8	8	2 ICLK			
0008 2054h	DMAC1	DMA Address Mode Register	DMAMD	16	16	2 ICLK			
0008 205Ch	DMAC1	DMA Transfer Enable Register	DMCNT	8	8	2 ICLK			
0008 205Dh	DMAC1	DMA Software Start Register	DMREQ	8	8	2 ICLK			
0008 205Eh	DMAC1	DMA Status Register	DMSTS	8	8	2 ICLK			
0008 205Fh	DMAC1	DMA Activation Source Flag Control Register	DMCSL	8	8	2 ICLK			
0008 2080h	DMAC2	DMA Source Address Register	DMSAR	32	32	2 ICLK			
0008 2084h	DMAC2	DMA Destination Address Register	DMDAR	32	32	2 ICLK			
0008 2088h	DMAC2	DMA Transfer Count Register	DMCRA	32	32	2 ICLK			
0008 208Ch	DMAC2	DMA Block Transfer Count Register	DMCRB	16	16	2 ICLK			
0008 2090h	DMAC2	DMA Transfer Mode Register	DMTMD	16	16	2 ICLK			
0008 2093h	DMAC2	DMA Interrupt Setting Register	DMINT	8	8	2 ICLK			
0008 2094h	DMAC2	DMA Address Mode Register	DMAMD	16	16	2 ICLK			
0008 209Ch	DMAC2	DMA Transfer Enable Register	DMCNT	8	8	2 ICLK			
0008 209Dh	DMAC2	DMA Software Start Register	DMREQ	8	8	2 ICLK			
0008 209Eh	DMAC2	DMA Status Register	DMSTS	8	8	2 ICLK			
0008 209Fh	DMAC2	DMA Activation Source Flag Control Register	DMCSL	8	8	2 ICLK			
0008 20C0h	DMAC3	DMA Source Address Register	DMSAR	32	32	2 ICLK			
0008 20C4h	DMAC3	DMA Destination Address Register	DMDAR	32	32	2 ICLK			
0008 20C8h	DMAC3	DMA Transfer Count Register	DMCRA	32	32	2 ICLK			
0008 20CCh	DMAC3	DMA Block Transfer Count Register	DMCRB	16	16	2 ICLK			
0008 20D0h	DMAC3	DMA Transfer Mode Register	DMTMD	16	16	2 ICLK			
0008 20D3h	DMAC3	DMA Interrupt Setting Register	DMINT	8	8	2 ICLK			
0008 20D4h	DMAC3	DMA Address Mode Register	DMAMD	16	16	2 ICLK			
0008 20DCh	DMAC3	DMA Transfer Enable Register	DMCNT	8	8	2 ICLK			
0008 20DDh	DMAC3	DMA Software Start Register	DMREQ	8	8	2 ICLK			
0008 20DEh	DMAC3	DMA Status Register	DMSTS	8	8	2 ICLK			
0008 20DFh	DMAC3	DMA Activation Source Flag Control Register	DMCSL	8	8	2 ICLK			
0008 2200h	DMAC	DMACA Module Activation Register	DMAST	8	8	2 ICLK			
0008 2400h	DTC	DTC Control Register	DTCCR	8	8	2ICLK		DTCa	
0008 2404h	DTC	DTC Vector Base Register	DTCVBR	32	32	2ICLK			
0008 2408h	DTC	DTC Address Mode Register	DTCADMOD	8	8	2ICLK			
0008 240Ch	DTC	DTC Module Start Register	DTCST	8	8	2ICLK			
0008 240Eh	DTC	DTC Status Register	DTCSTS	16	16	2ICLK			
0008 3002h	BSC	CS0 Mode Register	CS0MOD	16	16	1, 2 BCLK		Buses	Not present in versions with 64 or 48 pins.
0008 3004h	BSC	CS0 Wait Control Register 1	CS0WCR1	32	32	1, 2 BCLK			Not present in versions with 64 or 48 pins.
0008 3008h	BSC	CS0 Wait Control Register 2	CS0WCR2	32	32	1, 2 BCLK			Not present in versions with 64 or 48 pins.
0008 3012h	BSC	CS1 Mode Register	CS1MOD	16	16	1, 2 BCLK			Not present in versions with 64 or 48 pins.
0008 3014h	BSC	CS1 Wait Control Register 1	CS1WCR1	32	32	1, 2 BCLK			Not present in versions with 64 or 48 pins.
0008 3018h	BSC	CS1 Wait Control Register 2	CS1WCR2	32	32	1, 2 BCLK			Not present in versions with 64 or 48 pins.
0008 3022h	BSC	CS2 Mode Register	CS2MOD	16	16	1, 2 BCLK			Not present in versions with 64 or 48 pins.

Downloaded from Arrow.com.

Table 4.1 List of I/O Registers (Address Order) (3/48)

Address	Module Symbol	Register Name	Register Symbol	Number of Bits	Access Size	Number of Access States		Module Name	Remarks
						ICLK ≥ PCLK	ICLK < PCLK		
0008 3024h	BSC	CS2 Wait Control Register 1	CS2WCR1	32	32	1, 2 BCLK		Buses	Not present in versions with 64 or 48 pins.
0008 3028h	BSC	CS2 Wait Control Register 2	CS2WCR2	32	32	1, 2 BCLK			Not present in versions with 64 or 48 pins.
0008 3032h	BSC	CS3 Mode Register	CS3MOD	16	16	1, 2 BCLK			Not present in versions with 64 or 48 pins.
0008 3034h	BSC	CS3 Wait Control Register 1	CS3WCR1	32	32	1, 2 BCLK			Not present in versions with 64 or 48 pins.
0008 3038h	BSC	CS3 Wait Control Register 2	CS3WCR2	32	32	1, 2 BCLK			Not present in versions with 64 or 48 pins.
0008 3802h	BSC	CS0 Control Register	CS0CR	16	16	1, 2 BCLK			Not present in versions with 64 or 48 pins.
0008 380Ah	BSC	CS0 Recovery Cycle Register	CS0REC	16	16	1, 2 BCLK			Not present in versions with 64 or 48 pins.
0008 3812h	BSC	CS1 Control Register	CS1CR	16	16	1, 2 BCLK			Not present in versions with 64 or 48 pins.
0008 381Ah	BSC	CS1 Recovery Cycle Register	CS1REC	16	16	1, 2 BCLK			Not present in versions with 64 or 48 pins.
0008 3822h	BSC	CS2 Control Register	CS2CR	16	16	1, 2 BCLK			Not present in versions with 64 or 48 pins.
0008 382Ah	BSC	CS2 Recovery Cycle Register	CS2REC	16	16	1, 2 BCLK			Not present in versions with 64 or 48 pins.
0008 3832h	BSC	CS3 Control Register	CS3CR	16	16	1, 2 BCLK			Not present in versions with 64 or 48 pins.
0008 383Ah	BSC	CS3 Recovery Cycle Register	CS3REC	16	16	1, 2 BCLK			Not present in versions with 64 or 48 pins.
0008 3880h	BSC	CS Recovery Cycle Insertion Enable Register	CSRECEN	16	16	1, 2 BCLK			Not present in versions with 64 or 48 pins.
0008 6400h	MPU	Region-0 Start Page Number Register	RSPAGE0	32	32	1 ICLK		MPU	
0008 6404h	MPU	Region-0 End Page Number Register	REPAGE0	32	32	1 ICLK			
0008 6408h	MPU	Region-1 Start Page Number Register	RSPAGE1	32	32	1 ICLK			
0008 640Ch	MPU	Region-1 End Page Number Register	REPAGE1	32	32	1 ICLK			
0008 6410h	MPU	Region-2 Start Page Number Register	RSPAGE2	32	32	1 ICLK			
0008 6414h	MPU	Region-2 End Page Number Register	REPAGE2	32	32	1 ICLK			
0008 6418h	MPU	Region-3 Start Page Number Register	RSPAGE3	32	32	1 ICLK			
0008 641Ch	MPU	Region-3 End Page Number Register	REPAGE3	32	32	1 ICLK			
0008 6420h	MPU	Region-4 Start Page Number Register	RSPAGE4	32	32	1 ICLK			
0008 6424h	MPU	Region-4 End Page Number Register	REPAGE4	32	32	1 ICLK			
0008 6428h	MPU	Region-5 Start Page Number Register	RSPAGE5	32	32	1 ICLK			
0008 642Ch	MPU	Region-5 End Page Number Register	REPAGE5	32	32	1 ICLK			
0008 6430h	MPU	Region-6 Start Page Number Register	RSPAGE6	32	32	1 ICLK			
0008 6434h	MPU	Region-6 End Page Number Register	REPAGE6	32	32	1 ICLK			
0008 6438h	MPU	Region-7 Start Page Number Register	RSPAGE7	32	32	1 ICLK			
0008 643Ch	MPU	Region-7 End Page Number Register	REPAGE7	32	32	1 ICLK			
0008 6500h	MPU	Memory-Protection Enable Register	MPEN	32	32	1 ICLK			
0008 6504h	MPU	Background Access Control Register	MPBAC	32	32	1 ICLK			
0008 6508h	MPU	Memory-Protection Error Status-Clearing Register	MPECLR	32	32	1 ICLK			
0008 650Ch	MPU	Memory-Protection Error Status Register	MPESTS	32	32	1 ICLK			
0008 6514h	MPU	Data Memory-Protection Error Address Register	MPDEA	32	32	1 ICLK			
0008 6520h	MPU	Region Search Address Register	MPSA	32	32	1 ICLK			
0008 6524h	MPU	Region Search Operation Register	MPOPS	16	16	1 ICLK			
0008 6526h	MPU	Region Invalidation Operation Register	MPOPI	16	16	1 ICLK			
0008 6528h	MPU	Instruction-Hit Region Register	MHITI	32	32	1 ICLK			
0008 652Ch	MPU	Data-Hit Region Register	MHITD	32	32	1 ICLK			

Downloaded from Arrow.com.

Table 4.1 List of I/O Registers (Address Order) (4/48)

Address	Module Symbol	Register Name	Register Symbol	Number of Bits	Access Size	Number of Access States		Module Name	Remarks
						ICLK ≥ PCLK	ICLK < PCLK		
0008 7010h	ICU	Interrupt Request Register 016	IR016	8	8	2 ICLK		ICUb	
0008 7015h	ICU	Interrupt Request Register 021	IR021	8	8	2 ICLK			
0008 7017h	ICU	Interrupt Request Register 023	IR023	8	8	2 ICLK			
0008 701Bh	ICU	Interrupt Request Register 027	IR027	8	8	2 ICLK			
0008 701Ch	ICU	Interrupt Request Register 028	IR028	8	8	2 ICLK			
0008 701Dh	ICU	Interrupt Request Register 029	IR029	8	8	2 ICLK			
0008 701Eh	ICU	Interrupt Request Register 030	IR030	8	8	2 ICLK			
0008 701Fh	ICU	Interrupt Request Register 031	IR031	8	8	2 ICLK			
0008 7021h	ICU	Interrupt Request Register 033	IR033	8	8	2 ICLK			Not present in versions with 112, 100, 64 or 48 pins.
0008 7022h	ICU	Interrupt Request Register 034	IR034	8	8	2 ICLK			Not present in versions with 112, 100, 64 or 48 pins.
0008 7023h	ICU	Interrupt Request Register 035	IR035	8	8	2 ICLK			Not present in versions with 112, 100, 64 or 48 pins.
0008 7024h	ICU	Interrupt Request Register 036	IR036	8	8	2 ICLK			
0008 7025h	ICU	Interrupt Request Register 037	IR037	8	8	2 ICLK			
0008 7026h	ICU	Interrupt Request Register 038	IR038	8	8	2 ICLK			
0008 7027h	ICU	Interrupt Request Register 039	IR039	8	8	2 ICLK			
0008 7028h	ICU	Interrupt Request Register 040	IR040	8	8	2 ICLK			
0008 7029h	ICU	Interrupt Request Register 041	IR041	8	8	2 ICLK			
0008 702Ah	ICU	Interrupt Request Register 042	IR042	8	8	2 ICLK			Not present in versions with 64 or 48 pins.
0008 702Bh	ICU	Interrupt Request Register 043	IR043	8	8	2 ICLK			Not present in versions with 64 or 48 pins.
0008 702Ch	ICU	Interrupt Request Register 044	IR044	8	8	2 ICLK			Not present in versions with 64 or 48 pins.
0008 702Dh	ICU	Interrupt Request Register 045	IR045	8	8	2 ICLK			Not present in versions with 64 or 48 pins.
0008 702Eh	ICU	Interrupt Request Register 046	IR046	8	8	2 ICLK			Not present in versions with 64 or 48 pins.
0008 702Fh	ICU	Interrupt Request Register 047	IR047	8	8	2 ICLK			Not present in versions with 64 or 48 pins.
0008 7030h	ICU	Interrupt Request Register 048	IR048	8	8	2 ICLK			Not present in versions with 64 or 48 pins.
0008 7031h	ICU	Interrupt Request Register 049	IR049	8	8	2 ICLK			Not present in versions with 64 or 48 pins.
0008 7032h	ICU	Interrupt Request Register 050	IR050	8	8	2 ICLK			Not present in versions with 64 or 48 pins.
0008 7033h	ICU	Interrupt Request Register 051	IR051	8	8	2 ICLK			Not present in versions with 64 or 48 pins.
0008 7034h	ICU	Interrupt Request Register 052	IR052	8	8	2 ICLK			Not present in versions with 64 or 48 pins.
0008 7035h	ICU	Interrupt Request Register 053	IR053	8	8	2 ICLK			Not present in versions with 64 or 48 pins.
0008 7036h	ICU	Interrupt Request Register 054	IR054	8	8	2 ICLK			Not present in versions with 64 or 48 pins.
0008 7037h	ICU	Interrupt Request Register 055	IR055	8	8	2 ICLK			Not present in versions with 64 or 48 pins.
0008 7038h	ICU	Interrupt Request Register 056	IR056	8	8	2 ICLK			Not present in versions with 64 or 48 pins.
0008 7039h	ICU	Interrupt Request Register 057	IR057	8	8	2 ICLK			
0008 703Ah	ICU	Interrupt Request Register 058	IR058	8	8	2 ICLK			Not present in versions with 64 or 48 pins.
0008 703Bh	ICU	Interrupt Request Register 059	IR059	8	8	2 ICLK			Not present in versions with 64 or 48 pins.
0008 703Ch	ICU	Interrupt Request Register 060	IR060	8	8	2 ICLK			Not present in versions with 64 or 48 pins.
0008 703Dh	ICU	Interrupt Request Register 061	IR061	8	8	2 ICLK			Not present in versions with 64 or 48 pins.

Downloaded from Arrow.com.

Table 4.1 List of I/O Registers (Address Order) (5/48)

Address	Module Symbol	Register Name	Register Symbol	Number of Bits	Access Size	Number of Access States		Module Name	Remarks
						ICLK ≥ PCLK	ICLK < PCLK		
0008 703Eh	ICU	Interrupt Request Register 062	IR062	8	8	2 ICLK		ICUb	Not present in versions with 64 or 48 pins.
0008 7040h	ICU	Interrupt Request Register 064	IR064	8	8	2 ICLK			
0008 7041h	ICU	Interrupt Request Register 065	IR065	8	8	2 ICLK			
0008 7042h	ICU	Interrupt Request Register 066	IR066	8	8	2 ICLK			
0008 7043h	ICU	Interrupt Request Register 067	IR067	8	8	2 ICLK			
0008 7044h	ICU	Interrupt Request Register 068	IR068	8	8	2 ICLK			
0008 7045h	ICU	Interrupt Request Register 069	IR069	8	8	2 ICLK			
0008 7046h	ICU	Interrupt Request Register 070	IR070	8	8	2 ICLK			Not present in versions with 64 or 48 pins.
0008 7047h	ICU	Interrupt Request Register 071	IR071	8	8	2 ICLK			Not present in versions with 64 or 48 pins.
0008 705Ah	ICU	Interrupt Request Register 090	IR090	8	8	2 ICLK			Not present in versions with 112, 100, 64 or 48 pins.
0008 7062h	ICU	Interrupt Request Register 098	IR098	8	8	2 ICLK			Not present in versions with 64 or 48 pins.
0008 7066h	ICU	Interrupt Request Register 102	IR102	8	8	2 ICLK			
0008 7067h	ICU	Interrupt Request Register 103	IR103	8	8	2 ICLK			
0008 7068h	ICU	Interrupt Request Register 104	IR104	8	8	2 ICLK			Not present in versions with 64 or 48 pins.
0008 7069h	ICU	Interrupt Request Register 105	IR105	8	8	2 ICLK			Not present in versions with 64 or 48 pins.
0008 706Ah	ICU	Interrupt Request Register 106	IR106	8	8	2 ICLK			Not present in versions with 64 or 48 pins.
0008 7072h	ICU	Interrupt Request Register 114	IR114	8	8	2 ICLK			
0008 707Ah	ICU	Interrupt Request Register 122	IR122	8	8	2 ICLK			
0008 707Bh	ICU	Interrupt Request Register 123	IR123	8	8	2 ICLK			
0008 707Ch	ICU	Interrupt Request Register 124	IR124	8	8	2 ICLK			
0008 707Dh	ICU	Interrupt Request Register 125	IR125	8	8	2 ICLK			
0008 707Eh	ICU	Interrupt Request Register 126	IR126	8	8	2 ICLK			
0008 707Fh	ICU	Interrupt Request Register 127	IR127	8	8	2 ICLK			
0008 7080h	ICU	Interrupt Request Register 128	IR128	8	8	2 ICLK			
0008 7081h	ICU	Interrupt Request Register 129	IR129	8	8	2 ICLK			
0008 7082h	ICU	Interrupt Request Register 130	IR130	8	8	2 ICLK			
0008 7083h	ICU	Interrupt Request Register 131	IR131	8	8	2 ICLK			
0008 7084h	ICU	Interrupt Request Register 132	IR132	8	8	2 ICLK			
0008 7085h	ICU	Interrupt Request Register 133	IR133	8	8	2 ICLK			
0008 7086h	ICU	Interrupt Request Register 134	IR134	8	8	2 ICLK			
0008 7087h	ICU	Interrupt Request Register 135	IR135	8	8	2 ICLK			
0008 7088h	ICU	Interrupt Request Register 136	IR136	8	8	2 ICLK			
0008 7089h	ICU	Interrupt Request Register 137	IR137	8	8	2 ICLK			
0008 708Ah	ICU	Interrupt Request Register 138	IR138	8	8	2 ICLK			
0008 708Bh	ICU	Interrupt Request Register 139	IR139	8	8	2 ICLK			
0008 708Ch	ICU	Interrupt Request Register 140	IR140	8	8	2 ICLK			
0008 708Dh	ICU	Interrupt Request Register 141	IR141	8	8	2 ICLK			
0008 708Eh	ICU	Interrupt Request Register 142	IR142	8	8	2 ICLK			
0008 708Fh	ICU	Interrupt Request Register 143	IR143	8	8	2 ICLK			
0008 7090h	ICU	Interrupt Request Register 144	IR144	8	8	2 ICLK			
0008 7091h	ICU	Interrupt Request Register 145	IR145	8	8	2 ICLK			
0008 7092h	ICU	Interrupt Request Register 146	IR146	8	8	2 ICLK			
0008 7093h	ICU	Interrupt Request Register 147	IR147	8	8	2 ICLK			
0008 7094h	ICU	Interrupt Request Register 148	IR148	8	8	2 ICLK			
0008 7095h	ICU	Interrupt Request Register 149	IR149	8	8	2 ICLK			
0008 7096h	ICU	Interrupt Request Register 150	IR150	8	8	2 ICLK			
0008 7097h	ICU	Interrupt Request Register 151	IR151	8	8	2 ICLK			

Downloaded from Arrow.com.

Table 4.1 List of I/O Registers (Address Order) (6/48)

Address	Module Symbol	Register Name	Register Symbol	Number of Bits	Access Size	Number of Access States		Module Name	Remarks
						ICLK ≥ PCLK	ICLK < PCLK		
0008 7098h	ICU	Interrupt Request Register 152	IR152	8	8	2 ICLK		ICUb	
0008 7099h	ICU	Interrupt Request Register 153	IR153	8	8	2 ICLK			
0008 709Ah	ICU	Interrupt Request Register 154	IR154	8	8	2 ICLK			
0008 709Bh	ICU	Interrupt Request Register 155	IR155	8	8	2 ICLK			
0008 709Ch	ICU	Interrupt Request Register 156	IR156	8	8	2 ICLK			
0008 709Dh	ICU	Interrupt Request Register 157	IR157	8	8	2 ICLK			
0008 709Eh	ICU	Interrupt Request Register 158	IR158	8	8	2 ICLK			
0008 70A1h	ICU	Interrupt Request Register 161	IR161	8	8	2 ICLK			
0008 70A2h	ICU	Interrupt Request Register 162	IR162	8	8	2 ICLK			
0008 70A3h	ICU	Interrupt Request Register 163	IR163	8	8	2 ICLK			
0008 70A4h	ICU	Interrupt Request Register 164	IR164	8	8	2 ICLK			
0008 70A5h	ICU	Interrupt Request Register 165	IR165	8	8	2 ICLK			
0008 70A6h	ICU	Interrupt Request Register 166	IR166	8	8	2 ICLK			
0008 70A7h	ICU	Interrupt Request Register 167	IR167	8	8	2 ICLK			Not present in versions with 64 or 48 pins.
0008 70A8h	ICU	Interrupt Request Register 168	IR168	8	8	2 ICLK			
0008 70A9h	ICU	Interrupt Request Register 169	IR169	8	8	2 ICLK			
0008 70AAh	ICU	Interrupt Request Register 170	IR170	8	8	2 ICLK			Not present in versions with 64 or 48 pins.
0008 70ABh	ICU	Interrupt Request Register 171	IR171	8	8	2 ICLK			
0008 70ACh	ICU	Interrupt Request Register 172	IR172	8	8	2 ICLK			
0008 70ADh	ICU	Interrupt Request Register 173	IR173	8	8	2 ICLK			
0008 70AEh	ICU	Interrupt Request Register 174	IR174	8	8	2 ICLK			Not present in versions with 64 or 48 pins.
0008 70AFh	ICU	Interrupt Request Register 175	IR175	8	8	2 ICLK			Not present in versions with 64 or 48 pins.
0008 70B0h	ICU	Interrupt Request Register 176	IR176	8	8	2 ICLK			Not present in versions with 64 or 48 pins.
0008 70B1h	ICU	Interrupt Request Register 177	IR177	8	8	2 ICLK			Not present in versions with 64 or 48 pins.
0008 70B2h	ICU	Interrupt Request Register 178	IR178	8	8	2 ICLK			Not present in versions with 64 or 48 pins.
0008 70B3h	ICU	Interrupt Request Register 179	IR179	8	8	2 ICLK			Not present in versions with 64 or 48 pins.
0008 70B4h	ICU	Interrupt Request Register 180	IR180	8	8	2 ICLK			Not present in versions with 64 or 48 pins.
0008 70B5h	ICU	Interrupt Request Register 181	IR181	8	8	2 ICLK			Not present in versions with 64 or 48 pins.
0008 70B6h	ICU	Interrupt Request Register 182	IR182	8	8	2 ICLK			Not present in versions with 64 or 48 pins.
0008 70B7h	ICU	Interrupt Request Register 183	IR183	8	8	2 ICLK			Not present in versions with 64 or 48 pins.
0008 70B8h	ICU	Interrupt Request Register 184	IR184	8	8	2 ICLK			Not present in versions with 64 or 48 pins.
0008 70B9h	ICU	Interrupt Request Register 185	IR185	8	8	2 ICLK			Not present in versions with 64 or 48 pins.
0008 70BAh	ICU	Interrupt Request Register 186	IR186	8	8	2 ICLK			Not present in versions with 64 or 48 pins.
0008 70BBh	ICU	Interrupt Request Register 187	IR187	8	8	2 ICLK			Not present in versions with 64 or 48 pins.
0008 70BCh	ICU	Interrupt Request Register 188	IR188	8	8	2 ICLK			Not present in versions with 64 or 48 pins.
0008 70BDh	ICU	Interrupt Request Register 189	IR189	8	8	2 ICLK			Not present in versions with 64 or 48 pins.
0008 70BEh	ICU	Interrupt Request Register 190	IR190	8	8	2 ICLK			Not present in versions with 112, 100, 64 or 48 pins.
0008 70BFh	ICU	Interrupt Request Register 191	IR191	8	8	2 ICLK			Not present in versions with 112, 100, 64 or 48 pins.

Downloaded from Arrow.com.

Table 4.1 List of I/O Registers (Address Order) (7/48)

Address	Module Symbol	Register Name	Register Symbol	Number of Bits	Access Size	Number of Access States		Module Name	Remarks
						ICLK ≥ PCLK	ICLK < PCLK		
0008 70C0h	ICU	Interrupt Request Register 192	IR192	8	8	2 ICLK		ICUb	Not present in versions with 112, 100, 64 or 48 pins.
0008 70C1h	ICU	Interrupt Request Register 193	IR193	8	8	2 ICLK			Not present in versions with 112, 100, 64 or 48 pins.
0008 70C2h	ICU	Interrupt Request Register 194	IR194	8	8	2 ICLK			
0008 70C3h	ICU	Interrupt Request Register 195	IR195	8	8	2 ICLK			
0008 70C4h	ICU	Interrupt Request Register 196	IR196	8	8	2 ICLK			
0008 70C5h	ICU	Interrupt Request Register 197	IR197	8	8	2 ICLK			
0008 70C6h	ICU	Interrupt Request Register 198	IR198	8	8	2 ICLK			
0008 70C7h	ICU	Interrupt Request Register 199	IR199	8	8	2 ICLK			
0008 70C8h	ICU	Interrupt Request Register 200	IR200	8	8	2 ICLK			
0008 70C9h	ICU	Interrupt Request Register 201	IR201	8	8	2 ICLK			
0008 70D6h	ICU	Interrupt Request Register 214	IR214	8	8	2 ICLK			
0008 70D7h	ICU	Interrupt Request Register 215	IR215	8	8	2 ICLK			
0008 70D8h	ICU	Interrupt Request Register 216	IR216	8	8	2 ICLK			
0008 70D9h	ICU	Interrupt Request Register 217	IR217	8	8	2 ICLK			
0008 70DAh	ICU	Interrupt Request Register 218	IR218	8	8	2 ICLK			
0008 70DBh	ICU	Interrupt Request Register 219	IR219	8	8	2 ICLK			
0008 70DCh	ICU	Interrupt Request Register 220	IR220	8	8	2 ICLK			Not present in versions with 64 or 48 pins.
0008 70DDh	ICU	Interrupt Request Register 221	IR221	8	8	2 ICLK			Not present in versions with 64 or 48 pins.
0008 70DEh	ICU	Interrupt Request Register 222	IR222	8	8	2 ICLK			Not present in versions with 64 or 48 pins.
0008 70DFh	ICU	Interrupt Request Register 223	IR223	8	8	2 ICLK			Not present in versions with 100, 64 or 48 pins.
0008 70E0h	ICU	Interrupt Request Register 224	IR224	8	8	2 ICLK			Not present in versions with 100, 64 or 48 pins.
0008 70E1h	ICU	Interrupt Request Register 225	IR225	8	8	2 ICLK			Not present in versions with 100, 64 or 48 pins.
0008 70E2h	ICU	Interrupt Request Register 226	IR226	8	8	2 ICLK			
0008 70E3h	ICU	Interrupt Request Register 227	IR227	8	8	2 ICLK			
0008 70E4h	ICU	Interrupt Request Register 228	IR228	8	8	2 ICLK			
0008 70E5h	ICU	Interrupt Request Register 229	IR229	8	8	2 ICLK			
0008 70E6h	ICU	Interrupt Request Register 230	IR230	8	8	2 ICLK			
0008 70E7h	ICU	Interrupt Request Register 231	IR231	8	8	2 ICLK			
0008 70E8h	ICU	Interrupt Request Register 232	IR232	8	8	2 ICLK			
0008 70E9h	ICU	Interrupt Request Register 233	IR233	8	8	2 ICLK			
0008 70EAh	ICU	Interrupt Request Register 234	IR234	8	8	2 ICLK			
0008 70EBh	ICU	Interrupt Request Register 235	IR235	8	8	2 ICLK			
0008 70ECh	ICU	Interrupt Request Register 236	IR236	8	8	2 ICLK			
0008 70EEh	ICU	Interrupt Request Register 238	IR238	8	8	2 ICLK			
0008 70EFh	ICU	Interrupt Request Register 239	IR239	8	8	2 ICLK			
0008 70F0h	ICU	Interrupt Request Register 240	IR240	8	8	2 ICLK			
0008 70F1h	ICU	Interrupt Request Register 241	IR241	8	8	2 ICLK			
0008 70F2h	ICU	Interrupt Request Register 242	IR242	8	8	2 ICLK			
0008 70F4h	ICU	Interrupt Request Register 244	IR244	8	8	2 ICLK			
0008 70F5h	ICU	Interrupt Request Register 245	IR245	8	8	2 ICLK			
0008 70F6h	ICU	Interrupt Request Register 246	IR246	8	8	2 ICLK			
0008 70F7h	ICU	Interrupt Request Register 247	IR247	8	8	2 ICLK			
0008 70F8h	ICU	Interrupt Request Register 248	IR248	8	8	2 ICLK			
0008 70FAh	ICU	Interrupt Request Register 250	IR250	8	8	2 ICLK			
0008 70FBh	ICU	Interrupt Request Register 251	IR251	8	8	2 ICLK			
0008 70FCh	ICU	Interrupt Request Register 252	IR252	8	8	2 ICLK			

Downloaded from Arrow.com.

Table 4.1 List of I/O Registers (Address Order) (8/48)

Address	Module Symbol	Register Name	Register Symbol	Number of Bits	Access Size	Number of Access States		Module Name	Remarks
						ICLK ≥ PCLK	ICLK < PCLK		
0008 711Bh	ICU	DTC Activation Enable Register 027	DTCER027	8	8	2 ICLK		ICUb	
0008 711Ch	ICU	DTC Activation Enable Register 028	DTCER028	8	8	2 ICLK			
0008 711Dh	ICU	DTC Activation Enable Register 029	DTCER029	8	8	2 ICLK			
0008 711Eh	ICU	DTC Activation Enable Register 030	DTCER030	8	8	2 ICLK			
0008 711Fh	ICU	DTC Activation Enable Register 031	DTCER031	8	8	2 ICLK			
0008 7121h	ICU	DTC Activation Enable Register 033	DTCER033	8	8	2 ICLK			Not present in versions with 112, 100, 64 or 48 pins.
0008 7122h	ICU	DTC Activation Enable Register 034	DTCER034	8	8	2 ICLK			Not present in versions with 112, 100, 64 or 48 pins.
0008 7127h	ICU	DTC Activation Enable Register 039	DTCER039	8	8	2 ICLK			
0008 7128h	ICU	DTC Activation Enable Register 040	DTCER040	8	8	2 ICLK			
0008 712Ah	ICU	DTC Activation Enable Register 042	DTCER042	8	8	2 ICLK			Not present in versions with 64 or 48 pins.
0008 712Bh	ICU	DTC Activation Enable Register 043	DTCER043	8	8	2 ICLK			Not present in versions with 64 or 48 pins.
0008 7131h	ICU	DTC Activation Enable Register 049	DTCER049	8	8	2 ICLK			Not present in versions with 64 or 48 pins.
0008 7132h	ICU	DTC Activation Enable Register 050	DTCER050	8	8	2 ICLK			Not present in versions with 64 or 48 pins.
0008 7133h	ICU	DTC Activation Enable Register 051	DTCER051	8	8	2 ICLK			Not present in versions with 64 or 48 pins.
0008 7134h	ICU	DTC Activation Enable Register 052	DTCER052	8	8	2 ICLK			Not present in versions with 64 or 48 pins.
0008 7135h	ICU	DTC Activation Enable Register 053	DTCER053	8	8	2 ICLK			Not present in versions with 64 or 48 pins.
0008 7136h	ICU	DTC Activation Enable Register 054	DTCER054	8	8	2 ICLK			Not present in versions with 64 or 48 pins.
0008 7137h	ICU	DTC Activation Enable Register 055	DTCER055	8	8	2 ICLK			Not present in versions with 64 or 48 pins.
0008 7138h	ICU	DTC Activation Enable Register 056	DTCER056	8	8	2 ICLK			Not present in versions with 64 or 48 pins.
0008 713Ah	ICU	DTC Activation Enable Register 058	DTCER058	8	8	2 ICLK			Not present in versions with 64 or 48 pins.
0008 713Bh	ICU	DTC Activation Enable Register 059	DTCER059	8	8	2 ICLK			Not present in versions with 64 or 48 pins.
0008 713Ch	ICU	DTC Activation Enable Register 060	DTCER060	8	8	2 ICLK			Not present in versions with 64 or 48 pins.
0008 713Dh	ICU	DTC Activation Enable Register 061	DTCER061	8	8	2 ICLK			Not present in versions with 64 or 48 pins.
0008 713Eh	ICU	DTC Activation Enable Register 062	DTCER062	8	8	2 ICLK			Not present in versions with 64 or 48 pins.
0008 7140h	ICU	DTC Activation Enable Register 064	DTCER064	8	8	2 ICLK			
0008 7141h	ICU	DTC Activation Enable Register 065	DTCER065	8	8	2 ICLK			
0008 7142h	ICU	DTC Activation Enable Register 066	DTCER066	8	8	2 ICLK			
0008 7143h	ICU	DTC Activation Enable Register 067	DTCER067	8	8	2 ICLK			
0008 7144h	ICU	DTC Activation Enable Register 068	DTCER068	8	8	2 ICLK			
0008 7145h	ICU	DTC Activation Enable Register 069	DTCER069	8	8	2 ICLK			
0008 7146h	ICU	DTC Activation Enable Register 070	DTCER070	8	8	2 ICLK			Not present in versions with 64 or 48 pins.
0008 7147h	ICU	DTC Activation Enable Register 071	DTCER071	8	8	2 ICLK			Not present in versions with 64 or 48 pins.
0008 7162h	ICU	DTC Activation Enable Register 098	DTCER098	8	8	2 ICLK			Not present in versions with 64 or 48 pins.
0008 7166h	ICU	DTC Activation Enable Register 102	DTCER102	8	8	2 ICLK			
0008 7167h	ICU	DTC Activation Enable Register 103	DTCER103	8	8	2 ICLK			
0008 7168h	ICU	DTC Activation Enable Register 104	DTCER104	8	8	2 ICLK			Not present in versions with 64 or 48 pins.
0008 7169h	ICU	DTC Activation Enable Register 105	DTCER105	8	8	2 ICLK			Not present in versions with 64 or 48 pins.
0008 717Eh	ICU	DTC Activation Enable Register 126	DTCER126	8	8	2 ICLK			

Downloaded from Arrow.com.

Table 4.1 List of I/O Registers (Address Order) (9/48)

Address	Module Symbol	Register Name	Register Symbol	Number of Bits	Access Size	Number of Access States		Module Name	Remarks
						ICLK ≥ PCLK	ICLK < PCLK		
0008 717Fh	ICU	DTC Activation Enable Register 127	DTCER127	8	8	2 ICLK		ICUb	
0008 7180h	ICU	DTC Activation Enable Register 128	DTCER128	8	8	2 ICLK			
0008 7181h	ICU	DTC Activation Enable Register 129	DTCER129	8	8	2 ICLK			
0008 7185h	ICU	DTC Activation Enable Register 133	DTCER133	8	8	2 ICLK			
0008 7186h	ICU	DTC Activation Enable Register 134	DTCER134	8	8	2 ICLK			
0008 7189h	ICU	DTC Activation Enable Register 137	DTCER137	8	8	2 ICLK			
0008 718Ah	ICU	DTC Activation Enable Register 138	DTCER138	8	8	2 ICLK			
0008 718Dh	ICU	DTC Activation Enable Register 141	DTCER141	8	8	2 ICLK			
0008 718Eh	ICU	DTC Activation Enable Register 142	DTCER142	8	8	2 ICLK			
0008 718Fh	ICU	DTC Activation Enable Register 143	DTCER143	8	8	2 ICLK			
0008 7190h	ICU	DTC Activation Enable Register 144	DTCER144	8	8	2 ICLK			
0008 7192h	ICU	DTC Activation Enable Register 146	DTCER146	8	8	2 ICLK			
0008 7193h	ICU	DTC Activation Enable Register 147	DTCER147	8	8	2 ICLK			
0008 7194h	ICU	DTC Activation Enable Register 148	DTCER148	8	8	2 ICLK			
0008 7195h	ICU	DTC Activation Enable Register 149	DTCER149	8	8	2 ICLK			
0008 7196h	ICU	DTC Activation Enable Register 150	DTCER150	8	8	2 ICLK			
0008 7197h	ICU	DTC Activation Enable Register 151	DTCER151	8	8	2 ICLK			
0008 7198h	ICU	DTC Activation Enable Register 152	DTCER152	8	8	2 ICLK			
0008 7199h	ICU	DTC Activation Enable Register 153	DTCER153	8	8	2 ICLK			
0008 719Ah	ICU	DTC Activation Enable Register 154	DTCER154	8	8	2 ICLK			
0008 719Bh	ICU	DTC Activation Enable Register 155	DTCER155	8	8	2 ICLK			
0008 719Ch	ICU	DTC Activation Enable Register 156	DTCER156	8	8	2 ICLK			
0008 719Dh	ICU	DTC Activation Enable Register 157	DTCER157	8	8	2 ICLK			
0008 71A1h	ICU	DTC Activation Enable Register 161	DTCER161	8	8	2 ICLK			
0008 71A2h	ICU	DTC Activation Enable Register 162	DTCER162	8	8	2 ICLK			
0008 71A3h	ICU	DTC Activation Enable Register 163	DTCER163	8	8	2 ICLK			
0008 71A4h	ICU	DTC Activation Enable Register 164	DTCER164	8	8	2 ICLK			
0008 71A5h	ICU	DTC Activation Enable Register 165	DTCER165	8	8	2 ICLK			
0008 71ABh	ICU	DTC Activation Enable Register 171	DTCER171	8	8	2 ICLK			
0008 71ACh	ICU	DTC Activation Enable Register 172	DTCER172	8	8	2 ICLK			
0008 71ADh	ICU	DTC Activation Enable Register 173	DTCER173	8	8	2 ICLK			
0008 71AEh	ICU	DTC Activation Enable Register 174	DTCER174	8	8	2 ICLK			Not present in versions with 64 or 48 pins.
0008 71AFh	ICU	DTC Activation Enable Register 175	DTCER175	8	8	2 ICLK			Not present in versions with 64 or 48 pins.
0008 71B0h	ICU	DTC Activation Enable Register 176	DTCER176	8	8	2 ICLK			Not present in versions with 64 or 48 pins.
0008 71B1h	ICU	DTC Activation Enable Register 177	DTCER177	8	8	2 ICLK			Not present in versions with 64 or 48 pins.
0008 71B2h	ICU	DTC Activation Enable Register 178	DTCER178	8	8	2 ICLK			Not present in versions with 64 or 48 pins.
0008 71B3h	ICU	DTC Activation Enable Register 179	DTCER179	8	8	2 ICLK			Not present in versions with 64 or 48 pins.
0008 71B4h	ICU	DTC Activation Enable Register 180	DTCER180	8	8	2 ICLK			Not present in versions with 64 or 48 pins.
0008 71B5h	ICU	DTC Activation Enable Register 181	DTCER181	8	8	2 ICLK			Not present in versions with 64 or 48 pins.
0008 71B6h	ICU	DTC Activation Enable Register 182	DTCER182	8	8	2 ICLK			Not present in versions with 64 or 48 pins.
0008 71B7h	ICU	DTC Activation Enable Register 183	DTCER183	8	8	2 ICLK			Not present in versions with 64 or 48 pins.
0008 71B8h	ICU	DTC Activation Enable Register 184	DTCER184	8	8	2 ICLK			Not present in versions with 64 or 48 pins.
0008 71B9h	ICU	DTC Activation Enable Register 185	DTCER185	8	8	2 ICLK			Not present in versions with 64 or 48 pins.
0008 71BAh	ICU	DTC Activation Enable Register 186	DTCER186	8	8	2 ICLK			Not present in versions with 64 or 48 pins.

Downloaded from Arrow.com.

Table 4.1 List of I/O Registers (Address Order) (10/48)

Address	Module Symbol	Register Name	Register Symbol	Number of Bits	Access Size	Number of Access States		Module Name	Remarks
						ICLK ≥ PCLK	ICLK < PCLK		
0008 71BBh	ICU	DTC Activation Enable Register 187	DTCER187	8	8	2 ICLK		ICUb	Not present in versions with 64 or 48 pins.
0008 71BCh	ICU	DTC Activation Enable Register 188	DTCER188	8	8	2 ICLK			Not present in versions with 64 or 48 pins.
0008 71BDh	ICU	DTC Activation Enable Register 189	DTCER189	8	8	2 ICLK			Not present in versions with 64 or 48 pins.
0008 71BFh	ICU	DTC Activation Enable Register 191	DTCER191	8	8	2 ICLK			Not present in versions with 112, 100, 64 or 48 pins.
0008 71C0h	ICU	DTC Activation Enable Register 192	DTCER192	8	8	2 ICLK			Not present in versions with 112, 100, 64 or 48 pins.
0008 71C3h	ICU	DTC Activation Enable Register 195	DTCER195	8	8	2 ICLK			
0008 71C4h	ICU	DTC Activation Enable Register 196	DTCER196	8	8	2 ICLK			
0008 71C6h	ICU	DTC Activation Enable Register 198	DTCER198	8	8	2 ICLK			
0008 71C7h	ICU	DTC Activation Enable Register 199	DTCER199	8	8	2 ICLK			
0008 71C8h	ICU	DTC Activation Enable Register 200	DTCER200	8	8	2 ICLK			
0008 71C9h	ICU	DTC Activation Enable Register 201	DTCER201	8	8	2 ICLK			
0008 71D6h	ICU	DTC Activation Enable Register 214	DTCER214	8	8	2 ICLK			
0008 71D7h	ICU	DTC Activation Enable Register 215	DTCER215	8	8	2 ICLK			
0008 71D9h	ICU	DTC Activation Enable Register 217	DTCER217	8	8	2 ICLK			
0008 71DAh	ICU	DTC Activation Enable Register 218	DTCER218	8	8	2 ICLK			
0008 71DCh	ICU	DTC Activation Enable Register 220	DTCER220	8	8	2 ICLK			Not present in versions with 64 or 48 pins.
0008 71DDh	ICU	DTC Activation Enable Register 221	DTCER221	8	8	2 ICLK			Not present in versions with 64 or 48 pins.
0008 71DFh	ICU	DTC Activation Enable Register 223	DTCER223	8	8	2 ICLK			Not present in versions with 100, 64 or 48 pins.
0008 71E0h	ICU	DTC Activation Enable Register 224	DTCER224	8	8	2 ICLK			Not present in versions with 100, 64 or 48 pins.
0008 71E2h	ICU	DTC Activation Enable Register 226	DTCER226	8	8	2 ICLK			
0008 71E3h	ICU	DTC Activation Enable Register 227	DTCER227	8	8	2 ICLK			
0008 71E4h	ICU	DTC Activation Enable Register 228	DTCER228	8	8	2 ICLK			
0008 71E5h	ICU	DTC Activation Enable Register 229	DTCER229	8	8	2 ICLK			
0008 71E6h	ICU	DTC Activation Enable Register 230	DTCER230	8	8	2 ICLK			
0008 71E7h	ICU	DTC Activation Enable Register 231	DTCER231	8	8	2 ICLK			
0008 71E8h	ICU	DTC Activation Enable Register 232	DTCER232	8	8	2 ICLK			
0008 71E9h	ICU	DTC Activation Enable Register 233	DTCER233	8	8	2 ICLK			
0008 71EAh	ICU	DTC Activation Enable Register 234	DTCER234	8	8	2 ICLK			
0008 71EBh	ICU	DTC Activation Enable Register 235	DTCER235	8	8	2 ICLK			
0008 71ECh	ICU	DTC Activation Enable Register 236	DTCER236	8	8	2 ICLK			
0008 71EEh	ICU	DTC Activation Enable Register 238	DTCER238	8	8	2 ICLK			
0008 71EFh	ICU	DTC Activation Enable Register 239	DTCER239	8	8	2 ICLK			
0008 71F0h	ICU	DTC Activation Enable Register 240	DTCER240	8	8	2 ICLK			
0008 71F1h	ICU	DTC Activation Enable Register 241	DTCER241	8	8	2 ICLK			
0008 71F2h	ICU	DTC Activation Enable Register 242	DTCER242	8	8	2 ICLK			
0008 71F4h	ICU	DTC Activation Enable Register 244	DTCER244	8	8	2 ICLK			
0008 71F5h	ICU	DTC Activation Enable Register 245	DTCER245	8	8	2 ICLK			
0008 71F6h	ICU	DTC Activation Enable Register 246	DTCER246	8	8	2 ICLK			
0008 71F7h	ICU	DTC Activation Enable Register 247	DTCER247	8	8	2 ICLK			
0008 71F8h	ICU	DTC Activation Enable Register 248	DTCER248	8	8	2 ICLK			
0008 71FAh	ICU	DTC Activation Enable Register 250	DTCER250	8	8	2 ICLK			
0008 71FBh	ICU	DTC Activation Enable Register 251	DTCER251	8	8	2 ICLK			
0008 7202h	ICU	Interrupt Request Enable Register 02	IER02	8	8	2 ICLK			
0008 7203h	ICU	Interrupt Request Enable Register 03	IER03	8	8	2 ICLK			
0008 7204h	ICU	Interrupt Request Enable Register 04	IER04	8	8	2 ICLK			
0008 7205h	ICU	Interrupt Request Enable Register 05	IER05	8	8	2 ICLK			

Downloaded from Arrow.com.

Table 4.1 List of I/O Registers (Address Order) (11/48)

Address	Module Symbol	Register Name	Register Symbol	Number of Bits	Access Size	Number of Access States		Module Name	Remarks
						ICLK ≥ PCLK	ICLK < PCLK		
0008 7206h	ICU	Interrupt Request Enable Register 06	IER06	8	8	2 ICLK		ICUb	Not present in versions with 64 or 48 pins.
0008 7207h	ICU	Interrupt Request Enable Register 07	IER07	8	8	2 ICLK			
0008 7208h	ICU	Interrupt Request Enable Register 08	IER08	8	8	2 ICLK			
0008 720Bh	ICU	Interrupt Request Enable Register 0B	IER0B	8	8	2 ICLK			Not present in versions with 112, 100, 64 or 48 pins.
0008 720Ch	ICU	Interrupt Request Enable Register 0C	IER0C	8	8	2 ICLK			
0008 720Dh	ICU	Interrupt Request Enable Register 0D	IER0D	8	8	2 ICLK			Not present in versions with 64 or 48 pins.
0008 720Eh	ICU	Interrupt Request Enable Register 0E	IER0E	8	8	2 ICLK			
0008 720Fh	ICU	Interrupt Request Enable Register 0F	IER0F	8	8	2 ICLK			
0008 7210h	ICU	Interrupt Request Enable Register 10	IER10	8	8	2 ICLK			
0008 7211h	ICU	Interrupt Request Enable Register 11	IER11	8	8	2 ICLK			
0008 7212h	ICU	Interrupt Request Enable Register 12	IER12	8	8	2 ICLK			
0008 7213h	ICU	Interrupt Request Enable Register 13	IER13	8	8	2 ICLK			
0008 7214h	ICU	Interrupt Request Enable Register 14	IER14	8	8	2 ICLK			
0008 7215h	ICU	Interrupt Request Enable Register 15	IER15	8	8	2 ICLK			
0008 7216h	ICU	Interrupt Request Enable Register 16	IER16	8	8	2 ICLK			Not present in versions with 64 or 48 pins.
0008 7217h	ICU	Interrupt Request Enable Register 17	IER17	8	8	2 ICLK			Not present in versions with 64 or 48 pins.
0008 7218h	ICU	Interrupt Request Enable Register 18	IER18	8	8	2 ICLK			
0008 7219h	ICU	Interrupt Request Enable Register 19	IER19	8	8	2 ICLK			
0008 721Ah	ICU	Interrupt Request Enable Register 1A	IER1A	8	8	2 ICLK			
0008 721Bh	ICU	Interrupt Request Enable Register 1B	IER1B	8	8	2 ICLK			
0008 721Ch	ICU	Interrupt Request Enable Register 1C	IER1C	8	8	2 ICLK			
0008 721Dh	ICU	Interrupt Request Enable Register 1D	IER1D	8	8	2 ICLK			
0008 721Eh	ICU	Interrupt Request Enable Register 1E	IER1E	8	8	2 ICLK			
0008 721Fh	ICU	Interrupt Request Enable Register 1F	IER1F	8	8	2 ICLK			
0008 72E0h	ICU	Software Interrupt Activation Register	SWINTR	8	8	2 ICLK			
0008 72F0h	ICU	Fast Interrupt Set Register	FIR	16	16	2 ICLK			
0008 7300h	ICU	Interrupt Source Priority Register 000	IPR000	8	8	2 ICLK			
0008 7301h	ICU	Interrupt Source Priority Register 001	IPR001	8	8	2 ICLK			
0008 7302h	ICU	Interrupt Source Priority Register 002	IPR002	8	8	2 ICLK			
0008 7303h	ICU	Interrupt Source Priority Register 003	IPR003	8	8	2 ICLK			
0008 7304h	ICU	Interrupt Source Priority Register 004	IPR004	8	8	2 ICLK			
0008 7305h	ICU	Interrupt Source Priority Register 005	IPR005	8	8	2 ICLK			
0008 7306h	ICU	Interrupt Source Priority Register 006	IPR006	8	8	2 ICLK			
0008 7307h	ICU	Interrupt Source Priority Register 007	IPR007	8	8	2 ICLK			
0008 7321h	ICU	Interrupt Source Priority Register 033	IPR033	8	8	2 ICLK			Not present in versions with 112, 100, 64 or 48 pins.
0008 7322h	ICU	Interrupt Source Priority Register 034	IPR034	8	8	2 ICLK			Not present in versions with 112, 100, 64 or 48 pins.
0008 7323h	ICU	Interrupt Source Priority Register 035	IPR035	8	8	2 ICLK			Not present in versions with 112, 100, 64 or 48 pins.
0008 7324h	ICU	Interrupt Source Priority Register 036	IPR036	8	8	2 ICLK			
0008 7327h	ICU	Interrupt Source Priority Register 039	IPR039	8	8	2 ICLK			
0008 7328h	ICU	Interrupt Source Priority Register 040	IPR040	8	8	2 ICLK			
0008 7329h	ICU	Interrupt Source Priority Register 041	IPR041	8	8	2 ICLK			
0008 732Ah	ICU	Interrupt Source Priority Register 042	IPR042	8	8	2 ICLK			Not present in versions with 64 or 48 pins.
0008 732B	ICU	Interrupt Source Priority Register 043	IPR043	8	8	2 ICLK			Not present in versions with 64 or 48 pins.

Downloaded from Arrow.com.

Table 4.1 List of I/O Registers (Address Order) (12/48)

Address	Module Symbol	Register Name	Register Symbol	Number of Bits	Access Size	Number of Access States		Module Name	Remarks
						ICLK ≥ PCLK	ICLK < PCLK		
0008 732C	ICU	Interrupt Source Priority Register 044	IPR044	8	8	2 ICLK		ICUb	Not present in versions with 64 or 48 pins.
0008 732Dh	ICU	Interrupt Source Priority Register 045	IPR045	8	8	2 ICLK			Not present in versions with 64 or 48 pins.
0008 7331h	ICU	Interrupt Source Priority Register 049	IPR049	8	8	2 ICLK			Not present in versions with 64 or 48 pins.
0008 7334h	ICU	Interrupt Source Priority Register 052	IPR052	8	8	2 ICLK			Not present in versions with 64 or 48 pins.
0008 7336h	ICU	Interrupt Source Priority Register 054	IPR054	8	8	2 ICLK			Not present in versions with 64 or 48 pins.
0008 7337h	ICU	Interrupt Source Priority Register 055	IPR055	8	8	2 ICLK			Not present in versions with 64 or 48 pins.
0008 7338h	ICU	Interrupt Source Priority Register 056	IPR056	8	8	2 ICLK			Not present in versions with 64 or 48 pins.
0008 7339h	ICU	Interrupt Source Priority Register 057	IPR057	8	8	2 ICLK			
0008 733Ah	ICU	Interrupt Source Priority Register 058	IPR058	8	8	2 ICLK			Not present in versions with 64 or 48 pins.
0008 733Bh	ICU	Interrupt Source Priority Register 059	IPR059	8	8	2 ICLK			Not present in versions with 64 or 48 pins.
0008 733Ch	ICU	Interrupt Source Priority Register 060	IPR060	8	8	2 ICLK			Not present in versions with 64 or 48 pins.
0008 733Dh	ICU	Interrupt Source Priority Register 061	IPR061	8	8	2 ICLK			Not present in versions with 64 or 48 pins.
0008 733Eh	ICU	Interrupt Source Priority Register 062	IPR062	8	8	2 ICLK			Not present in versions with 64 or 48 pins.
0008 7340h	ICU	Interrupt Source Priority Register 064	IPR064	8	8	2 ICLK			
0008 7341h	ICU	Interrupt Source Priority Register 065	IPR065	8	8	2 ICLK			
0008 7342h	ICU	Interrupt Source Priority Register 066	IPR066	8	8	2 ICLK			
0008 7343h	ICU	Interrupt Source Priority Register 067	IPR067	8	8	2 ICLK			
0008 7344h	ICU	Interrupt Source Priority Register 068	IPR068	8	8	2 ICLK			
0008 7345h	ICU	Interrupt Source Priority Register 069	IPR069	8	8	2 ICLK			
0008 7346h	ICU	Interrupt Source Priority Register 070	IPR070	8	8	2 ICLK			Not present in versions with 64 or 48 pins.
0008 7347h	ICU	Interrupt Source Priority Register 071	IPR071	8	8	2 ICLK			Not present in versions with 64 or 48 pins.
0008 735Ah	ICU	Interrupt Source Priority Register 090	IPR090	8	8	2 ICLK			Not present in versions with 112, 100, 64 or 48 pins.
0008 7362h	ICU	Interrupt Source Priority Register 098	IPR098	8	8	2 ICLK			Not present in versions with 64 or 48 pins.
0008 7366h	ICU	Interrupt Source Priority Register 102	IPR102	8	8	2 ICLK			
0008 7367h	ICU	Interrupt Source Priority Register 103	IPR103	8	8	2 ICLK			
0008 7368h	ICU	Interrupt Source Priority Register 104	IPR104	8	8	2 ICLK			Not present in versions with 64 or 48 pins.
0008 7369h	ICU	Interrupt Source Priority Register 105	IPR105	8	8	2 ICLK			Not present in versions with 64 or 48 pins.
0008 736Ah	ICU	Interrupt Source Priority Register 106	IPR106	8	8	2 ICLK			Not present in versions with 64 or 48 pins.
0008 7372h	ICU	Interrupt Source Priority Register 114	IPR114	8	8	2 ICLK			
0008 737Ah	ICU	Interrupt Source Priority Register 122	IPR122	8	8	2 ICLK			
0008 737Eh	ICU	Interrupt Source Priority Register 126	IPR126	8	8	2 ICLK			
0008 7382h	ICU	Interrupt Source Priority Register 130	IPR130	8	8	2 ICLK			
0008 7385h	ICU	Interrupt Source Priority Register 133	IPR133	8	8	2 ICLK			
0008 7387h	ICU	Interrupt Source Priority Register 135	IPR135	8	8	2 ICLK			
0008 7389h	ICU	Interrupt Source Priority Register 137	IPR137	8	8	2 ICLK			
0008 738Bh	ICU	Interrupt Source Priority Register 139	IPR139	8	8	2 ICLK			
0008 738Dh	ICU	Interrupt Source Priority Register 141	IPR141	8	8	2 ICLK			
0008 7391h	ICU	Interrupt Source Priority Register 145	IPR145	8	8	2 ICLK			
0008 7392h	ICU	Interrupt Source Priority Register 146	IPR146	8	8	2 ICLK			
0008 7396h	ICU	Interrupt Source Priority Register 150	IPR150	8	8	2 ICLK			
0008 7397h	ICU	Interrupt Source Priority Register 151	IPR151	8	8	2 ICLK			

Downloaded from Arrow.com.

Table 4.1 List of I/O Registers (Address Order) (13/48)

Address	Module Symbol	Register Name	Register Symbol	Number of Bits	Access Size	Number of Access States		Module Name	Remarks
						ICLK ≥ PCLK	ICLK < PCLK		
0008 739Ah	ICU	Interrupt Source Priority Register 154	IPR154	8	8	2 ICLK		ICUb	
0008 739Eh	ICU	Interrupt Source Priority Register 158	IPR158	8	8	2 ICLK			
0008 73A1h	ICU	Interrupt Source Priority Register 161	IPR161	8	8	2 ICLK			
0008 73A3h	ICU	Interrupt Source Priority Register 163	IPR163	8	8	2 ICLK			
0008 73A5h	ICU	Interrupt Source Priority Register 165	IPR165	8	8	2 ICLK			
0008 73A6h	ICU	Interrupt Source Priority Register 166	IPR166	8	8	2 ICLK			
0008 73ABh	ICU	Interrupt Source Priority Register 171	IPR171	8	8	2 ICLK			
0008 73ACh	ICU	Interrupt Source Priority Register 172	IPR172	8	8	2 ICLK			
0008 73ADh	ICU	Interrupt Source Priority Register 173	IPR173	8	8	2 ICLK			
0008 73AEh	ICU	Interrupt Source Priority Register 174	IPR174	8	8	2 ICLK			Not present in versions with 64 or 48 pins.
0008 73B1h	ICU	Interrupt Source Priority Register 177	IPR177	8	8	2 ICLK			Not present in versions with 64 or 48 pins.
0008 73B4h	ICU	Interrupt Source Priority Register 180	IPR180	8	8	2 ICLK			Not present in versions with 64 or 48 pins.
0008 73B7h	ICU	Interrupt Source Priority Register 183	IPR183	8	8	2 ICLK			Not present in versions with 64 or 48 pins.
0008 73B9h	ICU	Interrupt Source Priority Register 185	IPR185	8	8	2 ICLK			Not present in versions with 64 or 48 pins.
0008 73BCh	ICU	Interrupt Source Priority Register 188	IPR188	8	8	2 ICLK			Not present in versions with 64 or 48 pins.
0008 73BEh	ICU	Interrupt Source Priority Register 190	IPR190	8	8	2 ICLK			Not present in versions with 112, 100, 64 or 48 pins.
0008 73C2h	ICU	Interrupt Source Priority Register 194	IPR194	8	8	2 ICLK			
0008 73C6h	ICU	Interrupt Source Priority Register 198	IPR198	8	8	2 ICLK			
0008 73C7h	ICU	Interrupt Source Priority Register 199	IPR199	8	8	2 ICLK			
0008 73C8h	ICU	Interrupt Source Priority Register 200	IPR200	8	8	2 ICLK			
0008 73C9h	ICU	Interrupt Source Priority Register 201	IPR201	8	8	2 ICLK			
0008 73D6h	ICU	Interrupt Source Priority Register 214	IPR214	8	8	2 ICLK			
0008 73D9h	ICU	Interrupt Source Priority Register 217	IPR217	8	8	2 ICLK			
0008 73DCh	ICU	Interrupt Source Priority Register 220	IPR220	8	8	2 ICLK			Not present in versions with 64 or 48 pins.
0008 73DFh	ICU	Interrupt Source Priority Register 223	IPR223	8	8	2 ICLK			Not present in versions with 100, 64 or 48 pins.
0008 73E2h	ICU	Interrupt Source Priority Register 226	IPR226	8	8	2 ICLK			
0008 73E5h	ICU	Interrupt Source Priority Register 229	IPR229	8	8	2 ICLK			
0008 73E8h	ICU	Interrupt Source Priority Register 232	IPR232	8	8	2 ICLK			
0008 73EBh	ICU	Interrupt Source Priority Register 235	IPR235	8	8	2 ICLK			
0008 73EEh	ICU	Interrupt Source Priority Register 238	IPR238	8	8	2 ICLK			
0008 73F1h	ICU	Interrupt Source Priority Register 241	IPR241	8	8	2 ICLK			
0008 73F4h	ICU	Interrupt Source Priority Register 244	IPR244	8	8	2 ICLK			
0008 73F7h	ICU	Interrupt Source Priority Register 247	IPR247	8	8	2 ICLK			
0008 73FAh	ICU	Interrupt Source Priority Register 250	IPR250	8	8	2 ICLK			
0008 7400h	ICU	DMAC Activation Request Select Register 0	DMRSR0	8	8	2 ICLK			
0008 7404h	ICU	DMAC Activation Request Select Register 1	DMRSR1	8	8	2 ICLK			
0008 7408h	ICU	DMAC Activation Request Select Register 2	DMRSR2	8	8	2 ICLK			
0008 740Ch	ICU	DMAC Activation Request Select Register 3	DMRSR3	8	8	2 ICLK			
0008 7500h	ICU	IRQ Control Register 0	IRQCR0	8	8	2 ICLK			
0008 7501h	ICU	IRQ Control Register 1	IRQCR1	8	8	2 ICLK			
0008 7502h	ICU	IRQ Control Register 2	IRQCR2	8	8	2 ICLK			
0008 7503h	ICU	IRQ Control Register 3	IRQCR3	8	8	2 ICLK			
0008 7504h	ICU	IRQ Control Register 4	IRQCR4	8	8	2 ICLK			
0008 7505h	ICU	IRQ Control Register 5	IRQCR5	8	8	2 ICLK			
0008 7506h	ICU	IRQ Control Register 6	IRQCR6	8	8	2 ICLK			Not present in versions with 64 or 48 pins.

Downloaded from Arrow.com.

Table 4.1 List of I/O Registers (Address Order) (14/48)

Address	Module Symbol	Register Name	Register Symbol	Number of Bits	Access Size	Number of Access States		Module Name	Remarks
						ICLK ≥ PCLK	ICLK < PCLK		
0008 7507h	ICU	IRQ Control Register 7	IRQCR7	8	8	2 ICLK		ICUb	Not present in versions with 64 or 48 pins.
0008 7510h	ICU	IRQ Pin Digital Filter Enable Register 0	IRQFLTE0	8	8	2 ICLK			
0008 7514h	ICU	IRQ Pin Digital Filter Setting Register 0	IRQFLTC0	16	16	2 ICLK			
0008 7580h	ICU	Non-Maskable Interrupt Status Register	NMISR	8	8	2 ICLK			
0008 7581h	ICU	Non-Maskable Interrupt Enable Register	NMIER	8	8	2 ICLK			
0008 7582h	ICU	Non-Maskable Interrupt Status Clear Register	NMICLR	8	8	2 ICLK			
0008 7583h	ICU	NMI Pin Interrupt Control Register	NMICR	8	8	2 ICLK			
0008 7590h	ICU	NMI Pin Digital Filter Enable Register	NMIFLTE	8	8	2 ICLK			
0008 7594h	ICU	NMI Pin Digital Filter Setting Register	NMIFLTC	8	8	2 ICLK			
0008 8000h	CMT	Compare Match Timer Start Register 0	CMSTR0	16	16	2, 3 PCLKB	2 ICLK	CMT	
0008 8002h	CMT0	Compare Match Timer Control Register	CMCR	16	16	2, 3 PCLKB	2 ICLK		
0008 8004h	CMT0	Compare Match Timer Counter	CMCNT	16	16	2, 3 PCLKB	2 ICLK		
0008 8006h	CMT0	Compare Match Timer Constant Register	CMCOR	16	16	2, 3 PCLKB	2 ICLK		
0008 8008h	CMT1	Compare Match Timer Control Register	CMCR	16	16	2, 3 PCLKB	2 ICLK		
0008 800Ah	CMT1	Compare Match Timer Counter	CMCNT	16	16	2, 3 PCLKB	2 ICLK		
0008 800Ch	CMT1	Compare Match Timer Constant Register	CMCOR	16	16	2, 3 PCLKB	2 ICLK		
0008 8010h	CMT	Compare Match Timer Start Register 1	CMSTR1	16	16	2, 3 PCLKB	2 ICLK		
0008 8012h	CMT2	Compare Match Timer Control Register	CMCR	16	16	2, 3 PCLKB	2 ICLK		
0008 8014h	CMT2	Compare Match Timer Counter	CMCNT	16	16	2, 3 PCLKB	2 ICLK		
0008 8016h	CMT2	Compare Match Timer Constant Register	CMCOR	16	16	2, 3 PCLKB	2 ICLK		
0008 8018h	CMT3	Compare Match Timer Control Register	CMCR	16	16	2, 3 PCLKB	2 ICLK		
0008 801Ah	CMT3	Compare Match Timer Counter	CMCNT	16	16	2, 3 PCLKB	2 ICLK		
0008 801Ch	CMT3	Compare Match Timer Constant Register	CMCOR	16	16	2, 3 PCLKB	2 ICLK		
0008 8020h	WDT	WDT Refresh Register	WDTRR	8	8	2, 3 PCLKB	2 ICLK	WDTA	
0008 8022h	WDT	WDT Control Register	WDTCR	16	16	2, 3 PCLKB	2 ICLK		
0008 8024h	WDT	WDT Status Register	WDTSR	16	16	2, 3 PCLKB	2 ICLK		
0008 8026h	WDT	WDT Reset Control Register	WDTRCR	8	8	2, 3 PCLKB	2 ICLK		
0008 8030h	IWDT	IWDT Refresh Register	IWDTRR	8	8	2, 3 PCLKB	2 ICLK	IWDTa	
0008 8032h	IWDT	IWDT Control Register	IWDTCR	16	16	2, 3 PCLKB	2 ICLK		
0008 8034h	IWDT	IWDT Status Register	IWDTSR	16	16	2, 3 PCLKB	2 ICLK		
0008 8036h	IWDT	IWDT Reset Control Register	IWDTRCR	8	8	2, 3 PCLKB	2 ICLK		
0008 8038h	IWDT	IWDT Count Stop Control Register	IWDTCSTPR	8	8	2, 3 PCLKB	2 ICLK		
0008 80C0h	DA	D/A Data Register 0	DADR0	16	16	2, 3 PCLKB	2 ICLK	DAa	Not present in versions with 64 or 48 pins.
0008 80C2h	DA	D/A Data Register 1	DADR1	16	16	2, 3 PCLKB	2 ICLK		Not present in versions with 64 or 48 pins.
0008 80C4h	DA	D/A Control Register	DACR	8	8	2, 3 PCLKB	2 ICLK		Not present in versions with 64 or 48 pins.
0008 80C5h	DA	DADRm Format Select Register	DADPR	8	8	2, 3 PCLKB	2 ICLK		Not present in versions with 64 or 48 pins.
0008 80C6h	DA	D/A A/D Synchronous Start Control Register	DAADSCR	8	8	2, 3 PCLKB	2 ICLK		Not present in versions with 64 or 48 pins.
0008 8280h	CRC	CRC Control Register	CRCCR	8	8	2, 3 PCLKB	2 ICLK	CRC	
0008 8281h	CRC	CRC Data Input Register	CRCDIR	8	8	2, 3 PCLKB	2 ICLK		
0008 8282h	CRC	CRC Data Output Register	CRCDOR	16	16	2, 3 PCLKB	2 ICLK		
0008 8300h	RIIC0	I^2C Bus Control Register 1	ICCR1	8	8	2, 3 PCLKB	2 ICLK	RIIC	
0008 8301h	RIIC0	I^2C Bus Control Register 2	ICCR2	8	8	2, 3 PCLKB	2 ICLK		
0008 8302h	RIIC0	I^2C Bus Mode Register 1	ICMR1	8	8	2, 3 PCLKB	2 ICLK		
0008 8303h	RIIC0	I^2C Bus Mode Register 2	ICMR2	8	8	2, 3 PCLKB	2 ICLK		
0008 8304h	RIIC0	I^2C Bus Mode Register 3	ICMR3	8	8	2, 3 PCLKB	2 ICLK		
0008 8305h	RIIC0	I^2C Bus Function Enable Register	ICFER	8	8	2, 3 PCLKB	2 ICLK		
0008 8306h	RIIC0	I^2C Bus Status Enable Register	ICSER	8	8	2, 3 PCLKB	2 ICLK		
0008 8307h	RIIC0	I^2C Bus Interrupt Enable Register	ICIER	8	8	2, 3 PCLKB	2 ICLK		

Downloaded from Arrow.com.

Table 4.1 List of I/O Registers (Address Order) (15/48)

Address	Module Symbol	Register Name	Register Symbol	Number of Bits	Access Size	Number of Access States		Module Name	Remarks
						ICLK ≥ PCLK	ICLK < PCLK		
0008 8308h	RIIC0	I²C Bus Status Register 1	ICSR1	8	8	2, 3 PCLKB	2 ICLK	RIIC	
0008 8309h	RIIC0	I²C Bus Status Register 2	ICSR2	8	8	2, 3 PCLKB	2 ICLK		
0008 830Ah	RIIC0	Slave Address Register L0	SARL0	8	8	2, 3 PCLKB	2 ICLK		
0008 830Ah	RIIC0	Timeout Internal Counter L	TMOCNTL	8	8	2, 3 PCLKB	2 ICLK		
0008 830Bh	RIIC0	Slave Address Register U0	SARU0	8	8	2, 3 PCLKB	2 ICLK		
0008 830Bh	RIIC0	Timeout Internal Counter U	TMOCNTU	8	8*2	2, 3 PCLKB	2 ICLK		
0008 830Ch	RIIC0	Slave Address Register L1	SARL1	8	8	2, 3 PCLKB	2 ICLK		
0008 830Dh	RIIC0	Slave Address Register U1	SARU1	8	8	2, 3 PCLKB	2 ICLK		
0008 830Eh	RIIC0	Slave Address Register L2	SARL2	8	8	2, 3 PCLKB	2 ICLK		
0008 830Fh	RIIC0	Slave Address Register U2	SARU2	8	8	2, 3 PCLKB	2 ICLK		
0008 8310h	RIIC0	I²C Bus Bit Rate Low-Level Register	ICBRL	8	8	2, 3 PCLKB	2 ICLK		
0008 8311h	RIIC0	I²C Bus Bit Rate High-Level Register	ICBRH	8	8	2, 3 PCLKB	2 ICLK		
0008 8312h	RIIC0	I²C Bus Transmit Data Register	ICDRT	8	8	2, 3 PCLKB	2 ICLK		
0008 8313h	RIIC0	I²C Bus Receive Data Register	ICDRR	8	8	2, 3 PCLKB	2 ICLK		
0008 8320h	RIIC1	I²C Bus Control Register 1	ICCR1	8	8	2, 3 PCLKB	2 ICLK		Not present in versions with 112, 100, 64, or 48 pins.
0008 8321h	RIIC1	I²C Bus Control Register 2	ICCR2	8	8	2, 3 PCLKB	2 ICLK		Not present in versions with 112, 100, 64, or 48 pins.
0008 8322h	RIIC1	I²C Bus Mode Register 1	ICMR1	8	8	2, 3 PCLKB	2 ICLK		Not present in versions with 112, 100, 64, or 48 pins.
0008 8323h	RIIC1	I²C Bus Mode Register 2	ICMR2	8	8	2, 3 PCLKB	2 ICLK		Not present in versions with 112, 100, 64, or 48 pins.
0008 8324h	RIIC1	I²C Bus Mode Register 3	ICMR3	8	8	2, 3 PCLKB	2 ICLK		Not present in versions with 112, 100, 64, or 48 pins.
0008 8325h	RIIC1	I²C Bus Function Enable Register	ICFER	8	8	2, 3 PCLKB	2 ICLK		Not present in versions with 112, 100, 64, or 48 pins.
0008 8326h	RIIC1	I²C Bus Status Enable Register	ICSER	8	8	2, 3 PCLKB	2 ICLK		Not present in versions with 112, 100, 64, or 48 pins.
0008 8327h	RIIC1	I²C Bus Interrupt Enable Register	ICIER	8	8	2, 3 PCLKB	2 ICLK		Not present in versions with 112, 100, 64, or 48 pins.
0008 8328h	RIIC1	I²C Bus Status Register 1	ICSR1	8	8	2, 3 PCLKB	2 ICLK		Not present in versions with 112, 100, 64, or 48 pins.
0008 8329h	RIIC1	I²C Bus Status Register 2	ICSR2	8	8	2, 3 PCLKB	2 ICLK		Not present in versions with 112, 100, 64, or 48 pins.
0008 832Ah	RIIC1	Slave Address Register L0	SARL0	8	8	2, 3 PCLKB	2 ICLK		Not present in versions with 112, 100, 64, or 48 pins.
0008 832Ah	RIIC1	Timeout Internal Counter L	TMOCNTL	8	8	2, 3 PCLKB	2 ICLK		Not present in versions with 112, 100, 64, or 48 pins.
0008 832Bh	RIIC1	Slave Address Register U0	SARU0	8	8	2, 3 PCLKB	2 ICLK		Not present in versions with 112, 100, 64, or 48 pins.
0008 832Bh	RIIC1	Timeout Internal Counter U	TMOCNTU	8	8*2	2, 3 PCLKB	2 ICLK		Not present in versions with 112, 100, 64, or 48 pins.
0008 832Ch	RIIC1	Slave Address Register L1	SARL1	8	8	2, 3 PCLKB	2 ICLK		Not present in versions with 112, 100, 64, or 48 pins.
0008 832Dh	RIIC1	Slave Address Register U1	SARU1	8	8	2, 3 PCLKB	2 ICLK		Not present in versions with 112, 100, 64, or 48 pins.
0008 832Eh	RIIC1	Slave Address Register L2	SARL2	8	8	2, 3 PCLKB	2 ICLK		Not present in versions with 112, 100, 64, or 48 pins.
0008 832Fh	RIIC1	Slave Address Register U2	SARU2	8	8	2, 3 PCLKB	2 ICLK		Not present in versions with 112, 100, 64, or 48 pins.

Downloaded from Arrow.com.

Table 4.1 List of I/O Registers (Address Order) (16/48)

Address	Module Symbol	Register Name	Register Symbol	Number of Bits	Access Size	Number of Access States		Module Name	Remarks
						ICLK ≥ PCLK	ICLK < PCLK		
0008 8330h	RIIC1	I²C Bus Bit Rate Low-Level Register	ICBRL	8	8	2, 3 PCLKB	2 ICLK	RIIC	Not present in versions with 112, 100, 64, or 48 pins.
0008 8331h	RIIC1	I²C Bus Bit Rate High-Level Register	ICBRH	8	8	2, 3 PCLKB	2 ICLK		Not present in versions with 112, 100, 64, or 48 pins.
0008 8332h	RIIC1	I²C Bus Transmit Data Register	ICDRT	8	8	2, 3 PCLKB	2 ICLK		Not present in versions with 112, 100, 64, or 48 pins.
0008 8333h	RIIC1	I²C Bus Receive Data Register	ICDRR	8	8	2, 3 PCLKB	2 ICLK		Not present in versions with 112, 100, 64, or 48 pins.
0008 8380h	RSPI0	RSPI Control Register	SPCR	8	8	2, 3 PCLKB	2 ICLK	RSPI	
0008 8381h	RSPI0	RSPI Slave Select Polarity Register	SSLP	8	8	2, 3 PCLKB	2 ICLK		
0008 8382h	RSPI0	RSPI Pin Control Register	SPPCR	8	8	2, 3 PCLKB	2 ICLK		
0008 8383h	RSPI0	RSPI Status Register	SPSR	8	8	2, 3 PCLKB	2 ICLK		
0008 8384h	RSPI0	RSPI Data Register	SPDR	32	16, 32	2, 3 PCLKB	2 ICLK		
0008 8388h	RSPI0	RSPI Sequence Control Register	SPSCR	8	8	2, 3 PCLKB	2 ICLK		
0008 8389h	RSPI0	RSPI Sequence Status Register	SPSSR	8	8	2, 3 PCLKB	2 ICLK		
0008 838Ah	RSPI0	RSPI Bit Rate Register	SPBR	8	8	2, 3 PCLKB	2 ICLK		
0008 838Bh	RSPI0	RSPI Data Control Register	SPDCR	8	8	2, 3 PCLKB	2 ICLK		
0008 838Ch	RSPI0	RSPI Clock Delay Register	SPCKD	8	8	2, 3 PCLKB	2 ICLK		
0008 838Dh	RSPI0	RSPI Slave Select Negation Delay Register	SSLND	8	8	2, 3 PCLKB	2 ICLK		
0008 838Eh	RSPI0	RSPI Next-Access Delay Register	SPND	8	8	2, 3 PCLKB	2 ICLK		
0008 838Fh	RSPI0	RSPI Control Register 2	SPCR2	8	8	2, 3 PCLKB	2 ICLK		
0008 8390h	RSPI0	RSPI Command Register 0	SPCMD0	16	16	2, 3 PCLKB	2 ICLK		
0008 8392h	RSPI0	RSPI Command Register 1	SPCMD1	16	16	2, 3 PCLKB	2 ICLK		
0008 8394h	RSPI0	RSPI Command Register 2	SPCMD2	16	16	2, 3 PCLKB	2 ICLK		
0008 8396h	RSPI0	RSPI Command Register 3	SPCMD3	16	16	2, 3 PCLKB	2 ICLK		
0008 8398h	RSPI0	RSPI Command Register 4	SPCMD4	16	16	2, 3 PCLKB	2 ICLK		
0008 839Ah	RSPI0	RSPI Command Register 5	SPCMD5	16	16	2, 3 PCLKB	2 ICLK		
0008 839Ch	RSPI0	RSPI Command Register 6	SPCMD6	16	16	2, 3 PCLKB	2 ICLK		
0008 839Eh	RSPI0	RSPI Command Register 7	SPCMD7	16	16	2, 3 PCLKB	2 ICLK		
0008 83A0h	RSPI1	RSPI Control Register	SPCR	8	8	2, 3 PCLKB	2 ICLK		Not present in versions with 64 or 48 pins.
0008 83A1h	RSPI1	RSPI Slave Select Polarity Register	SSLP	8	8	2, 3 PCLKB	2 ICLK		Not present in versions with 64 or 48 pins.
0008 83A2h	RSPI1	RSPI Pin Control Register	SPPCR	8	8	2, 3 PCLKB	2 ICLK		Not present in versions with 64 or 48 pins.
0008 83A3h	RSPI1	RSPI Status Register	SPSR	8	8	2, 3 PCLKB	2 ICLK		Not present in versions with 64 or 48 pins.
0008 83A4h	RSPI1	RSPI Data Register	SPDR	32	16, 32	2, 3 PCLKB	2 ICLK		Not present in versions with 64 or 48 pins.
0008 83A8h	RSPI1	RSPI Sequence Control Register	SPSCR	8	8	2, 3 PCLKB	2 ICLK		Not present in versions with 64 or 48 pins.
0008 83A9h	RSPI1	RSPI Sequence Status Register	SPSSR	8	8	2, 3 PCLKB	2 ICLK		Not present in versions with 64 or 48 pins.
0008 83AAh	RSPI1	RSPI Bit Rate Register	SPBR	8	8	2, 3 PCLKB	2 ICLK		Not present in versions with 64 or 48 pins.
0008 83ABh	RSPI1	RSPI Data Control Register	SPDCR	8	8	2, 3 PCLKB	2 ICLK		Not present in versions with 64 or 48 pins.
0008 83ACh	RSPI1	RSPI Clock Delay Register	SPCKD	8	8	2, 3 PCLKB	2 ICLK		Not present in versions with 64 or 48 pins.
0008 83ADh	RSPI1	RSPI Slave Select Negation Delay Register	SSLND	8	8	2, 3 PCLKB	2 ICLK		Not present in versions with 64 or 48 pins.
0008 83AEh	RSPI1	RSPI Next-Access Delay Register	SPND	8	8	2, 3 PCLKB	2 ICLK		Not present in versions with 64 or 48 pins.
0008 83AFh	RSPI1	RSPI Control Register 2	SPCR2	8	8	2, 3 PCLKB	2 ICLK		Not present in versions with 64 or 48 pins.
0008 83B0h	RSPI1	RSPI Command Register 0	SPCMD0	16	16	2, 3 PCLKB	2 ICLK		Not present in versions with 64 or 48 pins.

Downloaded from Arrow.com.

Table 4.1 List of I/O Registers (Address Order) (17/48)

Address	Module Symbol	Register Name	Register Symbol	Number of Bits	Access Size	Number of Access States		Module Name	Remarks
						ICLK ≥ PCLK	ICLK < PCLK		
0008 83B2h	RSPI1	RSPI Command Register 1	SPCMD1	16	16	2, 3 PCLKB	2 ICLK	RSPI	Not present in versions with 64 or 48 pins.
0008 83B4h	RSPI1	RSPI Command Register 2	SPCMD2	16	16	2, 3 PCLKB	2 ICLK		Not present in versions with 64 or 48 pins.
0008 83B6h	RSPI1	RSPI Command Register 3	SPCMD3	16	16	2, 3 PCLKB	2 ICLK		Not present in versions with 64 or 48 pins.
0008 83B8h	RSPI1	RSPI Command Register 4	SPCMD4	16	16	2, 3 PCLKB	2 ICLK		Not present in versions with 64 or 48 pins.
0008 83BAh	RSPI1	RSPI Command Register 5	SPCMD5	16	16	2, 3 PCLKB	2 ICLK		Not present in versions with 64 or 48 pins.
0008 83BCh	RSPI1	RSPI Command Register 6	SPCMD6	16	16	2, 3 PCLKB	2 ICLK		Not present in versions with 64 or 48 pins.
0008 83BEh	RSPI1	RSPI Command Register 7	SPCMD7	16	16	2, 3 PCLKB	2 ICLK		Not present in versions with 64 or 48 pins.
0008 9000h	S12AD	A/D Control Register	ADCSR	16	16	2, 3 PCLKB	2 ICLK	S12ADB	
0008 9004h	S12AD	A/D Channel Select Register A	ADANSA	16	16	2, 3 PCLKB	2 ICLK		
0008 9008h	S12AD	A/D-Converted Value Addition Mode Select Register	ADADS	16	16	2, 3 PCLKB	2 ICLK		
0008 900Ch	S12AD	A/D-Converted Value Addition Count Select Register	ADADC	8	8	2, 3 PCLKB	2 ICLK		
0008 900Eh	S12AD	A/D Control Extended Register	ADCER	16	16	2, 3 PCLKB	2 ICLK		
0008 9010h	S12AD	A/D Start Trigger Select Register	ADSTRGR	16	16	2, 3 PCLKB	2 ICLK		
0008 9014h	S12AD	A/D Channel Select Register B	ADANSB	16	16	2, 3 PCLKB	2 ICLK		
0008 9018h	S12AD	A/D Data-Doubling Register	ADDBLDR	16	16	2, 3 PCLKB	2 ICLK		
0008 901Eh	S12AD	A/D Self-Diagnosis Data Register	ADRD	16	16	2, 3 PCLKB	2 ICLK		
0008 9020h	S12AD	A/D Data Register 0	ADDR0	16	16	2, 3 PCLKB	2 ICLK		
0008 9022h	S12AD	A/D Data Register 1	ADDR1	16	16	2, 3 PCLKB	2 ICLK		
0008 9024h	S12AD	A/D Data Register 2	ADDR2	16	16	2, 3 PCLKB	2 ICLK		
0008 9026h	S12AD	A/D Data Register 3	ADDR3	16	16	2, 3 PCLKB	2 ICLK		
0008 9028h	S12AD	A/D Data Register 4	ADDR4	16	16	2, 3 PCLKB	2 ICLK		Not present in versions with 144, 120, 112, or 100 pins.
0008 902Ah	S12AD	A/D Data Register 5	ADDR5	16	16	2, 3 PCLKB	2 ICLK		Not present in versions with 144, 120, 112, or 100 pins.
0008 902Ch	S12AD	A/D Data Register 6	ADDR6	16	16	2, 3 PCLKB	2 ICLK		Not present in versions with 144, 120, 112, or 100 pins.
0008 902Eh	S12AD	A/D Data Register 7	ADDR7	16	16	2, 3 PCLKB	2 ICLK		Not present in versions with 144, 120, 112, or 100 pins.
0008 9060h	S12AD	A/D Sampling State Register 0	ADSSTR0	8	8	2, 3 PCLKB	2 ICLK		
0008 9066h	S12AD	A/D Sample and Hold Circuit Control Register	ADSHCR	16	16	2, 3 PCLKB	2 ICLK		
0008 9073h	S12AD	A/D Sampling State Register 1	ADSSTR1	8	8	2, 3 PCLKB	2 ICLK		
0008 9074h	S12AD	A/D Sampling State Register 2	ADSSTR2	8	8	2, 3 PCLKB	2 ICLK		
0008 9075h	S12AD	A/D Sampling State Register 3	ADSSTR3	8	8	2, 3 PCLKB	2 ICLK		
0008 9076h	S12AD	A/D Sampling State Register 4	ADSSTR4	8	8	2, 3 PCLKB	2 ICLK		Not present in versions with 144, 120, 112, or 100 pins.
0008 9077h	S12AD	A/D Sampling State Register 5	ADSSTR5	8	8	2, 3 PCLKB	2 ICLK		Not present in versions with 144, 120, 112, or 100 pins.
0008 9078h	S12AD	A/D Sampling State Register 6	ADSSTR6	8	8	2, 3 PCLKB	2 ICLK		Not present in versions with 144, 120, 112, or 100 pins.
0008 9079h	S12AD	A/D Sampling State Register 7	ADSSTR7	8	8	2, 3 PCLKB	2 ICLK		Not present in versions with 144, 120, 112, or 100 pins.
0008 9080h	S12AD	A/D Group Scan Priority Control Register	ADGSPCR	16	16	2, 3 PCLKB	2 ICLK		
0008 9084h	S12AD	A/D Data-Doubling Register A	ADDBLDRA	16	16	2, 3 PCLKB	2 ICLK		
0008 9086h	S12AD	A/D Data-Doubling Register B	ADDBLDRB	16	16	2, 3 PCLKB	2 ICLK		
0008 908Ah	S12AD	A/D Programmable Gain Amplifier Register	ADPG	16	16	2, 3 PCLKB	2 ICLK		Not present in versions with 64 or 48 pins.

Downloaded from Arrow.com.

Table 4.1 List of I/O Registers (Address Order) (18/48)

Address	Module Symbol	Register Name	Register Symbol	Number of Bits	Access Size	Number of Access States		Module Name	Remarks
						ICLK ≥ PCLK	ICLK < PCLK		
0008 90E0h	S12AD	Comparator Operating Mode Selection Register 0	ADCMPMD0	16	16	2, 3 PCLKB	2 ICLK	S12ADB	
0008 90E2h	S12AD	Comparator Operating-Mode Selection Register 1	ADCMPMD1	16	16	2, 3 PCLKB	2 ICLK		
0008 90E4h	S12AD	Comparator Filter-Mode Register	ADCMPNR0	16	16	2, 3 PCLKB	2 ICLK		
0008 90E8h	S12AD	Comparator Detection Flag Register	ADCMPFR	8	8	2, 3 PCLKB	2 ICLK		
0008 90EAh	S12AD	Comparator Interrupt Selection Register	ADCMPSEL	16	16	2, 3 PCLKB	2 ICLK		
0008 90FCh	S12AD	A/D Group Scan Priority Control Register	ADGSPMR	16	16	2, 3 PCLKB	2 ICLK		Not present in versions with 64 or 48 pins.
0008 9100h	S12AD1	A/D Control Register	ADCSR	16	16	2, 3 PCLKB	2 ICLK		Not present in versions with 64 or 48 pins.
0008 9104h	S12AD1	A/D Channel Select Register A	ADANSA	16	16	2, 3 PCLKB	2 ICLK		Not present in versions with 64 or 48 pins.
0008 9108h	S12AD1	A/D-Converted Value Addition Mode Select Register (ADADS)	ADADS	16	16	2, 3 PCLKB	2 ICLK		Not present in versions with 64 or 48 pins.
0008 910Ch	S12AD1	A/D-Converted Value Addition Count Select Register	ADADC	8	8	2, 3 PCLKB	2 ICLK		Not present in versions with 64 or 48 pins.
0008 910Eh	S12AD1	A/D Control Extended Register	ADCER	16	16	2, 3 PCLKB	2 ICLK		Not present in versions with 64 or 48 pins.
0008 9110h	S12AD1	A/D Start Trigger Select Register	ADSTRGR	16	16	2, 3 PCLKB	2 ICLK		Not present in versions with 64 or 48 pins.
0008 9114h	S12AD1	A/D Channel Select Register B	ADANSB	16	16	2, 3 PCLKB	2 ICLK		Not present in versions with 64 or 48 pins.
0008 9118h	S12AD1	A/D Data-Doubling Register	ADDBLDR	16	16	2, 3 PCLKB	2 ICLK		Not present in versions with 64 or 48 pins.
0008 911Eh	S12AD1	A/D Self-Diagnosis Data Register	ADRD	16	16	2, 3 PCLKB	2 ICLK		Not present in versions with 64 or 48 pins.
0008 9120h	S12AD1	A/D Data Register 0	ADDR0	16	16	2, 3 PCLKB	2 ICLK		Not present in versions with 64 or 48 pins.
0008 9122h	S12AD1	A/D Data Register 1	ADDR1	16	16	2, 3 PCLKB	2 ICLK		Not present in versions with 64 or 48 pins.
0008 9124h	S12AD1	A/D Data Register 2	ADDR2	16	16	2, 3 PCLKB	2 ICLK		Not present in versions with 64 or 48 pins.
0008 9126h	S12AD1	A/D Data Register 3	ADDR3	16	16	2, 3 PCLKB	2 ICLK		Not present in versions with 64 or 48 pins.
0008 9160h	S12AD1	A/D Sampling State Register 0	ADSSTR0	8	8	2, 3 PCLKB	2 ICLK		Not present in versions with 64 or 48 pins.
0008 9166h	S12AD1	A/D Sample and Hold Circuit Control Register	ADSHCR	16	16	2, 3 PCLKB	2 ICLK		Not present in versions with 64 or 48 pins.
0008 9173h	S12AD1	A/D Sampling State Register 1	ADSSTR1	8	8	2, 3 PCLKB	2 ICLK		Not present in versions with 64 or 48 pins.
0008 9174h	S12AD1	A/D Sampling State Register 2	ADSSTR2	8	8	2, 3 PCLKB	2 ICLK		Not present in versions with 64 or 48 pins.
0008 9175h	S12AD1	A/D Sampling State Register 3	ADSSTR3	8	8	2, 3 PCLKB	2 ICLK		Not present in versions with 64 or 48 pins.
0008 9180h	S12AD1	A/D Group Scan Priority Control Register	ADGSPCR	16	16	2, 3 PCLKB	2 ICLK		Not present in versions with 64 or 48 pins.
0008 9184h	S12AD1	A/D Data-Doubling Register A	ADDBLDRA	16	16	2, 3 PCLKB	2 ICLK		Not present in versions with 64 or 48 pins.
0008 9186h	S12AD1	A/D Data-Doubling Register B	ADDBLDRB	16	16	2, 3 PCLKB	2 ICLK		Not present in versions with 64 or 48 pins.
0008 918Ah	S12AD1	A/D Programmable Gain Amplifier Register	ADPG	16	16	2, 3 PCLKB	2 ICLK		Not present in versions with 64 or 48 pins.
0008 91E0h	S12AD1	Comparator Operating Mode Selection Register 0	ADCMPMD0	16	16	2, 3 PCLKB	2 ICLK		Not present in versions with 64 or 48 pins.
0008 91E2h	S12AD1	Comparator Operating-Mode Selection Register 1	ADCMPMD1	16	16	2, 3 PCLKB	2 ICLK		Not present in versions with 64 or 48 pins.
0008 91E4h	S12AD1	Comparator Filter-Mode Register	ADCMPNR0	16	16	2, 3 PCLKB	2 ICLK		Not present in versions with 64 or 48 pins.
0008 91E8h	S12AD1	Comparator Detection Flag Register	ADCMPFR	8	8	2, 3 PCLKB	2 ICLK		Not present in versions with 64 or 48 pins.
0008 91EAh	S12AD1	Comparator Interrupt Selection Register	ADCMPSEL	16	16	2, 3 PCLKB	2 ICLK		Not present in versions with 64 or 48 pins.
0008 9800h	AD	A/D Control Register	ADCSR	16	16	2, 3 PCLKB	2 ICLK		Not present in versions with 64 or 48 pins.

Downloaded from Arrow.com.

Table 4.1 List of I/O Registers (Address Order) (19/48)

Address	Module Symbol	Register Name	Register Symbol	Number of Bits	Access Size	Number of Access States		Module Name	Remarks
						ICLK ≥ PCLK	ICLK < PCLK		
0008 9804h	AD	A/D Channel Select Register 0	ADANSA0	16	16	2, 3 PCLKB	2 ICLK	AD	Not present in versions with 64 or 48 pins.
0008 9806h	AD	A/D Channel Select Register 1	ADANSA1	16	16	2, 3 PCLKB	2 ICLK		Not present in versions with 120, 112, 100, 64 or 48 pins.
0008 9808h	AD	A/D-Converted Value Addition Mode Select Register0	ADADS0	16	16	2, 3 PCLKB	2 ICLK		Not present in versions with 64 or 48 pins.
0008 980Ah	AD	A/D-Converted Value Addition Mode Select Register1	ADADS1	16	16	2, 3 PCLKB	2 ICLK		Not present in versions with 120, 112, 100, 64 or 48 pins.
0008 980Ch	AD	A/D-Converted Value Addition Count Select Register	ADADC	8	8	2, 3 PCLKB	2 ICLK		Not present in versions with 64 or 48 pins.
0008 980Eh	AD	A/D Control Extended Register	ADCER	16	16	2, 3 PCLKB	2 ICLK		Not present in versions with 64 or 48 pins.
0008 9810h	AD	A/D Start Trigger Select Register	ADSTRGR	16	16	2, 3 PCLKB	2 ICLK		Not present in versions with 64 or 48 pins.
0008 981Eh	AD	A/D Self-Diagnosis Data Register	ADRD	16	16	2, 3 PCLKB	2 ICLK		Not present in versions with 64 or 48 pins.
0008 9820h	AD	A/D Data Register A	ADDRA	16	16	2, 3 PCLKB	2 ICLK		Not present in versions with 64 or 48 pins.
0008 9822h	AD	A/D Data Register B	ADDRB	16	16	2, 3 PCLKB	2 ICLK		Not present in versions with 64 or 48 pins.
0008 9824h	AD	A/D Data Register C	ADDRC	16	16	2, 3 PCLKB	2 ICLK		Not present in versions with 64 or 48 pins.
0008 9826h	AD	A/D Data Register D	ADDRD	16	16	2, 3 PCLKB	2 ICLK		Not present in versions with 64 or 48 pins.
0008 9828h	AD	A/D Data Register E	ADDRE	16	16	2, 3 PCLKB	2 ICLK		Not present in versions with 64 or 48 pins.
0008 982Ah	AD	A/D Data Register F	ADDRF	16	16	2, 3 PCLKB	2 ICLK		Not present in versions with 64 or 48 pins.
0008 982Ch	AD	A/D Data Register G	ADDRG	16	16	2, 3 PCLKB	2 ICLK		Not present in versions with 64 or 48 pins.
0008 982Eh	AD	A/D Data Register H	ADDRH	16	16	2, 3 PCLKB	2 ICLK		Not present in versions with 64 or 48 pins.
0008 9830h	AD	A/D Data Register I	ADDRI	16	16	2, 3 PCLKB	2 ICLK		Not present in versions with 64 or 48 pins.
0008 9832h	AD	A/D Data Register J	ADDRJ	16	16	2, 3 PCLKB	2 ICLK		Not present in versions with 64 or 48 pins.
0008 9834h	AD	A/D Data Register K	ADDRK	16	16	2, 3 PCLKB	2 ICLK		Not present in versions with 64 or 48 pins.
0008 9836h	AD	A/D Data Register L	ADDRL	16	16	2, 3 PCLKB	2 ICLK		Not present in versions with 64 or 48 pins.
0008 9838h	AD	A/D Data Register M	ADDRM	16	16	2, 3 PCLKB	2 ICLK		Not present in versions with 120, 112, 100, 64, or 48 pins.
0008 983Ah	AD	A/D Data Register N	ADDRN	16	16	2, 3 PCLKB	2 ICLK		Not present in versions with 120, 112, 100, 64, or 48 pins.
0008 983Ch	AD	A/D Data Register O	ADDRO	16	16	2, 3 PCLKB	2 ICLK		Not present in versions with 120, 112, 100, 64, or 48 pins.
0008 983Eh	AD	A/D Data Register P	ADDRP	16	16	2, 3 PCLKB	2 ICLK		Not present in versions with 120, 112, 100, 64, or 48 pins.
0008 9840h	AD	A/D Data Register Q	ADDRQ	16	16	2, 3 PCLKB	2 ICLK		Not present in versions with 120, 112, 100, 64, or 48 pins.
0008 9842h	AD	A/D Data Register R	ADDRR	16	16	2, 3 PCLKB	2 ICLK		Not present in versions with 120, 112, 100, 64, or 48 pins.
0008 9844h	AD	A/D Data Register S	ADDRS	16	16	2, 3 PCLKB	2 ICLK		Not present in versions with 120, 112, 100, 64, or 48 pins.
0008 9846h	AD	A/D Data Register T	ADDRT	16	16	2, 3 PCLKB	2 ICLK		Not present in versions with 120, 112, 100, 64, or 48 pins.
0008 9860h	AD	A/D Sampling State Register 0	ADSSTR0	8	8	2, 3 PCLKB	2 ICLK		Not present in versions with 64 or 48 pins.
0008 9861h	AD	A/D Sampling State Register L	ADSSTRL	8	8	2, 3 PCLKB	2 ICLK		Not present in versions with 64 or 48 pins.

Downloaded from Arrow.com.

Table 4.1 List of I/O Registers (Address Order) (20/48)

Address	Module Symbol	Register Name	Register Symbol	Number of Bits	Access Size	Number of Access States		Module Name	Remarks
						ICLK ≥ PCLK	ICLK < PCLK		
0008 9873h	AD	A/D Sampling State Register 1	ADSSTR1	8	8	2, 3 PCLKB	2 ICLK	AD	Not present in versions with 64 or 48 pins.
0008 9874h	AD	A/D Sampling State Register 2	ADSSTR2	8	8	2, 3 PCLKB	2 ICLK		Not present in versions with 64 or 48 pins.
0008 9875h	AD	A/D Sampling State Register 3	ADSSTR3	8	8	2, 3 PCLKB	2 ICLK		Not present in versions with 64 or 48 pins.
0008 9876h	AD	A/D Sampling State Register 4	ADSSTR4	8	8	2, 3 PCLKB	2 ICLK		Not present in versions with 64 or 48 pins.
0008 9877h	AD	A/D Sampling State Register 5	ADSSTR5	8	8	2, 3 PCLKB	2 ICLK		Not present in versions with 64 or 48 pins.
0008 9878h	AD	A/D Sampling State Register 6	ADSSTR6	8	8	2, 3 PCLKB	2 ICLK		Not present in versions with 64 or 48 pins.
0008 9879h	AD	A/D Sampling State Register 7	ADSSTR7	8	8	2, 3 PCLKB	2 ICLK		Not present in versions with 64 or 48 pins.
0008 987Dh	AD	Digital Power Supply Control Circuit Output Register	ADDPCONR	8	8	2, 3 PCLKB	2 ICLK		Not present in versions with 64, or 48 pins.
0008 A000h	SCI0	Serial Mode Register	SMR	8	8	2, 3 PCLKB	2 ICLK	SCIc, SCId	
0008 A001h	SCI0	Bit Rate Register	BRR	8	8	2, 3 PCLKB	2 ICLK		
0008 A002h	SCI0	Serial Control Register	SCR	8	8	2, 3 PCLKB	2 ICLK		
0008 A003h	SCI0	Transmit Data Register	TDR	8	8	2, 3 PCLKB	2 ICLK		
0008 A004h	SCI0	Serial Status Register	SSR	8	8	2, 3 PCLKB	2 ICLK		
0008 A005h	SCI0	Receive Data Register	RDR	8	8	2, 3 PCLKB	2 ICLK		
0008 A006h	SCI0	Smart Card Mode Register	SCMR	8	8	2, 3 PCLKB	2 ICLK		
0008 A007h	SCI0	Serial Extended Mode Register	SEMR	8	8	2, 3 PCLKB	2 ICLK		
0008 A008h	SCI0	Noise Filter Setting Register	SNFR	8	8	2, 3 PCLKB	2 ICLK		
0008 A009h	SCI0	I^2C Mode Register 1	SIMR1	8	8	2, 3 PCLKB	2 ICLK		
0008 A00Ah	SCI0	I^2C Mode Register 2	SIMR2	8	8	2, 3 PCLKB	2 ICLK		
0008 A00Bh	SCI0	I^2C Mode Register 3	SIMR3	8	8	2, 3 PCLKB	2 ICLK		
0008 A00Ch	SCI0	I^2C Status Register	SISR	8	8	2, 3 PCLKB	2 ICLK		
0008 A00Dh	SCI0	SPI Mode Register	SPMR	8	8	2, 3 PCLKB	2 ICLK		
0008 A020h	SCI1	Serial Mode Register	SMR	8	8	2, 3 PCLKB	2 ICLK		
0008 A021h	SCI1	Bit Rate Register	BRR	8	8	2, 3 PCLKB	2 ICLK		
0008 A022h	SCI1	Serial Control Register	SCR	8	8	2, 3 PCLKB	2 ICLK		
0008 A023h	SCI1	Transmit Data Register	TDR	8	8	2, 3 PCLKB	2 ICLK		
0008 A024h	SCI1	Serial Status Register	SSR	8	8	2, 3 PCLKB	2 ICLK		
0008 A025h	SCI1	Receive Data Register	RDR	8	8	2, 3 PCLKB	2 ICLK		
0008 A026h	SCI1	Smart Card Mode Register	SCMR	8	8	2, 3 PCLKB	2 ICLK		
0008 A027h	SCI1	Serial Extended Mode Register	SEMR	8	8	2, 3 PCLKB	2 ICLK		
0008 A028h	SCI1	Noise Filter Setting Register	SNFR	8	8	2, 3 PCLKB	2 ICLK		
0008 A029h	SCI1	I^2C Mode Register 1	SIMR1	8	8	2, 3 PCLKB	2 ICLK		
0008 A02Ah	SCI1	I^2C Mode Register 2	SIMR2	8	8	2, 3 PCLKB	2 ICLK		
0008 A02Bh	SCI1	I^2C Mode Register 3	SIMR3	8	8	2, 3 PCLKB	2 ICLK		
0008 A02Ch	SCI1	I^2C Status Register	SISR	8	8	2, 3 PCLKB	2 ICLK		
0008 A02Dh	SCI1	SPI Mode Register	SPMR	8	8	2, 3 PCLKB	2 ICLK		
0008 A040h	SCI2	Serial Mode Register	SMR	8	8	2, 3 PCLKB	2 ICLK		Not present in versions with 64 or 48 pins.
0008 A041h	SCI2	Bit Rate Register	BRR	8	8	2, 3 PCLKB	2 ICLK		Not present in versions with 64 or 48 pins.
0008 A042h	SCI2	Serial Control Register	SCR	8	8	2, 3 PCLKB	2 ICLK		Not present in versions with 64 or 48 pins.
0008 A043h	SCI2	Transmit Data Register	TDR	8	8	2, 3 PCLKB	2 ICLK		Not present in versions with 64 or 48 pins.
0008 A044h	SCI2	Serial Status Register	SSR	8	8	2, 3 PCLKB	2 ICLK		Not present in versions with 64 or 48 pins.
0008 A045h	SCI2	Receive Data Register	RDR	8	8	2, 3 PCLKB	2 ICLK		Not present in versions with 64 or 48 pins.
0008 A046h	SCI2	Smart Card Mode Register	SCMR	8	8	2, 3 PCLKB	2 ICLK		Not present in versions with 64 or 48 pins.

Downloaded from Arrow.com.

Table 4.1 List of I/O Registers (Address Order) (21/48)

Address	Module Symbol	Register Name	Register Symbol	Number of Bits	Access Size	Number of Access States		Module Name	Remarks
						ICLK ≥ PCLK	ICLK < PCLK		
0008 A047h	SCI2	Serial Extended Mode Register	SEMR	8	8	2, 3 PCLKB	2 ICLK	SCIc, SCId	Not present in versions with 64 or 48 pins.
0008 A048h	SCI2	Noise Filter Setting Register	SNFR	8	8	2, 3 PCLKB	2 ICLK		Not present in versions with 64 or 48 pins.
0008 A049h	SCI2	I^2C Mode Register 1	SIMR1	8	8	2, 3 PCLKB	2 ICLK		Not present in versions with 64 or 48 pins.
0008 A04Ah	SCI2	I^2C Mode Register 2	SIMR2	8	8	2, 3 PCLKB	2 ICLK		Not present in versions with 64 or 48 pins.
0008 A04Bh	SCI2	I^2C Mode Register 3	SIMR3	8	8	2, 3 PCLKB	2 ICLK		Not present in versions with 64 or 48 pins.
0008 A04Ch	SCI2	I^2C Status Register	SISR	8	8	2, 3 PCLKB	2 ICLK		Not present in versions with 64 or 48 pins.
0008 A04Dh	SCI2	SPI Mode Register	SPMR	8	8	2, 3 PCLKB	2 ICLK		Not present in versions with 64 or 48 pins.
0008 A060h	SCI3	Serial Mode Register	SMR	8	8	2, 3 PCLKB	2 ICLK		Not present in versions with 100, 64, or 48 pins.
0008 A061h	SCI3	Bit Rate Register	BRR	8	8	2, 3 PCLKB	2 ICLK		Not present in versions with 100, 64, or 48 pins.
0008 A062h	SCI3	Serial Control Register	SCR	8	8	2, 3 PCLKB	2 ICLK		Not present in versions with 100, 64, or 48 pins.
0008 A063h	SCI3	Transmit Data Register	TDR	8	8	2, 3 PCLKB	2 ICLK		Not present in versions with 100, 64, or 48 pins.
0008 A064h	SCI3	Serial Status Register	SSR	8	8	2, 3 PCLKB	2 ICLK		Not present in versions with 100, 64, or 48 pins.
0008 A065h	SCI3	Receive Data Register	RDR	8	8	2, 3 PCLKB	2 ICLK		Not present in versions with 100, 64, or 48 pins.
0008 A066h	SCI3	Smart Card Mode Register	SCMR	8	8	2, 3 PCLKB	2 ICLK		Not present in versions with 100, 64, or 48 pins.
0008 A067h	SCI3	Serial Extended Mode Register	SEMR	8	8	2, 3 PCLKB	2 ICLK		Not present in versions with 100, 64, or 48 pins.
0008 A068h	SCI3	Noise Filter Setting Register	SNFR	8	8	2, 3 PCLKB	2 ICLK		Not present in versions with 100, 64, or 48 pins.
0008 A069h	SCI3	I^2C Mode Register 1	SIMR1	8	8	2, 3 PCLKB	2 ICLK		Not present in versions with 100, 64, or 48 pins.
0008 A06Ah	SCI3	I^2C Mode Register 2	SIMR2	8	8	2, 3 PCLKB	2 ICLK		Not present in versions with 100, 64, or 48 pins.
0008 A06Bh	SCI3	I^2C Mode Register 3	SIMR3	8	8	2, 3 PCLKB	2 ICLK		Not present in versions with 100, 64, or 48 pins.
0008 A06Ch	SCI3	I^2C Status Register	SISR	8	8	2, 3 PCLKB	2 ICLK		Not present in versions with 100, 64, or 48 pins.
0008 A06Dh	SCI3	SPI Mode Register	SPMR	8	8	2, 3 PCLKB	2 ICLK		Not present in versions with 100, 64, or 48 pins.
0008 B000h	CAC	CAC Control Register 0	CACR0	8	8	2, 3 PCLKB	2 ICLK	CAC	
0008 B001h	CAC	CAC Control Register 1	CACR1	8	8	2, 3 PCLKB	2 ICLK		
0008 B002h	CAC	CAC Control Register 2)	CACR2	8	8	2, 3 PCLKB	2 ICLK		
0008 B003h	CAC	CAC Interrupt Control Register	CAICR	8	8	2, 3 PCLKB	2 ICLK		
0008 B004h	CAC	CAC Status Register	CASTR	8	8	2, 3 PCLKB	2 ICLK		
0008 B006h	CAC	CAC Upper-Limit Value Setting Register	CAULVR	16	16	2, 3 PCLKB	2 ICLK		
0008 B008h	CAC	CAC Lower-Limit Value Setting Register	CALLVR	16	16	2, 3 PCLKB	2 ICLK		
0008 B00Ah	CAC	CAC Counter Buffer Register	CACNTBR	16	16	2, 3 PCLKB	2 ICLK		
0008 B080h	DOC	DOC Control Register	DOCR	8	8	2, 3 PCLKB	2 ICLK	DOC	
0008 B082h	DOC	DOC Data Input Register	DODIR	16	16	2, 3 PCLKB	2 ICLK		
0008 B084h	DOC	DOC Data Setting Register	DODSR	16	16	2, 3 PCLKB	2 ICLK		
0008 B300h	SCI12	Serial Mode Register	SMR	8	8	2, 3 PCLKB	2 ICLK	SCIc, SCId	
0008 B301h	SCI12	Bit Rate Register	BRR	8	8	2, 3 PCLKB	2 ICLK		
0008 B302h	SCI12	Serial Control Register	SCR	8	8	2, 3 PCLKB	2 ICLK		
0008 B303h	SCI12	Transmit Data Register	TDR	8	8	2, 3 PCLKB	2 ICLK		
0008 B304h	SCI12	Serial Status Register	SSR	8	8	2, 3 PCLKB	2 ICLK		
0008 B305h	SCI12	Receive Data Register	RDR	8	8	2, 3 PCLKB	2 ICLK		
0008 B306h	SCI12	Smart Card Mode Register	SCMR	8	8	2, 3 PCLKB	2 ICLK		
0008 B307h	SCI12	Serial Extended Mode Register	SEMR	8	8	2, 3 PCLKB	2 ICLK		

Downloaded from Arrow.com.

Table 4.1 List of I/O Registers (Address Order) (22/48)

Address	Module Symbol	Register Name	Register Symbol	Number of Bits	Access Size	Number of Access States		Module Name	Remarks
						ICLK ≥ PCLK	ICLK < PCLK		
0008 B308h	SCI12	Noise Filter Setting Register	SNFR	8	8	2, 3 PCLKB	2 ICLK	SCIc, SCId	
0008 B309h	SCI12	I²C Mode Register 1	SIMR1	8	8	2, 3 PCLKB	2 ICLK		
0008 B30Ah	SCI12	I²C Mode Register 2	SIMR2	8	8	2, 3 PCLKB	2 ICLK		
0008 B30Bh	SCI12	I²C Mode Register 3	SIMR3	8	8	2, 3 PCLKB	2 ICLK		
0008 B30Ch	SCI12	I²C Status Register	SISR	8	8	2, 3 PCLKB	2 ICLK		
0008 B30Dh	SCI12	SPI Mode Register	SPMR	8	8	2, 3 PCLKB	2 ICLK		
0008 B320h	SCI12	Extended Serial Module Enable Register	ESMER	8	8	2, 3 PCLKB	2 ICLK		
0008 B321h	SCI12	Control Register 0	CR0	8	8	2, 3 PCLKB	2 ICLK		
0008 B322h	SCI12	Control Register 1	CR1	8	8	2, 3 PCLKB	2 ICLK		
0008 B323h	SCI12	Control Register 2	CR2	8	8	2, 3 PCLKB	2 ICLK		
0008 B324h	SCI12	Control Register 3	CR3	8	8	2, 3 PCLKB	2 ICLK		
0008 B325h	SCI12	Port Control Register	PCR	8	8	2, 3 PCLKB	2 ICLK		
0008 B326h	SCI12	Interrupt Control Register	ICR	8	8	2, 3 PCLKB	2 ICLK		
0008 B327h	SCI12	Status Register	STR	8	8	2, 3 PCLKB	2 ICLK		
0008 B328h	SCI12	Status Clear Register	STCR	8	8	2, 3 PCLKB	2 ICLK		
0008 B329h	SCI12	Control Field 0 Data Register	CF0DR	8	8	2, 3 PCLKB	2 ICLK		
0008 B32Ah	SCI12	Control Field 0 Compare Enable Register	CF0CR	8	8	2, 3 PCLKB	2 ICLK		
0008 B32Bh	SCI12	Control Field 0 Receive Data Register	CF0RR	8	8	2, 3 PCLKB	2 ICLK		
0008 B32Ch	SCI12	Primary Control Field 1 Data Register	PCF1DR	8	8	2, 3 PCLKB	2 ICLK		
0008 B32Dh	SCI12	Primary Control Field 1 Data Register	SCF1DR	8	8	2, 3 PCLKB	2 ICLK		
0008 B32Eh	SCI12	Secondary Control Field 1 Data Register	CF1CR	8	8	2, 3 PCLKB	2 ICLK		
0008 B32Fh	SCI12	Control Field 1 Receive Data Register	CF1RR	8	8	2, 3 PCLKB	2 ICLK		
0008 B330h	SCI12	Timer Control Register	TCR	8	8	2, 3 PCLKB	2 ICLK		
0008 B331h	SCI12	Timer Mode Register	TMR	8	8	2, 3 PCLKB	2 ICLK		
0008 B332h	SCI12	Timer Prescaler Register	TPRE	8	8	2, 3 PCLKB	2 ICLK		
0008 B333h	SCI12	Timer Count Register	TCNT	8	8	2, 3 PCLKB	2 ICLK		
0008 C000h	PORT0	Port Direction Register	PDR	8	8	2, 3 PCLKB	2 ICLK	I/O Ports	Not present in versions with 48 pins.
0008 C001h	PORT1	Port Direction Register	PDR	8	8	2, 3 PCLKB	2 ICLK		Not present in versions with 48 pins.
0008 C002h	PORT2	Port Direction Register	PDR	8	8	2, 3 PCLKB	2 ICLK		
0008 C003h	PORT3	Port Direction Register	PDR	8	8	2, 3 PCLKB	2 ICLK		
0008 C007h	PORT7	Port Direction Register	PDR	8	8	2, 3 PCLKB	2 ICLK		
0008 C008h	PORT8	Port Direction Register	PDR	8	8	2, 3 PCLKB	2 ICLK		Not present in versions with 64 or 48 pins.
0008 C009h	PORT9	Port Direction Register	PDR	8	8	2, 3 PCLKB	2 ICLK		Not present in versions with 48 pins.
0008 C00Ah	PORTA	Port Direction Register	PDR	8	8	2, 3 PCLKB	2 ICLK		
0008 C00Bh	PORTB	Port Direction Register	PDR	8	8	2, 3 PCLKB	2 ICLK		
0008 C00Dh	PORTD	Port Direction Register	PDR	8	8	2, 3 PCLKB	2 ICLK		
0008 C00Eh	PORTE	Port Direction Register	PDR	8	8	2, 3 PCLKB	2 ICLK		Not present in versions with 64 or 48 pins.
0008 C00Fh	PORTF	Port Direction Register	PDR	8	8	2, 3 PCLKB	2 ICLK		Not present in versions with 100, 64, or 48 pins.
0008 C010h	PORTG	Port Direction Register	PDR	8	8	2, 3 PCLKB	2 ICLK		Not present in versions with 100, 64, or 48 pins.
0008 C020h	PORT0	Port Output Data Register	PODR	8	8	2, 3 PCLKB	2 ICLK		Not present in versions with 48 pins.
0008 C021h	PORT1	Port Output Data Register	PODR	8	8	2, 3 PCLKB	2 ICLK		Not present in versions with 48 pins.
0008 C022h	PORT2	Port Output Data Register	PODR	8	8	2, 3 PCLKB	2 ICLK		
0008 C023h	PORT3	Port Output Data Register	PODR	8	8	2, 3 PCLKB	2 ICLK		
0008 C027h	PORT7	Port Output Data Register	PODR	8	8	2, 3 PCLKB	2 ICLK		
0008 C028h	PORT8	Port Output Data Register	PODR	8	8	2, 3 PCLKB	2 ICLK		Not present in versions with 64 or 48 pins.
0008 C029h	PORT9	Port Output Data Register	PODR	8	8	2, 3 PCLKB	2 ICLK		Not present in versions with 48 pins.

Downloaded from Arrow.com.

Table 4.1 List of I/O Registers (Address Order) (23/48)

Address	Module Symbol	Register Name	Register Symbol	Number of Bits	Access Size	Number of Access States		Module Name	Remarks
						ICLK ≥ PCLK	ICLK < PCLK		
0008 C02Ah	PORTA	Port Output Data Register	PODR	8	8	2, 3 PCLKB	2 ICLK	I/O Ports	
0008 C02Bh	PORTB	Port Output Data Register	PODR	8	8	2, 3 PCLKB	2 ICLK		
0008 C02Dh	PORTD	Port Output Data Register	PODR	8	8	2, 3 PCLKB	2 ICLK		
0008 C02Eh	PORTE	Port Output Data Register	PODR	8	8	2, 3 PCLKB	2 ICLK		Not present in versions with 64 or 48 pins.
0008 C02Fh	PORTF	Port Output Data Register	PODR	8	8	2, 3 PCLKB	2 ICLK		Not present in versions with 100, 64, or 48 pins.
0008 C030h	PORTG	Port Output Data Register	PODR	8	8	2, 3 PCLKB	2 ICLK		Not present in versions with 100, 64, or 48 pins.
0008 C040h	PORT0	Port Input Data Register	PIDR	8	8	2, 3 PCLKB	2 ICLK		Not present in versions with 48 pins.
0008 C041h	PORT1	Port Input Data Register	PIDR	8	8	2, 3 PCLKB	2 ICLK		Not present in versions with 48 pins.
0008 C042h	PORT2	Port Input Data Register	PIDR	8	8	2, 3 PCLKB	2 ICLK		
0008 C043h	PORT3	Port Input Data Register	PIDR	8	8	2, 3 PCLKB	2 ICLK		
0008 C044h	PORT4	Port Input Data Register	PIDR	8	8	2, 3 PCLKB	2 ICLK		
0008 C045h	PORT5	Port Input Data Register	PIDR	8	8	2, 3 PCLKB	2 ICLK		Not present in versions with 64 or 48 pins.
0008 C046h	PORT6	Port Input Data Register	PIDR	8	8	2, 3 PCLKB	2 ICLK		Not present in versions with 64 or 48 pins.
0008 C047h	PORT7	Port Input Data Register	PIDR	8	8	2, 3 PCLKB	2 ICLK		
0008 C048h	PORT8	Port Input Data Register	PIDR	8	8	2, 3 PCLKB	2 ICLK		Not present in versions with 64 or 48 pins.
0008 C049h	PORT9	Port Input Data Register	PIDR	8	8	2, 3 PCLKB	2 ICLK		Not present in versions with 48 pins.
0008 C04Ah	PORTA	Port Input Data Register	PIDR	8	8	2, 3 PCLKB	2 ICLK		
0008 C04Bh	PORTB	Port Input Data Register	PIDR	8	8	2, 3 PCLKB	2 ICLK		
0008 C04Ch	PORTC	Port Input Data Register	PIDR	8	8	2, 3 PCLKB	2 ICLK		Not present in versions with 120, 112, 100, 64, or 48 pins.
0008 C04Dh	PORTD	Port Input Data Register	PIDR	8	8	2, 3 PCLKB	2 ICLK		
0008 C04Eh	PORTE	Port Input Data Register	PIDR	8	8	2, 3 PCLKB	2 ICLK		
0008 C04Fh	PORTF	Port Input Data Register	PIDR	8	8	2, 3 PCLKB	2 ICLK		Not present in versions with 100, 64, or 48 pins.
0008 C050h	PORTG	Port Input Data Register	PIDR	8	8	2, 3 PCLKB	2 ICLK		Not present in versions with 100, 64, or 48 pins.
0008 C060h	PORT0	Port Mode Register	PMR	8	8	2, 3 PCLKB	2 ICLK		Not present in versions with 48 pins.
0008 C061h	PORT1	Port Mode Register	PMR	8	8	2, 3 PCLKB	2 ICLK		Not present in versions with 48 pins.
0008 C062h	PORT2	Port Mode Register	PMR	8	8	2, 3 PCLKB	2 ICLK		
0008 C063h	PORT3	Port Mode Register	PMR	8	8	2, 3 PCLKB	2 ICLK		
0008 C067h	PORT7	Port Mode Register	PMR	8	8	2, 3 PCLKB	2 ICLK		
0008 C068h	PORT8	Port Mode Register	PMR	8	8	2, 3 PCLKB	2 ICLK		Not present in versions with 64 or 48 pins.
0008 C069h	PORT9	Port Mode Register	PMR	8	8	2, 3 PCLKB	2 ICLK		Not present in versions with 48 pins.
0008 C06Ah	PORTA	Port Mode Register	PMR	8	8	2, 3 PCLKB	2 ICLK		
0008 C06Bh	PORTB	Port Mode Register	PMR	8	8	2, 3 PCLKB	2 ICLK		
0008 C06Dh	PORTD	Port Mode Register	PMR	8	8	2, 3 PCLKB	2 ICLK		
0008 C06Eh	PORTE	Port Mode Register	PMR	8	8	2, 3 PCLKB	2 ICLK		
0008 C06Fh	PORTF	Port Mode Register	PMR	8	8	2, 3 PCLKB	2 ICLK		Not present in versions with 100, 64, or 48 pins.
0008 C070h	PORTG	Port Mode Register	PMR	8	8	2, 3 PCLKB	2 ICLK		Not present in versions with 100, 64, or 48 pins.
0008 C080h	PORT0	Open Drain Control Register 0	ODR0	8	8	2, 3 PCLKB	2 ICLK		Not present in versions with 120, 112, 100, 64 or 48 pins.
0008 C084h	PORT2	Open Drain Control Register 0	ODR0	8	8	2, 3 PCLKB	2 ICLK		Not present in versions with 64 or 48 pins.
0008 C085h	PORT2	Open Drain Control Register 1	ODR1	8	8	2, 3 PCLKB	2 ICLK		Not present in versions with 112 or 100 pins.

Downloaded from Arrow.com.

Table 4.1 List of I/O Registers (Address Order) (24/48)

Address	Module Symbol	Register Name	Register Symbol	Number of Bits	Access Size	Number of Access States		Module Name	Remarks
						ICLK ≥ PCLK	ICLK < PCLK		
0008 C086h	PORT3	Open Drain Control Register 0	ODR0	8	8	2, 3 PCLKB	2 ICLK	I/O Ports	Not present in versions with 144, 120, 112, or 100 pins.
0008 C087h	PORT3	Open Drain Control Register 1	ODR1	8	8	2, 3 PCLKB	2 ICLK		Not present in versions with 120, 112, 100, 64 or 48 pins.
0008 C090h	PORT8	Open Drain Control Register 0	ODR0	8	8	2, 3 PCLKB	2 ICLK		Not present in versions with 64 or 48 pins.
0008 C092h	PORT9	Open Drain Control Register 0	ODR0	8	8	2, 3 PCLKB	2 ICLK		Not present in versions with 144, 120, 112, 100 or 48 pins.
0008 C093h	PORT9	Open Drain Control Register 1	ODR1	8	8	2, 3 PCLKB	2 ICLK		Not present in versions with 48 pins.
0008 C094h	PORTA	Open Drain Control Register 0	ODR0	8	8	2, 3 PCLKB	2 ICLK		Not present in versions with 64 or 48 pins.
0008 C095h	PORTA	Open Drain Control Register 1	ODR1	8	8	2, 3 PCLKB	2 ICLK		Not present in versions with 64 or 48 pins.
0008 C096h	PORTB	Open Drain Control Register 0	ODR0	8	8	2, 3 PCLKB	2 ICLK		
0008 C097h	PORTB	Open Drain Control Register 1	ODR1	8	8	2, 3 PCLKB	2 ICLK		
0008 C09Ah	PORTD	Open Drain Control Register 0	ODR0	8	8	2, 3 PCLKB	2 ICLK		
0008 C09Bh	PORTD	Open Drain Control Register 1	ODR1	8	8	2, 3 PCLKB	2 ICLK		
0008 C09Eh	PORTF	Open Drain Control Register 0	ODR0	8	8	2, 3 PCLKB	2 ICLK		Not present in versions with 100, 64, or 48 pins.
0008 C0A0h	PORTG	Open Drain Control Register 0	ODR0	8	8	2, 3 PCLKB	2 ICLK		Not present in versions with 100, 64, or 48 pins.
0008 C0A1h	PORTG	Open Drain Control Register 1	ODR1	8	8	2, 3 PCLKB	2 ICLK		Not present in versions with 100, 64, or 48 pins.
0008 C0F2h	PORT	Driving Ability Control Register 1	DSCR1	8	8	2, 3 PCLKB	2 ICLK		Not present in versions with 64 or 48 pins.
0008 C0F3h	PORT	Driving Ability Control Register 2	DSCR2	8	8	2, 3 PCLKB	2 ICLK		Not present in versions with 64 or 48 pins.
0008 C100h	MPC	CS Output Enable Register	PFCSE	8	8	2, 3 PCLKB	2 ICLK	MPC	Not present in versions with 64 or 48 pins.
0008 C102h	MPC	CS Output Pin Select Register 0	PFCSS0	8	8	2, 3 PCLKB	2 ICLK		Not present in versions with 64 or 48 pins.
0008 C104h	MPC	Address Output Enable Register 0	PFAOE0	8	8	2, 3 PCLKB	2 ICLK		Not present in versions with 64 or 48 pins.
0008 C105h	MPC	Address Output Enable Register 1	PFAOE1	8	8	2, 3 PCLKB	2 ICLK		Not present in versions with 64 or 48 pins.
0008 C106h	MPC	External Bus Control Register 0	PFBCR0	8	8	2, 3 PCLKB	2 ICLK		Not present in versions with 64 or 48 pins.
0008 C107h	MPC	External Bus Control Register 1	PFBCR1	8	8	2, 3 PCLKB	2 ICLK		Not present in versions with 64 or 48 pins.
0008 C114h	MPC	USB0 Control Register	PFUSB0	8	8	2, 3 PCLKB	2 ICLK		Not present in versions with 112, 100, 64, or 48 pins.
0008 C11Fh	MPC	Write-Protect Register	PWPR	8	8	2, 3 PCLKB	2 ICLK		
0008 C140h	MPC	P00 Pin Function Control Register	P00PFS	8	8	2, 3 PCLKB	2 ICLK		Not present in versions with 48 pins.
0008 C141h	MPC	P01 Pin Function Control Register	P01PFS	8	8	2, 3 PCLKB	2 ICLK		Not present in versions with 48 pins.
0008 C142h	MPC	P02 Pin Function Control Register	P02PFS	8	8	2, 3 PCLKB	2 ICLK		Not present in versions with 120, 112, 100, 64, or 48 pins.
0008 C143h	MPC	P03 Pin Function Control Register	P03PFS	8	8	2, 3 PCLKB	2 ICLK		Not present in versions with 120, 112, 100, 64, or 48 pins.
0008 C148h	MPC	P10 Pin Function Control Register	P10PFS	8	8	2, 3 PCLKB	2 ICLK		Not present in versions with 48 pins.
0008 C149h	MPC	P11 Pin Function Control Register	P11PFS	8	8	2, 3 PCLKB	2 ICLK		Not present in versions with 48 pins.
0008 C14Ah	MPC	P12 Pin Function Control Register	P12PFS	8	8	2, 3 PCLKB	2 ICLK		Not present in versions with 100, 64, or 48 pins.
0008 C14Bh	MPC	P13 Pin Function Control Register	P13PFS	8	8	2, 3 PCLKB	2 ICLK		Not present in versions with 112, 100, 64, or 48 pins.

Downloaded from Arrow.com.

Table 4.1 List of I/O Registers (Address Order) (25/48)

Address	Module Symbol	Register Name	Register Symbol	Number of Bits	Access Size	Number of Access States		Module Name	Remarks
						ICLK ≥ PCLK	ICLK < PCLK		
0008 C14Ch	MPC	P14 Pin Function Control Register	P14PFS	8	8	2, 3 PCLKB	2 ICLK	MPC	Not present in versions with 120, 112, 100, 64, or 48 pins.
0008 C150h	MPC	P20 Pin Function Control Register	P20PFS	8	8	2, 3 PCLKB	2 ICLK		Not present in versions with 64 or 48 pins.
0008 C151h	MPC	P21 Pin Function Control Register	P21PFS	8	8	2, 3 PCLKB	2 ICLK		Not present in versions with 64 or 48 pins.
0008 C152h	MPC	P22 Pin Function Control Register	P22PFS	8	8	2, 3 PCLKB	2 ICLK		
0008 C153h	MPC	P23 Pin Function Control Register	P23PFS	8	8	2, 3 PCLKB	2 ICLK		
0008 C154h	MPC	P24 Pin Function Control Register	P24PFS	8	8	2, 3 PCLKB	2 ICLK		
0008 C155h	MPC	P25 Pin Function Control Register	P25PFS	8	8	2, 3 PCLKB	2 ICLK		Not present in versions with 112, 100, 64, or 48 pins.
0008 C156h	MPC	P26 Pin Function Control Register	P26PFS	8	8	2, 3 PCLKB	2 ICLK		Not present in versions with 112, 100, 64, or 48 pins.
0008 C158h	MPC	P30 Pin Function Control Register	P30PFS	8	8	2, 3 PCLKB	2 ICLK		
0008 C159h	MPC	P31 Pin Function Control Register	P31PFS	8	8	2, 3 PCLKB	2 ICLK		Not present in versions with 48 pins.
0008 C15Ah	MPC	P32 Pin Function Control Register	P32PFS	8	8	2, 3 PCLKB	2 ICLK		Not present in versions with 48 pins.
0008 C15Bh	MPC	P33 Pin Function Control Register	P33PFS	8	8	2, 3 PCLKB	2 ICLK		Not present in versions with 48 pins.
0008 C15Ch	MPC	P34 Pin Function Control Register	P34PFS	8	8	2, 3 PCLKB	2 ICLK		Not present in versions with 120, 112, 100, 64, or 48 pins.
0008 C15Dh	MPC	P35 Pin Function Control Register	P35PFS	8	8	2, 3 PCLKB	2 ICLK		Not present in versions with 120, 112, 100, 64, or 48 pins.
0008 C160h	MPC	P40 Pin Function Control Register	P40PFS	8	8	2, 3 PCLKB	2 ICLK		
0008 C161h	MPC	P41 Pin Function Control Register	P41PFS	8	8	2, 3 PCLKB	2 ICLK		
0008 C162h	MPC	P42 Pin Function Control Register	P42PFS	8	8	2, 3 PCLKB	2 ICLK		
0008 C163h	MPC	P43 Pin Function Control Register	P43PFS	8	8	2, 3 PCLKB	2 ICLK		
0008 C164h	MPC	P44 Pin Function Control Register	P44PFS	8	8	2, 3 PCLKB	2 ICLK		
0008 C165h	MPC	P45 Pin Function Control Register	P45PFS	8	8	2, 3 PCLKB	2 ICLK		Not present in versions with 48 pins.
0008 C166h	MPC	P46 Pin Function Control Register	P46PFS	8	8	2, 3 PCLKB	2 ICLK		Not present in versions with 48 pins.
0008 C167h	MPC	P47 Pin Function Control Register	P47PFS	8	8	2, 3 PCLKB	2 ICLK		
0008 C168h	MPC	P50 Pin Function Control Register	P50PFS	8	8	2, 3 PCLKB	2 ICLK		Not present in versions with 64 or 48 pins.
0008 C169h	MPC	P51 Pin Function Control Register	P51PFS	8	8	2, 3 PCLKB	2 ICLK		Not present in versions with 64 or 48 pins.
0008 C16Ah	MPC	P52 Pin Function Control Register	P52PFS	8	8	2, 3 PCLKB	2 ICLK		Not present in versions with 64 or 48 pins.
0008 C16Bh	MPC	P53 Pin Function Control Register	P53PFS	8	8	2, 3 PCLKB	2 ICLK		Not present in versions with 64 or 48 pins.
0008 C16Ch	MPC	P54 Pin Function Control Register	P54PFS	8	8	2, 3 PCLKB	2 ICLK		Not present in versions with 64 or 48 pins.
0008 C16Dh	MPC	P55 Pin Function Control Register	P55PFS	8	8	2, 3 PCLKB	2 ICLK		Not present in versions with 64 or 48 pins.
0008 C16Eh	MPC	P56 Pin Function Control Register	P56PFS	8	8	2, 3 PCLKB	2 ICLK		Not present in versions with 120, 112, 100, 64, or 48 pins.
0008 C16Fh	MPC	P57 Pin Function Control Register	P57PFS	8	8	2, 3 PCLKB	2 ICLK		Not present in versions with 120, 112, 100, 64, or 48 pins.
0008 C170h	MPC	P60 Pin Function Control Register	P60PFS	8	8	2, 3 PCLKB	2 ICLK		Not present in versions with 64 or 48 pins.
0008 C171h	MPC	P61 Pin Function Control Register	P61PFS	8	8	2, 3 PCLKB	2 ICLK		Not present in versions with 64 or 48 pins.
0008 C172h	MPC	P62 Pin Function Control Register	P62PFS	8	8	2, 3 PCLKB	2 ICLK		Not present in versions with 64 or 48 pins.
0008 C173h	MPC	P63 Pin Function Control Register	P63PFS	8	8	2, 3 PCLKB	2 ICLK		Not present in versions with 64 or 48 pins.

Downloaded from Arrow.com.

Table 4.1 List of I/O Registers (Address Order) (26/48)

Address	Module Symbol	Register Name	Register Symbol	Number of Bits	Access Size	Number of Access States		Module Name	Remarks
						ICLK ≥ PCLK	ICLK < PCLK		
0008 C174h	MPC	P64 Pin Function Control Register	P64PFS	8	8	2, 3 PCLKB	2 ICLK	MPC	Not present in versions with 64 or 48 pins.
0008 C175h	MPC	P65 Pin Function Control Register	P65PFS	8	8	2, 3 PCLKB	2 ICLK		Not present in versions with 64 or 48 pins.
0008 C178h	MPC	P70 Pin Function Control Register	P70PFS	8	8	2, 3 PCLKB	2 ICLK		
0008 C179h	MPC	P71 Pin Function Control Register	P71PFS	8	8	2, 3 PCLKB	2 ICLK		
0008 C17Ah	MPC	P72 Pin Function Control Register	P72PFS	8	8	2, 3 PCLKB	2 ICLK		
0008 C17Bh	MPC	P73 Pin Function Control Register	P73PFS	8	8	2, 3 PCLKB	2 ICLK		
0008 C17Ch	MPC	P74 Pin Function Control Register	P74PFS	8	8	2, 3 PCLKB	2 ICLK		
0008 C17Dh	MPC	P75 Pin Function Control Register	P75PFS	8	8	2, 3 PCLKB	2 ICLK		
0008 C17Eh	MPC	P76 Pin Function Control Register	P76PFS	8	8	2, 3 PCLKB	2 ICLK		
0008 C180h	MPC	P80 Pin Function Control Register	P80PFS	8	8	2, 3 PCLKB	2 ICLK		Not present in versions with 64 or 48 pins.
0008 C181h	MPC	P81 Pin Function Control Register	P81PFS	8	8	2, 3 PCLKB	2 ICLK		Not present in versions with 64 or 48 pins.
0008 C182h	MPC	P82 Pin Function Control Register	P82PFS	8	8	2, 3 PCLKB	2 ICLK		Not present in versions with 64 or 48 pins.
0008 C188h	MPC	P90 Pin Function Control Register	P90PFS	8	8	2, 3 PCLKB	2 ICLK		Not present in versions with 64 or 48 pins.
0008 C189h	MPC	P91 Pin Function Control Register	P91PFS	8	8	2, 3 PCLKB	2 ICLK		Not present in versions with 48 pins.
0008 C18Ah	MPC	P92 Pin Function Control Register	P92PFS	8	8	2, 3 PCLKB	2 ICLK		Not present in versions with 48 pins.
0008 C18Bh	MPC	P93 Pin Function Control Register	P93PFS	8	8	2, 3 PCLKB	2 ICLK		Not present in versions with 48 pins.
0008 C18Ch	MPC	P94 Pin Function Control Register	P94PFS	8	8	2, 3 PCLKB	2 ICLK		Not present in versions with 48 pins.
0008 C18Dh	MPC	P95 Pin Function Control Register	P95PFS	8	8	2, 3 PCLKB	2 ICLK		Not present in versions with 64 or 48 pins.
0008 C18Eh	MPC	P96 Pin Function Control Register	P96PFS	8	8	2, 3 PCLKB	2 ICLK		Not present in versions with 64 or 48 pins.
0008 C190h	MPC	PA0 Pin Function Control Register	PA0PFS	8	8	2, 3 PCLKB	2 ICLK		Not present in versions with 64 or 48 pins.
0008 C191h	MPC	PA1 Pin Function Control Register	PA1PFS	8	8	2, 3 PCLKB	2 ICLK		Not present in versions with 64 or 48 pins.
0008 C192h	MPC	PA2 Pin Function Control Register	PA2PFS	8	8	2, 3 PCLKB	2 ICLK		
0008 C193h	MPC	PA3 Pin Function Control Register	PA3PFS	8	8	2, 3 PCLKB	2 ICLK		
0008 C194h	MPC	PA4 Pin Function Control Register	PA4PFS	8	8	2, 3 PCLKB	2 ICLK		Not present in versions with 48 pins.
0008 C195h	MPC	PA5 Pin Function Control Register	PA5PFS	8	8	2, 3 PCLKB	2 ICLK		Not present in versions with 48 pins.
0008 C196h	MPC	PA6 Pin Function Control Register	PA6PFS	8	8	2, 3 PCLKB	2 ICLK		Not present in versions with 120, 112, 100, 64 or 48 pins.
0008 C198h	MPC	PB0 Pin Function Control Register	PB0PFS	8	8	2, 3 PCLKB	2 ICLK		
0008 C199h	MPC	PB1 Pin Function Control Register	PB1PFS	8	8	2, 3 PCLKB	2 ICLK		
0008 C19Ah	MPC	PB2 Pin Function Control Register	PB2PFS	8	8	2, 3 PCLKB	2 ICLK		
0008 C19Bh	MPC	PB3 Pin Function Control Register	PB3PFS	8	8	2, 3 PCLKB	2 ICLK		
0008 C19Ch	MPC	PB4 Pin Function Control Register	PB4PFS	8	8	2, 3 PCLKB	2 ICLK		
0008 C19Dh	MPC	PB5 Pin Function Control Register	PB5PFS	8	8	2, 3 PCLKB	2 ICLK		
0008 C19Eh	MPC	PB6 Pin Function Control Register	PB6PFS	8	8	2, 3 PCLKB	2 ICLK		
0008 C19Fh	MPC	PB7 Pin Function Control Register	PB7PFS	8	8	2, 3 PCLKB	2 ICLK		Not present in versions with 48 pins.
0008 C1A0h	MPC	PC0 Pin Function Control Register	PC0PFS	8	8	2, 3 PCLKB	2 ICLK		Not present in versions with 120, 112, 100, 64, or 48 pins.
0008 C1A1h	MPC	PC1 Pin Function Control Register	PC1PFS	8	8	2, 3 PCLKB	2 ICLK		Not present in versions with 120, 112, 100, 64, or 48 pins.
0008 C1A2h	MPC	PC2 Pin Function Control Register	PC2PFS	8	8	2, 3 PCLKB	2 ICLK		Not present in versions with 120, 112, 100, 64, or 48 pins.

Downloaded from Arrow.com.

Table 4.1 List of I/O Registers (Address Order) (27/48)

Address	Module Symbol	Register Name	Register Symbol	Number of Bits	Access Size	Number of Access States		Module Name	Remarks
						ICLK ≥ PCLK	ICLK < PCLK		
0008 C1A3h	MPC	PC3 Pin Function Control Register	PC3PFS	8	8	2, 3 PCLKB	2 ICLK	MPC	Not present in versions with 120, 112, 100, 64, or 48 pins.
0008 C1A4h	MPC	PC4 Pin Function Control Register	PC4PFS	8	8	2, 3 PCLKB	2 ICLK		Not present in versions with 120, 112, 100, 64, or 48 pins.
0008 C1A5h	MPC	PC5 Pin Function Control Register	PC5PFS	8	8	2, 3 PCLKB	2 ICLK		Not present in versions with 120, 112, 100, 64, or 48 pins.
0008 C1A8h	MPC	PD0 Pin Function Control Register	PD0PFS	8	8	2, 3 PCLKB	2 ICLK		Not present in versions with 64 or 48 pins.
0008 C1A9h	MPC	PD1 Pin Function Control Register	PD1PFS	8	8	2, 3 PCLKB	2 ICLK		Not present in versions with 64 or 48 pins.
0008 C1AAh	MPC	PD2 Pin Function Control Register	PD2PFS	8	8	2, 3 PCLKB	2 ICLK		Not present in versions with 64 or 48 pins.
0008 C1ABh	MPC	PD3 Pin Function Control Register	PD3PFS	8	8	2, 3 PCLKB	2 ICLK		
0008 C1ACh	MPC	PD4 Pin Function Control Register	PD4PFS	8	8	2, 3 PCLKB	2 ICLK		
0008 C1ADh	MPC	PD5 Pin Function Control Register	PD5PFS	8	8	2, 3 PCLKB	2 ICLK		
0008 C1AEh	MPC	PD6 Pin Function Control Register	PD6PFS	8	8	2, 3 PCLKB	2 ICLK		
0008 C1AFh	MPC	PD7 Pin Function Control Register	PD7PFS	8	8	2, 3 PCLKB	2 ICLK		
0008 C1B0h	MPC	PE0 Pin Function Control Register	PE0PFS	8	8	2, 3 PCLKB	2 ICLK		Not present in versions with 64 or 48 pins.
0008 C1B1h	MPC	PE1 Pin Function Control Register	PE1PFS	8	8	2, 3 PCLKB	2 ICLK		Not present in versions with 64 or 48 pins.
0008 C1B2h	MPC	PE2 Pin Function Control Register	PE2PFS	8	8	2, 3 PCLKB	2 ICLK		
0008 C1B3h	MPC	PE3 Pin Function Control Register	PE3PFS	8	8	2, 3 PCLKB	2 ICLK		Not present in versions with 64 or 48 pins.
0008 C1B4h	MPC	PE4 Pin Function Control Register	PE4PFS	8	8	2, 3 PCLKB	2 ICLK		Not present in versions with 64 or 48 pins.
0008 C1B5h	MPC	PE5 Pin Function Control Register	PE5PFS	8	8	2, 3 PCLKB	2 ICLK		Not present in versions with 64 or 48 pins.
0008 C1BAh	MPC	PF2 Pin Function Control Register	PF2PFS	8	8	2, 3 PCLKB	2 ICLK		Not present in versions with 100, 64, or 48 pins.
0008 C1BBh	MPC	PF3 Pin Function Control Register	PF3PFS	8	8	2, 3 PCLKB	2 ICLK		Not present in versions with 100, 64, or 48 pins.
0008 C1C0h	MPC	PG0 Pin Function Control Register	PG0PFS	8	8	2, 3 PCLKB	2 ICLK		Not present in versions with 100, 64, or 48 pins.
0008 C1C1h	MPC	PG1 Pin Function Control Register	PG1PFS	8	8	2, 3 PCLKB	2 ICLK		Not present in versions with 100, 64, or 48 pins.
0008 C1C2h	MPC	PG2 Pin Function Control Register	PG2PFS	8	8	2, 3 PCLKB	2 ICLK		Not present in versions with 100, 64, or 48 pins.
0008 C1C3h	MPC	PG3 Pin Function Control Register	PG3PFS	8	8	2, 3 PCLKB	2 ICLK		Not present in versions with 100, 64, or 48 pins.
0008 C1C4h	MPC	PG4 Pin Function Control Register	PG4PFS	8	8	2, 3 PCLKB	2 ICLK		Not present in versions with 100, 64, or 48 pins.
0008 C1C5h	MPC	PG5 Pin Function Control Register	PG5PFS	8	8	2, 3 PCLKB	2 ICLK		Not present in versions with 100, 64, or 48 pins.
0008 C1C6h	MPC	PG6 Pin Function Control Register	PG6PFS	8	8	2, 3 PCLKB	2 ICLK		Not present in versions with 112, 100, 64, or 48 pins.
0008 C1D0h	MPC	USB0_DPUPE Pin Function Control Register	UDPUPEPFS	8	8	2, 3 PCLKB	2 ICLK		Not present in versions with 112, 100, 64, or 48 pins.
0008 C280h	SYSTEM	Deep Standby Control Register	DPSBYCR	8	8	4, 5 PCLKB	2, 3 ICLK	Low Power Consumption	
0008 C282h	SYSTEM	Deep Standby Interrupt Enable Register 0	DPSIER0	8	8	4, 5 PCLKB	2, 3 ICLK		
0008 C284h	SYSTEM	Deep Standby Interrupt Enable Register 2	DPSIER2	8	8	4, 5 PCLKB	2, 3 ICLK		
0008 C286h	SYSTEM	Deep Standby Interrupt Flag Register 0	DPSIFR0	8	8	4, 5 PCLKB	2, 3 ICLK		
0008 C288h	SYSTEM	Deep Standby Interrupt Flag Register 2	DPSIFR2	8	8	4, 5 PCLKB	2, 3 ICLK		
0008 C28Ah	SYSTEM	Deep Standby Interrupt Edge Register 0	DPSIEGR0	8	8	4, 5 PCLKB	2, 3 ICLK		
0008 C28Ch	SYSTEM	Deep Standby Interrupt Edge Register 2	DPSIEGR2	8	8	4, 5 PCLKB	2, 3 ICLK		
0008 C290h	SYSTEM	Reset Status Register 0	RSTSR0	8	8	4, 5 PCLKB	2, 3 ICLK	Resets	
0008 C291h	SYSTEM	Reset Status Register 1	RSTSR1	8	8	4, 5 PCLKB	2, 3 ICLK		

Downloaded from Arrow.com.

Table 4.1 List of I/O Registers (Address Order) (28/48)

Address	Module Symbol	Register Name	Register Symbol	Number of Bits	Access Size	Number of Access States		Module Name	Remarks
						ICLK ≥ PCLK	ICLK < PCLK		
0008 C293h	SYSTEM	Main Clock Oscillator Forced Oscillation Control Register	MOFCR	8	8	4, 5 PCLKB	2, 3 ICLK	Clock Generation Circuit	
0008 C296h	FLASH	Flash P/E Protection Register	FWEPROR	8	8	4, 5 PCLKB	2, 3 ICLK	ROM	
0008 C297h	SYSTEM	Voltage Monitoring Circuit Control Register	LVCMPCR	8	8	4, 5 PCLKB	2, 3 ICLK	LVDA	
0008 C298h	SYSTEM	Voltage Detection Level Select Register	LVDLVLR	8	8	4, 5 PCLKB	2, 3 ICLK		
0008 C29Ah	SYSTEM	Voltage Monitoring 1 Circuit Control Register 0	LVD1CR0	8	8	4, 5 PCLKB	2, 3 ICLK		
0008 C29Bh	SYSTEM	Voltage Monitoring 2 Circuit Control Register 0	LVD2CR0	8	8	4, 5 PCLKB	2, 3 ICLK		
0008 C2A0h to 0008 C2BFh	SYSTEM	Deep Standby Backup Register 0 to 31	DPSBKR0 to 31	8	8	4, 5 PCLKB	2, 3 ICLK	Low Power Consumption	
0008 C300h	ICU	Group 0 Interrupt Source Register	GRP00	32	32	1, 2 PCLKB	2 ICLK	ICUb	Not present in versions with 64 or 48 pins.
0008 C330h	ICU	Group 12 Interrupt Source Register	GRP12	32	32	1, 2 PCLKB	2 ICLK		
0008 C340h	ICU	Group 0 Interrupt Enable Register	GEN00	32	32	1, 2 PCLKB	2 ICLK		Not present in versions with 64 or 48 pins.
0008 C370h	ICU	Group 12 Interrupt Enable Register	GEN12	32	32	1, 2 PCLKB	2 ICLK		
0008 C380h	ICU	Group 0 Interrupt Clear Register	GCR00	32	32	1, 2 PCLKB	2 ICLK		Not present in versions with 64 or 48 pins.
0008 C4C0h	POE	Input Level Control/Status Register 1	ICSR1	16	8, 16	2, 3 PCLKB	2 ICLK	POE3	
0008 C4C2h	POE	Output Level Control/Status Register 1	OCSR1	16	8, 16	2, 3 PCLKB	2 ICLK		
0008 C4C4h	POE	Input Level Control/Status Register 2	ICSR2	16	8, 16	2, 3 PCLKB	2 ICLK		Not present in versions with 64 or 48 pins.
0008 C4C6h	POE	Output Level Control/Status Register 2	OCSR2	16	8, 16	2, 3 PCLKB	2 ICLK		Not present in versions with 64 or 48 pins.
0008 C4C8h	POE	Input Level Control/Status Register 3	ICSR3	16	8, 16	2, 3 PCLKB	2 ICLK		
0008 C4CAh	POE	Software Port Output Enable Register	SPOER	8	8	2, 3 PCLKB	2 ICLK		
0008 C4CBh	POE	Port Output Enable Control Register 1	POECR1	8	8	2, 3 PCLKB	2 ICLK		
0008 C4CCh	POE	Port Output Enable Control Register 2	POECR2	16	16	2, 3 PCLKB	2 ICLK		
0008 C4CEh	POE	Port Output Enable Control Register 3	POECR3	16	16	2, 3 PCLKB	2 ICLK		
0008 C4D0h	POE	Port Output Enable Control Register 4	POECR4	16	16	2, 3 PCLKB	2 ICLK		
0008 C4D2h	POE	Port Output Enable Control Register 5	POECR5	16	16	2, 3 PCLKB	2 ICLK		
0008 C4D4h	POE	Port Output Enable Control Register 6	POECR6	16	16	2, 3 PCLKB	2 ICLK		
0008 C4D6h	POE	Input Level Control/Status Register 4	ICSR4	16	8, 16	2, 3 PCLKB	2 ICLK		
0008 C4D8h	POE	Input Level Control/Status Register 5	ICSR5	16	8, 16	2, 3 PCLKB	2 ICLK		
0008 C4DAh	POE	Active Level Setting Register 1	ALR1	16	8, 16	2, 3 PCLKB	2 ICLK		
0008 C4DCh	POE	Input Level Control/Status Register 6	ICSR6	16	16	2, 3 PCLKB	2 ICLK		
0008 C4DEh	POE	Active Level Setting Register 2	ALR2	16	8, 16	2, 3 PCLKB	2 ICLK		Not present in versions with 64 or 48 pins.
0008 C4E0h	POE	Input Level Control/Status Register 7	ICSR7	16	8, 16	2, 3 PCLKB	2 ICLK		Not present in versions with 64 or 48 pins.
0008 C4E2h	POE	Port Output Enable Control Register 7	POECR7	16	16	2, 3 PCLKB	2 ICLK		Not present in versions with 64 or 48 pins.
0008 C4E4h	POE	Port Output Enable Control Register 8	POECR8	16	16	2, 3 PCLKB	2 ICLK		Not present in versions with 64 or 48 pins.
0009 1200h to 0009 13FFh	CAN1	Mailbox Register 0 to 31	MB0 to 31	128	8, 16, 32	2, 3 PCLKB	2 ICLK	CAN	Not present in versions with 64 or 48 pins.
0009 1400h to 0009 141Ch	CAN1	Mask Register 0 to 7	MKR0 to 7	32	8, 16, 32	2, 3 PCLKB	2 ICLK		Not present in versions with 64 or 48 pins.
0009 1420h	CAN1	FIFO Received ID Compare Register 0 and 1	FIDCR0	32	8, 16, 32	2, 3 PCLKB	2 ICLK		Not present in versions with 64 or 48 pins.
0009 1424h	CAN1	FIFO Received ID Compare Register 0 and 1	FIDCR1	32	8, 16, 32	2, 3 PCLKB	2 ICLK		Not present in versions with 64 or 48 pins.
0009 1428h	CAN1	Mask Invalid Register	MKIVLR	32	8, 16, 32	2, 3 PCLKB	2 ICLK		Not present in versions with 64 or 48 pins.
0009 142Ch	CAN1	Mailbox Interrupt Enable Register	MIER	32	8, 16, 32	2, 3 PCLKB	2 ICLK		Not present in versions with 64 or 48 pins.
0009 1820h to 0009 183Fh	CAN1	Message Control Register 0 to 31	MCTL0 to 31	8	8	2, 3 PCLKB	2 ICLK		Not present in versions with 64 or 48 pins.

Downloaded from Arrow.com.

Table 4.1 List of I/O Registers (Address Order) (29/48)

Address	Module Symbol	Register Name	Register Symbol	Number of Bits	Access Size	Number of Access States		Module Name	Remarks
						ICLK ≥ PCLK	ICLK < PCLK		
0009 1840h	CAN1	Control Register	CTLR	16	8, 16	2, 3 PCLKB	2 ICLK	CAN	Not present in versions with 64 or 48 pins.
0009 1842h	CAN1	Status Register	STR	16	8, 16	2, 3 PCLKB	2 ICLK		Not present in versions with 64 or 48 pins.
0009 1844h	CAN1	Bit Configuration Register	BCR	32	8, 16, 32	2, 3 PCLKB	2 ICLK		Not present in versions with 64 or 48 pins.
0009 1848h	CAN1	Receive FIFO Control Register	RFCR	8	8	2, 3 PCLKB	2 ICLK		Not present in versions with 64 or 48 pins.
0009 1849h	CAN1	Receive FIFO Pointer Control Register	RFPCR	8	8	2, 3 PCLKB	2 ICLK		Not present in versions with 64 or 48 pins.
0009 184Ah	CAN1	Transmit FIFO Control Register	TFCR	8	8	2, 3 PCLKB	2 ICLK		Not present in versions with 64 or 48 pins.
0009 184Bh	CAN1	Transmit FIFO Pointer Control Register	TFPCR	8	8	2, 3 PCLKB	2 ICLK		Not present in versions with 64 or 48 pins.
0009 184Ch	CAN1	Error Interrupt Enable Register	EIER	8	8	2, 3 PCLKB	2 ICLK		Not present in versions with 64 or 48 pins.
0009 184Dh	CAN1	Error Interrupt Factor Judge Register	EIFR	8	8	2, 3 PCLKB	2 ICLK		Not present in versions with 64 or 48 pins.
0009 184Eh	CAN1	Receive Error Count Register	RECR	8	8	2, 3 PCLKB	2 ICLK		Not present in versions with 64 or 48 pins.
0009 184Fh	CAN1	Transmit Error Count Register	TECR	8	8	2, 3 PCLKB	2 ICLK		Not present in versions with 64 or 48 pins.
0009 1850h	CAN1	Error Code Store Register	ECSR	8	8	2, 3 PCLKB	2 ICLK		Not present in versions with 64 or 48 pins.
0009 1851h	CAN1	Channel Search Support Register	CSSR	8	8	2, 3 PCLKB	2 ICLK		Not present in versions with 64 or 48 pins.
0009 1852h	CAN1	Mailbox Search Status Register	MSSR	8	8	2, 3 PCLKB	2 ICLK		Not present in versions with 64 or 48 pins.
0009 1853h	CAN1	Mailbox Search Mode Register	MSMR	8	8	2, 3 PCLKB	2 ICLK		Not present in versions with 64 or 48 pins.
0009 1854h	CAN1	Time Stamp Register	TSR	16	8, 16	2, 3 PCLKB	2 ICLK		Not present in versions with 64 or 48 pins.
0009 1856h	CAN1	Acceptance Filter Support Register	AFSR	16	8, 16	2, 3 PCLKB	2 ICLK		Not present in versions with 64 or 48 pins.
0009 1858h	CAN1	Test Control Register	TCR	8	8	2, 3 PCLKB	2 ICLK		Not present in versions with 64 or 48 pins.
000A 0000h	USB0	System Configuration Control Register	SYSCFG	16	16	3, 4 PCLKB	2, 3 ICLK	USBa	Not present in versions with 112, 100, 64, or 48 pins.
000A 0004h	USB0	System Configuration Status Register 0	SYSSTS0	16	16	9 PCLKB or more			Not present in versions with 112, 100, 64, or 48 pins.
000A 0008h	USB0	Device State Control Register 0	DVSTCTR0	16	16	9 PCLKB or more			Not present in versions with 112, 100, 64, or 48 pins.
000A 0014h	USB0	CFIFO Port Register	CFIFO	16	8, 16	3, 4 PCLKB	2, 3 ICLK		Not present in versions with 112, 100, 64, or 48 pins.
000A 0018h	USB0	D0FIFO Port Registe	D0FIFO	16	8, 16	3, 4 PCLKB	2, 3 ICLK		Not present in versions with 112, 100, 64, or 48 pins.
000A 001Ch	USB0	D1FIFO Port Register	D1FIFO	16	8, 16	3, 4 PCLKB	2, 3 ICLK		Not present in versions with 112, 100, 64, or 48 pins.
000A 0020h	USB0	CFIFO Port Select Register	CFIFOSEL	16	16	3, 4 PCLKB	2, 3 ICLK		Not present in versions with 112, 100, 64, or 48 pins.
000A 0022h	USB0	CFIFO Port Control Register	CFIFOCTR	16	16	3, 4 PCLKB	2, 3 ICLK		Not present in versions with 112, 100, 64, or 48 pins.
000A 0028h	USB0	D0FIFO Port Select Register	D0FIFOSEL	16	16	3, 4 PCLKB	2, 3 ICLK		Not present in versions with 112, 100, 64, or 48 pins.
000A 002Ah	USB0	D0FIFO Port Control Register	D0FIFOCTR	16	16	3, 4 PCLKB	2, 3 ICLK		Not present in versions with 112, 100, 64, or 48 pins.
000A 002Ch	USB0	D1FIFO Port Select Register	D1FIFOSEL	16	16	3, 4 PCLKB	2, 3 ICLK		Not present in versions with 112, 100, 64, or 48 pins.

Downloaded from Arrow.com.

Table 4.1 List of I/O Registers (Address Order) (30/48)

Address	Module Symbol	Register Name	Register Symbol	Number of Bits	Access Size	Number of Access States		Module Name	Remarks
						ICLK ≥ PCLK	ICLK < PCLK		
000A 002Eh	USB0	D1FIFO Port Control Register	D1FIFOCTR	16	16	3, 4 PCLKB	2, 3 ICLK	USBa	Not present in versions with 112, 100, 64, or 48 pins.
000A 0030h	USB0	Interrupt Enable Register 0	INTENB0	16	16	9 PCLKB or more	Rounded up to the nearest integer greater than 1 + 9/(frequency ratio of ICLK/PCLKB)*1		Not present in versions with 112, 100, 64, or 48 pins.
000A 0032h	USB0	Interrupt Enable Register 1	INTENB1	16	16	9 PCLKB or more	Rounded up to the nearest integer greater than 1 + 9/(frequency ratio of ICLK/PCLKB)*1		Not present in versions with 112, 100, 64, or 48 pins.
000A 0036h	USB0	BRDY Interrupt Enable Register	BRDYENB	16	16	9 PCLKB or more	Rounded up to the nearest integer greater than 1 + 9/(frequency ratio of ICLK/PCLKB)*1		Not present in versions with 112, 100, 64, or 48 pins.
000A 0038h	USB0	NRDY Interrupt Enable Register	NRDYENB	16	16	9 PCLKB or more	Rounded up to the nearest integer greater than 1 + 9/(frequency ratio of ICLK/PCLKB)*1		Not present in versions with 112, 100, 64, or 48 pins.
000A 003Ah	USB0	BEMP Interrupt Enable Register	BEMPENB	16	16	9 PCLKB or more	Rounded up to the nearest integer greater than 1 + 9/(frequency ratio of ICLK/PCLKB)*1		Not present in versions with 112, 100, 64, or 48 pins.
000A 003Ch	USB0	SOF Output Configuration Register	SOFCFG	16	16	9 PCLKB or more	Rounded up to the nearest integer greater than 1 + 9/(frequency ratio of ICLK/PCLKB)*1		Not present in versions with 112, 100, 64, or 48 pins.
000A 0040h	USB0	Interrupt Status Register 0	INTSTS0	16	16	9 PCLKB or more	Rounded up to the nearest integer greater than 1 + 9/(frequency ratio of ICLK/PCLKB)*1		Not present in versions with 112, 100, 64, or 48 pins.
000A 0042h	USB0	Interrupt Status Register 1	INTSTS1	16	16	9 PCLKB or more	Rounded up to the nearest integer greater than 1 + 9/(frequency ratio of ICLK/PCLKB)*1		Not present in versions with 112, 100, 64, or 48 pins.
000A 0046h	USB0	BRDY Interrupt Status Register	BRDYSTS	16	16	9 PCLKB or more	Rounded up to the nearest integer greater than 1 + 9/(frequency ratio of ICLK/PCLKB)*1		Not present in versions with 112, 100, 64, or 48 pins.
000A 0048h	USB0	NRDY Interrupt Status Register	NRDYSTS	16	16	9 PCLKB or more	Rounded up to the nearest integer greater than 1 + 9/(frequency ratio of ICLK/PCLKB)*1		Not present in versions with 112, 100, 64, or 48 pins.
000A 004Ah	USB0	BEMP Interrupt Status Register	BEMPSTS	16	16	9 PCLKB or more	Rounded up to the nearest integer greater than 1 + 9/(frequency ratio of ICLK/PCLKB)*1		Not present in versions with 112, 100, 64, or 48 pins.

Downloaded from Arrow.com.

Table 4.1 List of I/O Registers (Address Order) (31/48)

Address	Module Symbol	Register Name	Register Symbol	Number of Bits	Access Size	Number of Access States		Module Name	Remarks
						ICLK ≥ PCLK	ICLK < PCLK		
000A 004Ch	USB0	Frame Number Register	FRMNUM	16	16	9 PCLKB or more	Rounded up to the nearest integer greater than 1 + 9/(frequency ratio of ICLK/PCLKB)*1	USBa	Not present in versions with 112, 100, 64, or 48 pins.
000A 004Eh	USB0	Device State Change Register	DVCHGR	16	16	9 PCLKB or more	Rounded up to the nearest integer greater than 1 + 9/(frequency ratio of ICLK/PCLKB)*1		Not present in versions with 112, 100, 64, or 48 pins.
000A 0050h	USB0	USB Address Register	USBADDR	16	16	9 PCLKB or more	Rounded up to the nearest integer greater than 1 + 9/(frequency ratio of ICLK/PCLKB)*1		Not present in versions with 112, 100, 64, or 48 pins.
000A 0054h	USB0	USB Request Type Register	USBREQ	16	16	9 PCLKB or more	Rounded up to the nearest integer greater than 1 + 9/(frequency ratio of ICLK/PCLKB)*1		Not present in versions with 112, 100, 64, or 48 pins.
000A 0056h	USB0	USB Request Value Register	USBVAL	16	16	9 PCLKB or more	Rounded up to the nearest integer greater than 1 + 9/(frequency ratio of ICLK/PCLKB)*1		Not present in versions with 112, 100, 64, or 48 pins.
000A 0058h	USB0	USB Request Index Register	USBINDX	16	16	9 PCLKB or more	Rounded up to the nearest integer greater than 1 + 9/(frequency ratio of ICLK/PCLKB)*1		Not present in versions with 112, 100, 64, or 48 pins.
000A 005Ah	USB0	USB Request Length Register	USBLENG	16	16	9 PCLKB or more	Rounded up to the nearest integer greater than 1 + 9/(frequency ratio of ICLK/PCLKB)*1		Not present in versions with 112, 100, 64, or 48 pins.
000A 005Ch	USB0	DCP Configuration Register	DCPCFG	16	16	9 PCLKB or more	Rounded up to the nearest integer greater than 1 + 9/(frequency ratio of ICLK/PCLKB)*1		Not present in versions with 112, 100, 64, or 48 pins.
000A 005Eh	USB0	DCP Maximum Packet Size Register	DCPMAXP	16	16	9 PCLKB or more	Rounded up to the nearest integer greater than 1 + 9/(frequency ratio of ICLK/PCLKB)*1		Not present in versions with 112, 100, 64, or 48 pins.
000A 0060h	USB0	DCP Control Register	DCPCTR	16	16	9 PCLKB or more	Rounded up to the nearest integer greater than 1 + 9/(frequency ratio of ICLK/PCLKB)*1		Not present in versions with 112, 100, 64, or 48 pins.
000A 0064h	USB0	Pipe Window Select Register	PIPESEL	16	16	9 PCLKB or more	Rounded up to the nearest integer greater than 1 + 9/(frequency ratio of ICLK/PCLKB)*1		Not present in versions with 112, 100, 64, or 48 pins.
000A 0068h	USB0	Pipe Configuration Register	PIPECFG	16	16	9 PCLKB or more	Rounded up to the nearest integer greater than 1 + 9/(frequency ratio of ICLK/PCLKB)*1		Not present in versions with 112, 100, 64, or 48 pins.

Downloaded from Arrow.com.

Table 4.1 List of I/O Registers (Address Order) (32/48)

Address	Module Symbol	Register Name	Register Symbol	Number of Bits	Access Size	Number of Access States		Module Name	Remarks
						ICLK ≥ PCLK	ICLK < PCLK		
000A 006Ch	USB0	Pipe Maximum Packet Size Register	PIPEMAXP	16	16	9 PCLKB or more	Rounded up to the nearest integer greater than 1 + 9/(frequency ratio of ICLK/PCLKB)*1	USBa	Not present in versions with 112, 100, 64, or 48 pins.
000A 006Eh	USB0	Pipe Cycle Control Register	PIPEPERI	16	16	9 PCLKB or more	Rounded up to the nearest integer greater than 1 + 9/(frequency ratio of ICLK/PCLKB)*1		Not present in versions with 112, 100, 64, or 48 pins.
000A 0070h	USB0	PIPE1 Control Register	PIPE1CTR	16	16	9 PCLKB or more	Rounded up to the nearest integer greater than 1 + 9/(frequency ratio of ICLK/PCLKB)*1		Not present in versions with 112, 100, 64, or 48 pins.
000A 0072h	USB0	PIPE2 Control Register	PIPE2CTR	16	16	9 PCLKB or more	Rounded up to the nearest integer greater than 1 + 9/(frequency ratio of ICLK/PCLKB)*1		Not present in versions with 112, 100, 64, or 48 pins.
000A 0074h	USB0	PIPE3 Control Register	PIPE3CTR	16	16	9 PCLKB or more	Rounded up to the nearest integer greater than 1 + 9/(frequency ratio of ICLK/PCLKB)*1		Not present in versions with 112, 100, 64, or 48 pins.
000A 0076h	USB0	PIPE4 Control Register	PIPE4CTR	16	16	9 PCLKB or more	Rounded up to the nearest integer greater than 1 + 9/(frequency ratio of ICLK/PCLKB)*1		Not present in versions with 112, 100, 64, or 48 pins.
000A 0078h	USB0	PIPE5 Control Register	PIPE5CTR	16	16	9 PCLKB or more	Rounded up to the nearest integer greater than 1 + 9/(frequency ratio of ICLK/PCLKB)*1		Not present in versions with 112, 100, 64, or 48 pins.
000A 007Ah	USB0	PIPE6 Control Register	PIPE6CTR	16	16	9 PCLKB or more	Rounded up to the nearest integer greater than 1 + 9/(frequency ratio of ICLK/PCLKB)*1		Not present in versions with 112, 100, 64, or 48 pins.
000A 007Ch	USB0	PIPE7 Control Register	PIPE7CTR	16	16	9 PCLKB or more	Rounded up to the nearest integer greater than 1 + 9/(frequency ratio of ICLK/PCLKB)*1		Not present in versions with 112, 100, 64, or 48 pins.
000A 007Eh	USB0	PIPE8 Control Register	PIPE8CTR	16	16	9 PCLKB or more	Rounded up to the nearest integer greater than 1 + 9/(frequency ratio of ICLK/PCLKB)*1		Not present in versions with 112, 100, 64, or 48 pins.
000A 0080h	USB0	PIPE9 Control Register	PIPE9CTR	16	16	9 PCLKB or more	Rounded up to the nearest integer greater than 1 + 9/(frequency ratio of ICLK/PCLKB)*1		Not present in versions with 112, 100, 64, or 48 pins.
000A 0090h	USB0	PIPE1 Transaction Counter Enable Register	PIPE1TRE	16	16	9 PCLKB or more	Rounded up to the nearest integer greater than 1 + 9/(frequency ratio of ICLK/PCLKB)*1		Not present in versions with 112, 100, 64, or 48 pins.

Downloaded from Arrow.com.

Table 4.1 List of I/O Registers (Address Order) (33/48)

Address	Module Symbol	Register Name	Register Symbol	Number of Bits	Access Size	Number of Access States		Module Name	Remarks
						ICLK ≥ PCLK	ICLK < PCLK		
000A 0092h	USB0	PIPE1 Transaction Counter Register	PIPE1TRN	16	16	9 PCLKB or more	Rounded up to the nearest integer greater than 1 + 9/(frequency ratio of ICLK/PCLKB)*1	USBa	Not present in versions with 112, 100, 64, or 48 pins.
000A 0094h	USB0	PIPE2 Transaction Counter Enable Register	PIPE2TRE	16	16	9 PCLKB or more	Rounded up to the nearest integer greater than 1 + 9/(frequency ratio of ICLK/PCLKB)*1		Not present in versions with 112, 100, 64, or 48 pins.
000A 0096h	USB0	PIPE2 Transaction Counter Register	PIPE2TRN	16	16	9 PCLKB or more	Rounded up to the nearest integer greater than 1 + 9/(frequency ratio of ICLK/PCLKB)*1		Not present in versions with 112, 100, 64, or 48 pins.
000A 0098h	USB0	PIPE3 Transaction Counter Enable Register	PIPE3TRE	16	16	9 PCLKB or more	Rounded up to the nearest integer greater than 1 + 9/(frequency ratio of ICLK/PCLKB)*1		Not present in versions with 112, 100, 64, or 48 pins.
000A 009Ah	USB0	PIPE3 Transaction Counter Register	PIPE3TRN	16	16	9 PCLKB or more	Rounded up to the nearest integer greater than 1 + 9/(frequency ratio of ICLK/PCLKB)*1		Not present in versions with 112, 100, 64, or 48 pins.
000A 009Ch	USB0	PIPE4 Transaction Counter Enable Register	PIPE4TRE	16	16	9 PCLKB or more	Rounded up to the nearest integer greater than 1 + 9/(frequency ratio of ICLK/PCLKB)*1		Not present in versions with 112, 100, 64, or 48 pins.
000A 009Eh	USB0	PIPE4 Transaction Counter Register	PIPE4TRN	16	16	9 PCLKB or more	Rounded up to the nearest integer greater than 1 + 9/(frequency ratio of ICLK/PCLKB)*1		Not present in versions with 112, 100, 64, or 48 pins.
000A 00A0h	USB0	PIPE5 Transaction Counter Enable Register	PIPE5TRE	16	16	9 PCLKB or more	Rounded up to the nearest integer greater than 1 + 9/(frequency ratio of ICLK/PCLKB)*1		Not present in versions with 112, 100, 64, or 48 pins.
000A 00A2h	USB0	PIPE5 Transaction Counter Register	PIPE5TRN	16	16	9 PCLKB or more	Rounded up to the nearest integer greater than 1 + 9/(frequency ratio of ICLK/PCLKB)*1		Not present in versions with 112, 100, 64, or 48 pins.
000C 1200h	MTU3	Timer Control Register	TCR	8	8, 16, 32	4, 5 PCLKA	2, 3 ICLK	MTU3	
000C 1201h	MTU4	Timer Control Register	TCR	8	8	4, 5 PCLKA	2, 3 ICLK		
000C 1202h	MTU3	Timer Mode Register 1	TMDR1	8	8, 16	4, 5 PCLKA	2, 3 ICLK		
000C 1203h	MTU4	Timer Mode Register 1	TMDR1	8	8	4, 5 PCLKA	2, 3 ICLK		
000C 1204h	MTU3	Timer I/O Control Register H	TIORH	8	8, 16, 32	4, 5 PCLKA	2, 3 ICLK		
000C 1205h	MTU3	Timer I/O Control Register L	TIORL	8	8	4, 5 PCLKA	2, 3 ICLK		
000C 1206h	MTU4	Timer I/O Control Register H	TIORH	8	8, 16	4, 5 PCLKA	2, 3 ICLK		
000C 1207h	MTU4	Timer I/O Control Register L	TIORL	8	8	4, 5 PCLKA	2, 3 ICLK		
000C 1208h	MTU3	Timer Interrupt Enable Register	TIER	8	8, 16	4, 5 PCLKA	2, 3 ICLK		
000C 1209h	MTU4	Timer Interrupt Enable Register	TIER	8	8	4, 5 PCLKA	2, 3 ICLK		
000C 120Ah	MTU	Timer Output Master Enable Register A	TOERA	8	8	4, 5 PCLKA	2, 3 ICLK		
000C 120Dh	MTU	Timer Gate Control Register A	TGCRA	8	8	4, 5 PCLKA	2, 3 ICLK		
000C 120Eh	MTU	Timer Output Control Register 1A	TOCR1A	8	8, 16	4, 5 PCLKA	2, 3 ICLK		

Downloaded from Arrow.com.

Table 4.1 List of I/O Registers (Address Order) (34/48)

Address	Module Symbol	Register Name	Register Symbol	Number of Bits	Access Size	Number of Access States		Module Name	Remarks
						ICLK ≥ PCLK	ICLK < PCLK		
000C 120Fh	MTU	Timer Output Control Register 2A	TOCR2A	8	8	4, 5 PCLKA	2, 3 ICLK	MTU3	
000C 1210h	MTU3	Timer Counter	TCNT	16	16, 32	4, 5 PCLKA	2, 3 ICLK		
000C 1212h	MTU4	Timer Counter	TCNT	16	16	4, 5 PCLKA	2, 3 ICLK		
000C 1214h	MTU	Timer Cycle Data Register A	TCDRA	16	16, 32	4, 5 PCLKA	2, 3 ICLK		
000C 1216h	MTU	Timer Dead Time Data Register A	TDDRA	16	16	4, 5 PCLKA	2, 3 ICLK		
000C 1218h	MTU3	Timer General Register A	TGRA	16	16, 32	4, 5 PCLKA	2, 3 ICLK		
000C 121Ah	MTU3	Timer General Register B	TGRB	16	16	4, 5 PCLKA	2, 3 ICLK		
000C 121Ch	MTU4	Timer General Register A	TGRA	16	16, 32	4, 5 PCLKA	2, 3 ICLK		
000C 121Eh	MTU4	Timer General Register B	TGRB	16	16	4, 5 PCLKA	2, 3 ICLK		
000C 1220h	MTU	Timer Subcounter A	TCNTSA	16	16, 32	4, 5 PCLKA	2, 3 ICLK		
000C 1222h	MTU	Timer Cycle Buffer Register A	TCBRA	16	16	4, 5 PCLKA	2, 3 ICLK		
000C 1224h	MTU3	Timer General Register C	TGRC	16	16, 32	4, 5 PCLKA	2, 3 ICLK		
000C 1226h	MTU3	Timer General Register D	TGRD	16	16	4, 5 PCLKA	2, 3 ICLK		
000C 1228h	MTU4	Timer General Register C	TGRC	16	16, 32	4, 5 PCLKA	2, 3 ICLK		
000C 122Ah	MTU4	Timer General Register D	TGRD	16	16	4, 5 PCLKA	2, 3 ICLK		
000C 122Ch	MTU3	Timer Status Register	TSR	8	8, 16	4, 5 PCLKA	2, 3 ICLK		
000C 122Dh	MTU4	Timer Status Register	TSR	8	8	4, 5 PCLKA	2, 3 ICLK		
000C 1230h	MTU	Timer Interrupt Skipping Set Register 1A	TITCR1A	8	8, 16	4, 5 PCLKA	2, 3 ICLK		
000C 1231h	MTU	Timer Interrupt Skipping Counters 1A	TITCNT1A	8	8	4, 5 PCLKA	2, 3 ICLK		
000C 1232h	MTU	Timer Buffer Transfer Set Register A	TBTERA	8	8	4, 5 PCLKA	2, 3 ICLK		
000C 1234h	MTU	Timer dead time enable register A	TDERA	8	8	4, 5 PCLKA	2, 3 ICLK		
000C 1236h	MTU	Timer output level buffer register A	TOLBRA	8	8	4, 5 PCLKA	2, 3 ICLK		
000C 1238h	MTU3	Timer Buffer Operation Transfer Mode Register	TBTM	8	8, 16	4, 5 PCLKA	2, 3 ICLK		
000C 1239h	MTU4	Timer Buffer Operation Transfer Mode Register	TBTM	8	8	4, 5 PCLKA	2, 3 ICLK		
000C 123Ah	MTU	Timer Interrupt Skipping Mode Register A	TITMRA	8	8	4, 5 PCLKA	2, 3 ICLK		
000C 123Bh	MTU	Timer Interrupt Skipping Set Register 2A	TITCR2A	8	8	4, 5 PCLKA	2, 3 ICLK		
000C 123Ch	MTU	Timer Interrupt Skipping Counters 2A	TITCNT2A	8	8	4, 5 PCLKA	2, 3 ICLK		
000C 1240h	MTU4	Timer A/D Converter Start Request Control Register	TADCR	16	16	4, 5 PCLKA	2, 3 ICLK		
000C 1244h	MTU4	Timer A/D Converter Start Request Cycle Set Register A	TADCORA	16	16, 32	4, 5 PCLKA	2, 3 ICLK		
000C 1246h	MTU4	Timer A/D Converter Start Request Cycle Set Register B	TADCORB	16	16	4, 5 PCLKA	2, 3 ICLK		
000C 1248h	MTU4	Timer A/D Converter Start Request Cycle Set Buffer Register A	TADCOBRA	16	16, 32	4, 5 PCLKA	2, 3 ICLK		
000C 124Ah	MTU4	Timer A/D Converter Start Request Cycle Set Buffer Register B	TADCOBRB	16	16	4, 5 PCLKA	2, 3 ICLK		
000C 1260h	MTU	Timer Waveform Control Register A	TWCRA	8	8	4, 5 PCLKA	2, 3 ICLK		
000C 1270h	MTU	Timer Mode Register 2A	TMDR2A	8	8	4, 5 PCLKA	2, 3 ICLK		
000C 1272h	MTU3	Timer General Register E	TGRE	16	16	4, 5 PCLKA	2, 3 ICLK		
000C 1274h	MTU4	Timer General Register E	TGRE	16	16	4, 5 PCLKA	2, 3 ICLK		
000C 1276h	MTU4	Timer General Register F	TGRF	16	16	4, 5 PCLKA	2, 3 ICLK		
000C 1280h	MTU	Timer Start Register A	TSTRA	8	8, 16	4, 5 PCLKA	2, 3 ICLK		
000C 1281h	MTU	Timer Synchronous Register A	TSYRA	8	8	4, 5 PCLKA	2, 3 ICLK		
000C 1282h	MTU	Timer Counter Synchronous Start Register	TCSYSTR	8	8	4, 5 PCLKA	2, 3 ICLK		
000C 1284h	MTU	Timer Read/Write Enable Register A	TRWERA	8	8	4, 5 PCLKA	2, 3 ICLK		
000C 1300h	MTU0	Timer Control Register	TCR	8	8, 16, 32	4, 5 PCLKA	2, 3 ICLK		
000C 1301h	MTU0	Timer Mode Register 1	TMDR1	8	8	4, 5 PCLKA	2, 3 ICLK		
000C 1302h	MTU0	Timer I/O Control Register H	TIORH	8	8, 16	4, 5 PCLKA	2, 3 ICLK		
000C 1303h	MTU0	Timer I/O Control Register L	TIORL	8	8	4, 5 PCLKA	2, 3 ICLK		
000C 1304h	MTU0	Timer Interrupt Enable Register	TIER	8	8, 16, 32	4, 5 PCLKA	2, 3 ICLK		
000C 1305h	MTU0	Timer Status Register	TSR	8	8	4, 5 PCLKA	2, 3 ICLK		
000C 1306h	MTU0	Timer Counter	TCNT	16	16	4, 5 PCLKA	2, 3 ICLK		

Downloaded from Arrow.com.

Table 4.1 List of I/O Registers (Address Order) (35/48)

Address	Module Symbol	Register Name	Register Symbol	Number of Bits	Access Size	Number of Access States		Module Name	Remarks
						ICLK ≥ PCLK	ICLK < PCLK		
000C 1308h	MTU0	Timer General Register A	TGRA	16	16, 32	4, 5 PCLKA	2, 3 ICLK	MTU3	
000C 130Ah	MTU0	Timer General Register B	TGRB	16	16	4, 5 PCLKA	2, 3 ICLK		
000C 130Ch	MTU0	Timer General Register C	TGRC	16	16, 32	4, 5 PCLKA	2, 3 ICLK		
000C 130Eh	MTU0	Timer General Register D	TGRD	16	16	4, 5 PCLKA	2, 3 ICLK		
000C 1320h	MTU0	Timer General Register E	TGRE	16	16, 32	4, 5 PCLKA	2, 3 ICLK		
000C 1322h	MTU0	Timer General Register F	TGRF	16	16	4, 5 PCLKA	2, 3 ICLK		
000C 1324h	MTU0	Timer Interrupt Enable Register 2	TIER2	8	8, 16	4, 5 PCLKA	2, 3 ICLK		
000C 1325h	MTU0	Timer Status Register 2	TSR2	8	8	4, 5 PCLKA	2, 3 ICLK		
000C 1326h	MTU0	Timer Buffer Operation Transfer Mode Register	TBTM	8	8	4, 5 PCLKA	2, 3 ICLK		
000C 1380h	MTU1	Timer Control Register	TCR	8	8, 16	4, 5 PCLKA	2, 3 ICLK		
000C 1381h	MTU1	Timer Mode Register 1	TMDR1	8	8	4, 5 PCLKA	2, 3 ICLK		
000C 1382h	MTU1	Timer I/O Control Register	TIOR	8	8	4, 5 PCLKA	2, 3 ICLK		
000C 1384h	MTU1	Timer Interrupt Enable Register	TIER	8	8, 16, 32	4, 5 PCLKA	2, 3 ICLK		
000C 1385h	MTU1	Timer Status Register	TSR	8	8	4, 5 PCLKA	2, 3 ICLK		
000C 1386h	MTU1	Timer Counter	TCNT	16	16	4, 5 PCLKA	2, 3 ICLK		
000C 1388h	MTU1	Timer General Register A	TGRA	16	16, 32	4, 5 PCLKA	2, 3 ICLK		
000C 138Ah	MTU1	Timer General Register B	TGRB	16	16	4, 5 PCLKA	2, 3 ICLK		
000C 1390h	MTU1	Timer Input Capture Control Register	TICCR	8	8	4, 5 PCLKA	2, 3 ICLK		
000C 1400h	MTU2	Timer Control Register	TCR	8	8, 16	4, 5 PCLKA	2, 3 ICLK		
000C 1401h	MTU2	Timer Mode Register 1	TMDR1	8	8	4, 5 PCLKA	2, 3 ICLK		
000C 1402h	MTU2	Timer I/O Control Register	TIOR	8	8	4, 5 PCLKA	2, 3 ICLK		
000C 1404h	MTU2	Timer Interrupt Enable Register	TIER	8	8, 16, 32	4, 5 PCLKA	2, 3 ICLK		
000C 1405h	MTU2	Timer Status Register	TSR	8	8	4, 5 PCLKA	2, 3 ICLK		
000C 1406h	MTU2	Timer Counter	TCNT	16	16	4, 5 PCLKA	2, 3 ICLK		
000C 1408h	MTU2	Timer General Register A	TGRA	16	16, 32	4, 5 PCLKA	2, 3 ICLK		
000C 140Ah	MTU2	Timer General Register B	TGRB	16	16	4, 5 PCLKA	2, 3 ICLK		
000C 1A00h	MTU6	Timer Control Register	TCR	8	8, 16, 32	4, 5 PCLKA	2, 3 ICLK		
000C 1A01h	MTU7	Timer Control Register	TCR	8	8	4, 5 PCLKA	2, 3 ICLK		
000C 1A02h	MTU6	Timer Mode Register 1	TMDR1	8	8, 16	4, 5 PCLKA	2, 3 ICLK		
000C 1A03h	MTU7	Timer Mode Register 1	TMDR1	8	8	4, 5 PCLKA	2, 3 ICLK		
000C 1A04h	MTU6	Timer I/O Control Register H	TIORH	8	8, 16, 32	4, 5 PCLKA	2, 3 ICLK		
000C 1A05h	MTU6	Timer I/O Control Register L	TIORL	8	8	4, 5 PCLKA	2, 3 ICLK		
000C 1A06h	MTU7	Timer I/O Control Register H	TIORH	8	8, 16	4, 5 PCLKA	2, 3 ICLK		
000C 1A07h	MTU7	Timer I/O Control Register L	TIORL	8	8	4, 5 PCLKA	2, 3 ICLK		
000C 1A08h	MTU6	Timer Interrupt Enable Register	TIER	8	8, 16	4, 5 PCLKA	2, 3 ICLK		
000C 1A09h	MTU7	Timer Interrupt Enable Register	TIER	8	8	4, 5 PCLKA	2, 3 ICLK		
000C 1A0Ah	MTU	Timer Output Master Enable Register B	TOERB	8	8	4, 5 PCLKA	2, 3 ICLK		
000C 1A0Eh	MTU	Timer Output Control Register 1B	TOCR1B	8	8, 16	4, 5 PCLKA	2, 3 ICLK		
000C 1A0Fh	MTU	Timer Output Control Register 2B	TOCR2B	8	8	4, 5 PCLKA	2, 3 ICLK		
000C 1A10h	MTU6	Timer Counter	TCNT	16	16, 32	4, 5 PCLKA	2, 3 ICLK		
000C 1A12h	MTU7	Timer Counter	TCNT	16	16	4, 5 PCLKA	2, 3 ICLK		
000C 1A14h	MTU	Timer Cycle Data Register B	TCDRB	16	16, 32	4, 5 PCLKA	2, 3 ICLK		
000C 1A16h	MTU	Timer Dead Time Data Register B	TDDRB	16	16	4, 5 PCLKA	2, 3 ICLK		
000C 1A18h	MTU6	Timer General Register A	TGRA	16	16, 32	4, 5 PCLKA	2, 3 ICLK		
000C 1A1Ah	MTU6	Timer General Register B	TGRB	16	16	4, 5 PCLKA	2, 3 ICLK		
000C 1A1Ch	MTU7	Timer General Register A	TGRA	16	16, 32	4, 5 PCLKA	2, 3 ICLK		
000C 1A1Eh	MTU7	Timer General Register B	TGRB	16	16	4, 5 PCLKA	2, 3 ICLK		
000C 1A20h	MTU	Timer Subcounter B	TCNTSB	16	16, 32	4, 5 PCLKA	2, 3 ICLK		
000C 1A22h	MTU	Timer Cycle Buffer Register B	TCBRB	16	16	4, 5 PCLKA	2, 3 ICLK		
000C 1A24h	MTU6	Timer General Register C	TGRC	16	16, 32	4, 5 PCLKA	2, 3 ICLK		
000C 1A26h	MTU6	Timer General Register D	TGRD	16	16	4, 5 PCLKA	2, 3 ICLK		

Downloaded from Arrow.com.

Table 4.1 List of I/O Registers (Address Order) (36/48)

Address	Module Symbol	Register Name	Register Symbol	Number of Bits	Access Size	Number of Access States		Module Name	Remarks
						ICLK ≥ PCLK	ICLK < PCLK		
000C 1A28h	MTU7	Timer General Register C	TGRC	16	16, 32	4, 5 PCLKA	2, 3 ICLK	MTU3	
000C 1A2Ah	MTU7	Timer General Register D	TGRD	16	16	4, 5 PCLKA	2, 3 ICLK		
000C 1A2Ch	MTU6	Timer Status Register	TSR	8	8, 16	4, 5 PCLKA	2, 3 ICLK		
000C 1A2Dh	MTU7	Timer Status Register	TSR	8	8	4, 5 PCLKA	2, 3 ICLK		
000C 1A30h	MTU	Timer Interrupt Skipping Set Register 1B	TITCR1B	8	8, 16	4, 5 PCLKA	2, 3 ICLK		
000C 1A31h	MTU	Timer Interrupt Skipping Counters 1B	TITCNT1B	8	8	4, 5 PCLKA	2, 3 ICLK		
000C 1A32h	MTU	Timer Buffer Transfer Set Register B	TBTERB	8	8	4, 5 PCLKA	2, 3 ICLK		
000C 1A34h	MTU	Timer Dead Time Enable Register B	TDERB	8	8	4, 5 PCLKA	2, 3 ICLK		
000C 1A36h	MTU	Timer Output Level Buffer Register B	TOLBRB	8	8	4, 5 PCLKA	2, 3 ICLK		
000C 1A38h	MTU6	Timer Buffer Operation Transfer Mode Register	TBTM	8	8, 16	4, 5 PCLKA	2, 3 ICLK		
000C 1A39h	MTU7	Timer Buffer Operation Transfer Mode Register	TBTM	8	8	4, 5 PCLKA	2, 3 ICLK		
000C 1A3Ah	MTU	Timer Interrupt Skipping Mode Register B	TITMRB	8	8	4, 5 PCLKA	2, 3 ICLK		
000C 1A3Bh	MTU	Timer Interrupt Skipping Set Register 2B	TITCR2B	8	8	4, 5 PCLKA	2, 3 ICLK		
000C 1A3Ch	MTU	Timer Interrupt Skipping Counters 2B	TITCNT2B	8	8	4, 5 PCLKA	2, 3 ICLK		
000C 1A40h	MTU7	Timer A/D Converter Start Request Control Register	TADCR	16	16	4, 5 PCLKA	2, 3 ICLK		
000C 1A44h	MTU7	Timer A/D Converter Start Request Cycle Set Register A	TADCORA	16	16, 32	4, 5 PCLKA	2, 3 ICLK		
000C 1A46h	MTU7	Timer A/D Converter Start Request Cycle Set Register B	TADCORB	16	16	4, 5 PCLKA	2, 3 ICLK		
000C 1A48h	MTU7	Timer A/D Converter Start Request Cycle Set Buffer Register A	TADCOBRA	16	16, 32	4, 5 PCLKA	2, 3 ICLK		
000C 1A4Ah	MTU7	Timer A/D Converter Start Request Cycle Set Buffer Register B	TADCOBRB	16	16	4, 5 PCLKA	2, 3 ICLK		
000C 1A50h	MTU	Timer Synchronous Clear Register	TSYCR	8	8	4, 5 PCLKA	2, 3 ICLK		
000C 1A60h	MTU	Timer Waveform Control Register B	TWCRB	8	8	4, 5 PCLKA	2, 3 ICLK		
000C 1A70h	MTU	Timer Mode Register 2B	TMDR2B	8	8	4, 5 PCLKA	2, 3 ICLK		
000C 1A72h	MTU6	Timer General Register E	TGRE	16	16	4, 5 PCLKA	2, 3 ICLK		
000C 1A74h	MTU7	Timer General Register E	TGRE	16	16	4, 5 PCLKA	2, 3 ICLK		
000C 1A76h	MTU7	Timer General Register F	TGRF	16	16	4, 5 PCLKA	2, 3 ICLK		
000C 1A80h	MTU	Timer Start Register B	TSTRB	8	8, 16	4, 5 PCLKA	2, 3 ICLK		
000C 1A81h	MTU	Timer Synchronous Register B	TSYRB	8	8	4, 5 PCLKA	2, 3 ICLK		
000C 1A84h	MTU	Timer Read/Write Enable Register B	TRWERB	8	8	4, 5 PCLKA	2, 3 ICLK		
000C 1C80h	MTU5	Timer Counter U	TCNTU	16	16, 32	4, 5 PCLKA	2, 3 ICLK		
000C 1C82h	MTU5	Timer General Register U	TGRU	16	16	4, 5 PCLKA	2, 3 ICLK		
000C 1C84h	MTU5	Timer Control Register U	TCRU	8	8	4, 5 PCLKA	2, 3 ICLK		
000C 1C86h	MTU5	Timer I/O Control Register U	TIORU	8	8	4, 5 PCLKA	2, 3 ICLK		
000C 1C90h	MTU5	Timer Counter V	TCNTV	16	16, 32	4, 5 PCLKA	2, 3 ICLK		
000C 1C92h	MTU5	Timer General Register V	TGRV	16	16	4, 5 PCLKA	2, 3 ICLK		
000C 1C94h	MTU5	Timer Control Register V	TCRV	8	8	4, 5 PCLKA	2, 3 ICLK		
000C 1C96h	MTU5	Timer I/O Control Register V	TIORV	8	8	4, 5 PCLKA	2, 3 ICLK		
000C 1CA0h	MTU5	Timer Counter W	TCNTW	16	16, 32	4, 5 PCLKA	2, 3 ICLK		
000C 1CA2h	MTU5	Timer General Register W	TGRW	16	16	4, 5 PCLKA	2, 3 ICLK		
000C 1CA4h	MTU5	Timer Control Register W	TCRW	8	8	4, 5 PCLKA	2, 3 ICLK		
000C 1CA6h	MTU5	Timer I/O Control Register W	TIORW	8	8	4, 5 PCLKA	2, 3 ICLK		
000C 1CB0h	MTU5	Timer Status Register	TSR	8	8	4, 5 PCLKA	2, 3 ICLK		
000C 1CB2h	MTU5	Timer Interrupt Enable Register	TIER	8	8	4, 5 PCLKA	2, 3 ICLK		
000C 1CB4h	MTU5	Timer Start Register	TSTR	8	8	4, 5 PCLKA	2, 3 ICLK		
000C 1CB6h	MTU5	Timer Compare Match Clear Register	TCNTCMPCLR	8	8	4, 5 PCLKA	2, 3 ICLK		
000C 2000h	GPT	General PWM Timer Software Start Register	GTSTR	16	8, 16, 32	2 to 5 PCLKA	2, 3 ICLK	GPT	
000C 2004h	GPT	General PWM Timer Hardware Source Start Control Register	GTHSCR	16	8, 16, 32	2 to 5 PCLKA	2, 3 ICLK		

Downloaded from Arrow.com.

Table 4.1 List of I/O Registers (Address Order) (37/48)

Address	Module Symbol	Register Name	Register Symbol	Number of Bits	Access Size	Number of Access States		Module Name	Remarks
						ICLK ≥ PCLK	ICLK < PCLK		
000C 2006h	GPT	General PWM Timer Hardware Source Clear Control Register	GTHCCR	16	8, 16, 32	2 to 5 PCLKA	2, 3 ICLK	GPT	
000C 2008h	GPT	General PWM Timer Hardware Start Source Select Register	GTHSSR	16	8, 16, 32	2 to 5 PCLKA	2, 3 ICLK		
000C 200Ah	GPT	General PWM Timer Hardware Stop/Clear Source Select Register	GTHPSR	16	8, 16, 32	2 to 5 PCLKA	2, 3 ICLK		
000C 200Ch	GPT	General PWM Timer Write-Protection Register	GTWP	16	8, 16, 32	2 to 5 PCLKA	2, 3 ICLK		
000C 200Eh	GPT	General PWM Timer Sync Register	GTSYNC	16	8, 16, 32	2 to 5 PCLKA	2, 3 ICLK		
000C 2010h	GPT	General PWM Timer External Trigger Input Interrupt Register	GTETINT	16	8, 16, 32	2 to 5 PCLKA	2, 3 ICLK		
000C 2014h	GPT	General PWM Timer Buffer Operation Disable Register	GTBDR	16	8, 16, 32	2 to 5 PCLKA	2, 3 ICLK		
000C 2018h	GPT	General PWM Timer Start Write-Protection Register	GTSWP	16	8, 16, 32	2 to 5 PCLKA	2, 3 ICLK		
000C 2080h	GPT	LOCO Count Control Register	LCCR	16	8, 16, 32	2 to 5 PCLKA	2, 3 ICLK		
000C 2082h	GPT	LOCO Count Status Register	LCST	16	8, 16, 32	2 to 5 PCLKA	2, 3 ICLK		
000C 2084h	GPT	LOCO Count Value Register	LCNT	16	8, 16, 32	2 to 5 PCLKA	2, 3 ICLK		
000C 2086h	GPT	LOCO Count Result Average Register	LCNTA	16	8, 16, 32	2 to 5 PCLKA	2, 3 ICLK		
000C 2088h	GPT	LOCO Count Result Register 0	LCNT00	16	8, 16, 32	2 to 5 PCLKA	2, 3 ICLK		
000C 208Ah	GPT	LOCO Count Result Register 1	LCNT01	16	8, 16, 32	2 to 5 PCLKA	2, 3 ICLK		
000C 208Ch	GPT	LOCO Count Result Register 2	LCNT02	16	8, 16, 32	2 to 5 PCLKA	2, 3 ICLK		
000C 208Eh	GPT	LOCO Count Result Register 3	LCNT03	16	8, 16, 32	2 to 5 PCLKA	2, 3 ICLK		
000C 2090h	GPT	LOCO Count Result Register 4	LCNT04	16	8, 16, 32	2 to 5 PCLKA	2, 3 ICLK		
000C 2092h	GPT	LOCO Count Result Register 5	LCNT05	16	8, 16, 32	2 to 5 PCLKA	2, 3 ICLK		
000C 2094h	GPT	LOCO Count Result Register 6	LCNT06	16	8, 16, 32	2 to 5 PCLKA	2, 3 ICLK		
000C 2096h	GPT	LOCO Count Result Register 7	LCNT07	16	8, 16, 32	2 to 5 PCLKA	2, 3 ICLK		
000C 2098h	GPT	LOCO Count Result Register 8	LCNT08	16	8, 16, 32	2 to 5 PCLKA	2, 3 ICLK		
000C 209Ah	GPT	LOCO Count Result Register 9	LCNT09	16	8, 16, 32	2 to 5 PCLKA	2, 3 ICLK		
000C 209Ch	GPT	LOCO Count Result Register 10	LCNT10	16	8, 16, 32	2 to 5 PCLKA	2, 3 ICLK		
000C 209Eh	GPT	LOCO Count Result Register 11	LCNT11	16	8, 16, 32	2 to 5 PCLKA	2, 3 ICLK		
000C 20A0h	GPT	LOCO Count Result Register 12	LCNT12	16	8, 16, 32	2 to 5 PCLKA	2, 3 ICLK		
000C 20A2h	GPT	LOCO Count Result Register 13	LCNT13	16	8, 16, 32	2 to 5 PCLKA	2, 3 ICLK		
000C 20A4h	GPT	LOCO Count Result Register 14	LCNT14	16	8, 16, 32	2 to 5 PCLKA	2, 3 ICLK		
000C 20A6h	GPT	LOCO Count Result Register 15	LCNT15	16	8, 16, 32	2 to 5 PCLKA	2, 3 ICLK		
000C 20A8h	GPT	LOCO Count Upper Permissible Deviation Register	LCNTDU	16	8, 16, 32	2 to 5 PCLKA	2, 3 ICLK		
000C 20AAh	GPT	LOCO Count Lower Permissible Deviation Register	LCNTDL	16	8, 16, 32	2 to 5 PCLKA	2, 3 ICLK		
000C 2100h	GPT0	General PWM Timer I/O Control Register	GTIOR	16	8, 16, 32	2 to 5 PCLKA	2, 3 ICLK		
000C 2102h	GPT0	General PWM Timer Interrupt Output Setting Register	GTINTAD	16	8, 16, 32	2 to 5 PCLKA	2, 3 ICLK		
000C 2104h	GPT0	General PWM Timer Control Register	GTCR	16	8, 16, 32	2 to 5 PCLKA	2, 3 ICLK		
000C 2106h	GPT0	General PWM Timer Buffer Enable Register	GTBER	16	8, 16, 32	2 to 5 PCLKA	2, 3 ICLK		
000C 2108h	GPT0	General PWM Timer Count Direction Register	GTUDC	16	8, 16, 32	2 to 5 PCLKA	2, 3 ICLK		
000C 210Ah	GPT0	General PWM Timer Interrupt, A/D Converter Start Request Skipping Setting Register	GTITC	16	8, 16, 32	2 to 5 PCLKA	2, 3 ICLK		
000C 210Ch	GPT0	General PWM Timer Status Register	GTST	16	8, 16, 32	2 to 5 PCLKA	2, 3 ICLK		
000C 210Eh	GPT0	General PWM Timer Counter	GTCNT	16	16	2 to 5 PCLKA	2, 3 ICLK		
000C 2110h	GPT0	General PWM Timer Compare Capture Register A	GTCCRA	16	16, 32	2 to 5 PCLKA	2, 3 ICLK		
000C 2112h	GPT0	General PWM Timer Compare Capture Register B	GTCCRB	16	16, 32	2 to 5 PCLKA	2, 3 ICLK		
000C 2114h	GPT0	General PWM Timer Compare Capture Register C	GTCCRC	16	16, 32	2 to 5 PCLKA	2, 3 ICLK		
000C 2116h	GPT0	General PWM Timer Compare Capture Register D	GTCCRD	16	16, 32	2 to 5 PCLKA	2, 3 ICLK		
000C 2118h	GPT0	General PWM Timer Compare Capture Register E	GTCCRE	16	16, 32	2 to 5 PCLKA	2, 3 ICLK		

Downloaded from Arrow.com.

Table 4.1 List of I/O Registers (Address Order) (38/48)

Address	Module Symbol	Register Name	Register Symbol	Number of Bits	Access Size	Number of Access States		Module Name	Remarks
						ICLK ≥ PCLK	ICLK < PCLK		
000C 211Ah	GPT0	General PWM Timer Compare Capture Register F	GTCCRF	16	16, 32	2 to 5 PCLKA	2, 3 ICLK	GPT	
000C 211Ch	GPT0	General PWM Timer Cycle Setting Register	GTPR	16	16, 32	2 to 5 PCLKA	2, 3 ICLK		
000C 211Eh	GPT0	General PWM Timer Cycle Setting Buffer Register	GTPBR	16	16, 32	2 to 5 PCLKA	2, 3 ICLK		
000C 2120h	GPT0	General PWM Timer Cycle Setting Double-Buffer Register	GTPDBR	16	16, 32	2 to 5 PCLKA	2, 3 ICLK		
000C 2124h	GPT0	A/D Converter Start Request Timing Register A	GTADTRA	16	16, 32	2 to 5 PCLKA	2, 3 ICLK		
000C 2126h	GPT0	A/D Converter Start Request Timing Buffer Register A	GTADTBRA	16	16, 32	2 to 5 PCLKA	2, 3 ICLK		
000C 2128h	GPT0	A/D Converter Start Request Timing Double-Buffer Register A	GTADTDBRA	16	16, 32	2 to 5 PCLKA	2, 3 ICLK		
000C 212Ch	GPT0	A/D Converter Start Request Timing Register B	GTADTRB	16	16, 32	2 to 5 PCLKA	2, 3 ICLK		
000C 212Eh	GPT0	A/D Converter Start Request Timing Buffer Register B	GTADTBRB	16	16, 32	2 to 5 PCLKA	2, 3 ICLK		
000C 2130h	GPT0	A/D Converter Start Request Timing Double-Buffer Register B	GTADTDBRB	16	16, 32	2 to 5 PCLKA	2, 3 ICLK		
000C 2134h	GPT0	General PWM Timer Output Negate Control Register	GTONCR	16	16, 32	2 to 5 PCLKA	2, 3 ICLK		
000C 2136h	GPT0	General PWM Timer Dead Time Control Register	GTDTCR	16	16, 32	2 to 5 PCLKA	2, 3 ICLK		
000C 2138h	GPT0	General PWM Timer Dead Time Value Register U	GTDVU	16	16, 32	2 to 5 PCLKA	2, 3 ICLK		
000C 213Ah	GPT0	General PWM Timer Dead Time Value Register D	GTDVD	16	16, 32	2 to 5 PCLKA	2, 3 ICLK		
000C 213Ch	GPT0	General PWM Timer Dead Time Buffer Register U	GTDBU	16	16, 32	2 to 5 PCLKA	2, 3 ICLK		
000C 213Eh	GPT0	General PWM Timer Dead Time Buffer Register D	GTDBD	16	16, 32	2 to 5 PCLKA	2, 3 ICLK		
000C 2140h	GPT0	General PWM Timer Output Protection Function Status Register	GTSOS	16	16, 32	2 to 5 PCLKA	2, 3 ICLK		
000C 2142h	GPT0	General PWM Timer Output Protection Function Temporary Release Register	GTSOTR	16	16, 32	2 to 5 PCLKA	2, 3 ICLK		
000C 2180h	GPT1	General PWM Timer I/O Control Register	GTIOR	16	8, 16, 32	2 to 5 PCLKA	2, 3 ICLK		
000C 2182h	GPT1	General PWM Timer Interrupt Output Setting Register	GTINTAD	16	8, 16, 32	2 to 5 PCLKA	2, 3 ICLK		
000C 2184h	GPT1	General PWM Timer Control Register	GTCR	16	8, 16, 32	2 to 5 PCLKA	2, 3 ICLK		
000C 2186h	GPT1	General PWM Timer Buffer Enable Register	GTBER	16	8, 16, 32	2 to 5 PCLKA	2, 3 ICLK		
000C 2188h	GPT1	General PWM Timer Count Direction Register	GTUDC	16	8, 16, 32	2 to 5 PCLKA	2, 3 ICLK		
000C 218Ah	GPT1	General PWM Timer Interrupt, A/D Converter Start Request Skipping Setting Register	GTITC	16	8, 16, 32	2 to 5 PCLKA	2, 3 ICLK		
000C 218Ch	GPT1	General PWM Timer Status Register	GTST	16	8, 16, 32	2 to 5 PCLKA	2, 3 ICLK		
000C 218Eh	GPT1	General PWM Timer Counter	GTCNT	16	16	2 to 5 PCLKA	2, 3 ICLK		
000C 2190h	GPT1	General PWM Timer Compare Capture Register A	GTCCRA	16	16, 32	2 to 5 PCLKA	2, 3 ICLK		
000C 2192h	GPT1	General PWM Timer Compare Capture Register B	GTCCRB	16	16, 32	2 to 5 PCLKA	2, 3 ICLK		
000C 2194h	GPT1	General PWM Timer Compare Capture Register C	GTCCRC	16	16, 32	2 to 5 PCLKA	2, 3 ICLK		
000C 2196h	GPT1	General PWM Timer Compare Capture Register D	GTCCRD	16	16, 32	2 to 5 PCLKA	2, 3 ICLK		
000C 2198h	GPT1	General PWM Timer Compare Capture Register E	GTCCRE	16	16, 32	2 to 5 PCLKA	2, 3 ICLK		
000C 219Ah	GPT1	General PWM Timer Compare Capture Register F	GTCCRF	16	16, 32	2 to 5 PCLKA	2, 3 ICLK		
000C 219Ch	GPT1	General PWM Timer Cycle Setting Register	GTPR	16	16, 32	2 to 5 PCLKA	2, 3 ICLK		
000C 219Eh	GPT1	General PWM Timer Cycle Setting Buffer Register	GTPBR	16	16, 32	2 to 5 PCLKA	2, 3 ICLK		
000C 21A0h	GPT1	General PWM Timer Cycle Setting Double-Buffer Register	GTPDBR	16	16, 32	2 to 5 PCLKA	2, 3 ICLK		
000C 21A4h	GPT1	A/D Converter Start Request Timing Register A	GTADTRA	16	16, 32	2 to 5 PCLKA	2, 3 ICLK		

Downloaded from Arrow.com.

Table 4.1 List of I/O Registers (Address Order) (39/48)

Address	Module Symbol	Register Name	Register Symbol	Number of Bits	Access Size	Number of Access States		Module Name	Remarks
						ICLK ≥ PCLK	ICLK < PCLK		
000C 21A6h	GPT1	A/D Converter Start Request Timing Buffer Register A	GTADTBRA	16	16, 32	2 to 5 PCLKA	2, 3 ICLK	GPT	
000C 21A8h	GPT1	A/D Converter Start Request Timing Double-Buffer Register A	GTADTDBRA	16	16, 32	2 to 5 PCLKA	2, 3 ICLK		
000C 21ACh	GPT1	A/D Converter Start Request Timing Register B	GTADTRB	16	16, 32	2 to 5 PCLKA	2, 3 ICLK		
000C 21AEh	GPT1	A/D Converter Start Request Timing Buffer Register B	GTADTBRB	16	16, 32	2 to 5 PCLKA	2, 3 ICLK		
000C 21B0h	GPT1	A/D Converter Start Request Timing Double-Buffer Register B	GTADTDBRB	16	16, 32	2 to 5 PCLKA	2, 3 ICLK		
000C 21B4h	GPT1	General PWM Timer Output Negate Control Register	GTONCR	16	16, 32	2 to 5 PCLKA	2, 3 ICLK		
000C 21B6h	GPT1	General PWM Timer Dead Time Control Register	GTDTCR	16	16, 32	2 to 5 PCLKA	2, 3 ICLK		
000C 21B8h	GPT1	General PWM Timer Dead Time Value Register U	GTDVU	16	16, 32	2 to 5 PCLKA	2, 3 ICLK		
000C 21BAh	GPT1	General PWM Timer Dead Time Value Register D	GTDVD	16	16, 32	2 to 5 PCLKA	2, 3 ICLK		
000C 21BCh	GPT1	General PWM Timer Dead Time Buffer Register U	GTDBU	16	16, 32	2 to 5 PCLKA	2, 3 ICLK		
000C 21BEh	GPT1	General PWM Timer Dead Time Buffer Register D	GTDBD	16	16, 32	2 to 5 PCLKA	2, 3 ICLK		
000C 21C0h	GPT1	General PWM Timer Output Protection Function Status Register	GTSOS	16	16, 32	2 to 5 PCLKA	2, 3 ICLK		
000C 21C2h	GPT1	General PWM Timer Output Protection Function Temporary Release Register	GTSOTR	16	16, 32	2 to 5 PCLKA	2, 3 ICLK		
000C 2200h	GPT2	General PWM Timer I/O Control Register	GTIOR	16	8, 16, 32	2 to 5 PCLKA	2, 3 ICLK		
000C 2202h	GPT2	General PWM Timer Interrupt Output Setting Register	GTINTAD	16	8, 16, 32	2 to 5 PCLKA	2, 3 ICLK		
000C 2204h	GPT2	General PWM Timer Control Register	GTCR	16	8, 16, 32	2 to 5 PCLKA	2, 3 ICLK		
000C 2206h	GPT2	General PWM Timer Buffer Enable Register	GTBER	16	8, 16, 32	2 to 5 PCLKA	2, 3 ICLK		
000C 2208h	GPT2	General PWM Timer Count Direction Register	GTUDC	16	8, 16, 32	2 to 5 PCLKA	2, 3 ICLK		
000C 220Ah	GPT2	General PWM Timer Interrupt and A/D Converter Start Request Skipping Setting Register	GTITC	16	8, 16, 32	2 to 5 PCLKA	2, 3 ICLK		
000C 220Ch	GPT2	General PWM Timer Status Register	GTST	16	8, 16, 32	2 to 5 PCLKA	2, 3 ICLK		
000C 220Eh	GPT2	General PWM Timer Counter	GTCNT	16	16	2 to 5 PCLKA	2, 3 ICLK		
000C 2210h	GPT2	General PWM Timer Compare Capture Register A	GTCCRA	16	16, 32	2 to 5 PCLKA	2, 3 ICLK		
000C 2212h	GPT2	General PWM Timer Compare Capture Register B	GTCCRB	16	16, 32	2 to 5 PCLKA	2, 3 ICLK		
000C 2214h	GPT2	General PWM Timer Compare Capture Register C	GTCCRC	16	16, 32	2 to 5 PCLKA	2, 3 ICLK		
000C 2216h	GPT2	General PWM Timer Compare Capture Register D	GTCCRD	16	16, 32	2 to 5 PCLKA	2, 3 ICLK		
000C 2218h	GPT2	General PWM Timer Compare Capture Register E	GTCCRE	16	16, 32	2 to 5 PCLKA	2, 3 ICLK		
000C 221Ah	GPT2	General PWM Timer Compare Capture Register F	GTCCRF	16	16, 32	2 to 5 PCLKA	2, 3 ICLK		
000C 221Ch	GPT2	General PWM Timer Cycle Setting Register	GTPR	16	16, 32	2 to 5 PCLKA	2, 3 ICLK		
000C 221Eh	GPT2	General PWM Timer Cycle Setting Buffer Register	GTPBR	16	16, 32	2 to 5 PCLKA	2, 3 ICLK		
000C 2220h	GPT2	General PWM Timer Cycle Setting Double-Buffer Register	GTPDBR	16	16, 32	2 to 5 PCLKA	2, 3 ICLK		
000C 2224h	GPT2	A/D Converter Start Request Timing Register A	GTADTRA	16	16, 32	2 to 5 PCLKA	2, 3 ICLK		
000C 2226h	GPT2	A/D Converter Start Request Timing Buffer Register A	GTADTBRA	16	16, 32	2 to 5 PCLKA	2, 3 ICLK		
000C 2228h	GPT2	A/D Converter Start Request Timing Double-Buffer Register A	GTADTDBRA	16	16, 32	2 to 5 PCLKA	2, 3 ICLK		
000C 222Ch	GPT2	A/D Converter Start Request Timing Register B	GTADTRB	16	16, 32	2 to 5 PCLKA	2, 3 ICLK		
000C 222Eh	GPT2	A/D Converter Start Request Timing Buffer Register B	GTADTBRB	16	16, 32	2 to 5 PCLKA	2, 3 ICLK		

Downloaded from Arrow.com.

Table 4.1 List of I/O Registers (Address Order) (40/48)

Address	Module Symbol	Register Name	Register Symbol	Number of Bits	Access Size	Number of Access States		Module Name	Remarks
						ICLK ≥ PCLK	ICLK < PCLK		
000C 2230h	GPT2	A/D Converter Start Request Timing Double-Buffer Register B	GTADTDBRB	16	16, 32	2 to 5 PCLKA	2, 3 ICLK	GPT	
000C 2234h	GPT2	General PWM Timer Output Negate Control Register	GTONCR	16	16, 32	2 to 5 PCLKA	2, 3 ICLK		
000C 2236h	GPT2	General PWM Timer Dead Time Control Register	GTDTCR	16	16, 32	2 to 5 PCLKA	2, 3 ICLK		
000C 2238h	GPT2	General PWM Timer Dead Time Value Register U	GTDVU	16	16, 32	2 to 5 PCLKA	2, 3 ICLK		
000C 223Ah	GPT2	General PWM Timer Dead Time Value Register D	GTDVD	16	16, 32	2 to 5 PCLKA	2, 3 ICLK		
000C 223Ch	GPT2	General PWM Timer Dead Time Buffer Register U	GTDBU	16	16, 32	2 to 5 PCLKA	2, 3 ICLK		
000C 223Eh	GPT2	General PWM Timer Dead Time Buffer Register D	GTDBD	16	16, 32	2 to 5 PCLKA	2, 3 ICLK		
000C 2240h	GPT2	General PWM Timer Output Protection Function Status Register	GTSOS	16	16, 32	2 to 5 PCLKA	2, 3 ICLK		
000C 2242h	GPT2	General PWM Timer Output Protection Function Temporary Release Register	GTSOTR	16	16, 32	2 to 5 PCLKA	2, 3 ICLK		
000C 2280h	GPT3	General PWM Timer I/O Control Register	GTIOR	16	8, 16, 32	2 to 5 PCLKA	2, 3 ICLK		
000C 2282h	GPT3	General PWM Timer Interrupt Output Setting Register	GTINTAD	16	8, 16, 32	2 to 5 PCLKA	2, 3 ICLK		
000C 2284h	GPT3	General PWM Timer Control Register	GTCR	16	8, 16, 32	2 to 5 PCLKA	2, 3 ICLK		
000C 2286h	GPT3	General PWM Timer Buffer Enable Register	GTBER	16	8, 16, 32	2 to 5 PCLKA	2, 3 ICLK		
000C 2288h	GPT3	General PWM Timer Count Direction Register	GTUDC	16	8, 16, 32	2 to 5 PCLKA	2, 3 ICLK		
000C 228Ah	GPT3	General PWM Timer Interrupt and A/D Converter Start Request Skipping Setting Register	GTITC	16	8, 16, 32	2 to 5 PCLKA	2, 3 ICLK		
000C 228Ch	GPT3	General PWM Timer Status Register	GTST	16	8, 16, 32	2 to 5 PCLKA	2, 3 ICLK		
000C 228Eh	GPT3	General PWM Timer Counter	GTCNT	16	16	2 to 5 PCLKA	2, 3 ICLK		
000C 2290h	GPT3	General PWM Timer Compare Capture Register A	GTCCRA	16	16, 32	2 to 5 PCLKA	2, 3 ICLK		
000C 2292h	GPT3	General PWM Timer Compare Capture Register B	GTCCRB	16	16, 32	2 to 5 PCLKA	2, 3 ICLK		
000C 2294h	GPT3	General PWM Timer Compare Capture Register C	GTCCRC	16	16, 32	2 to 5 PCLKA	2, 3 ICLK		
000C 2296h	GPT3	General PWM Timer Compare Capture Register D	GTCCRD	16	16, 32	2 to 5 PCLKA	2, 3 ICLK		
000C 2298h	GPT3	General PWM Timer Compare Capture Register E	GTCCRE	16	16, 32	2 to 5 PCLKA	2, 3 ICLK		
000C 229Ah	GPT3	General PWM Timer Compare Capture Register F	GTCCRF	16	16, 32	2 to 5 PCLKA	2, 3 ICLK		
000C 229Ch	GPT3	General PWM Timer Cycle Setting Register	GTPR	16	16, 32	2 to 5 PCLKA	2, 3 ICLK		
000C 229Eh	GPT3	General PWM Timer Cycle Setting Buffer Register	GTPBR	16	16, 32	2 to 5 PCLKA	2, 3 ICLK		
000C 22A0h	GPT3	General PWM Timer Cycle Setting Double-Buffer Register	GTPDBR	16	16, 32	2 to 5 PCLKA	2, 3 ICLK		
000C 22A4h	GPT3	A/D Converter Start Request Timing Register A	GTADTRA	16	16, 32	2 to 5 PCLKA	2, 3 ICLK		
000C 22A6h	GPT3	A/D Converter Start Request Timing Buffer Register A	GTADTBRA	16	16, 32	2 to 5 PCLKA	2, 3 ICLK		
000C 22A8h	GPT3	A/D Converter Start Request Timing Double-Buffer Register A	GTADTDBRA	16	16, 32	2 to 5 PCLKA	2, 3 ICLK		
000C 22ACh	GPT3	A/D Converter Start Request Timing Register B	GTADTRB	16	16, 32	2 to 5 PCLKA	2, 3 ICLK		
000C 22AEh	GPT3	A/D Converter Start Request Timing Buffer Register B	GTADTBRB	16	16, 32	2 to 5 PCLKA	2, 3 ICLK		
000C 22B0h	GPT3	A/D Converter Start Request Timing Double-Buffer Register B	GTADTDBRB	16	16, 32	2 to 5 PCLKA	2, 3 ICLK		
000C 22B4h	GPT3	General PWM Timer Output Negate Control Register	GTONCR	16	16, 32	2 to 5 PCLKA	2, 3 ICLK		
000C 22B6h	GPT3	General PWM Timer Dead Time Control Register	GTDTCR	16	16, 32	2 to 5 PCLKA	2, 3 ICLK		
000C 22B8h	GPT3	General PWM Timer Dead Time Value Register U	GTDVU	16	16, 32	2 to 5 PCLKA	2, 3 ICLK		

Downloaded from Arrow.com.

Table 4.1 List of I/O Registers (Address Order) (41/48)

Address	Module Symbol	Register Name	Register Symbol	Number of Bits	Access Size	Number of Access States		Module Name	Remarks
						ICLK ≥ PCLK	ICLK < PCLK		
000C 22BAh	GPT3	General PWM Timer Dead Time Value Register D	GTDVD	16	16, 32	2 to 5 PCLKA	2, 3 ICLK	GPT	
000C 22BCh	GPT3	General PWM Timer Dead Time Buffer Register U	GTDBU	16	16, 32	2 to 5 PCLKA	2, 3 ICLK		
000C 22BEh	GPT3	General PWM Timer Dead Time Buffer Register D	GTDBD	16	16, 32	2 to 5 PCLKA	2, 3 ICLK		
000C 22C0h	GPT3	General PWM Timer Output Protection Function Status Register	GTSOS	16	16, 32	2 to 5 PCLKA	2, 3 ICLK		
000C 22C2h	GPT3	General PWM Timer Output Protection Function Temporary Release Register	GTSOTR	16	16, 32	2 to 5 PCLKA	2, 3 ICLK		
000C 2318h	GPT0	GTIOCA Rising Output Delay Register	GTDLYRA	16	16, 32	2 to 5 PCLKA	2, 3 ICLK		Not present in versions with 64, or 48 pins.
000C 231Ah	GPT0	GTIOCB Rising Output Delay Register	GTDLYRB	16	16, 32	2 to 5 PCLKA	2, 3 ICLK		Not present in versions with 64, or 48 pins.
000C 231Ch	GPT1	GTIOCA Rising Output Delay Register	GTDLYRA	16	16, 32	2 to 5 PCLKA	2, 3 ICLK		Not present in versions with 64, or 48 pins.
000C 231Eh	GPT1	GTIOCB Rising Output Delay Register	GTDLYRB	16	16, 32	2 to 5 PCLKA	2, 3 ICLK		Not present in versions with 64, or 48 pins.
000C 2320h	GPT2	GTIOCA Rising Output Delay Register	GTDLYRA	16	16, 32	2 to 5 PCLKA	2, 3 ICLK		Not present in versions with 64, or 48 pins.
000C 2322h	GPT2	GTIOCB Rising Output Delay Register	GTDLYRB	16	16, 32	2 to 5 PCLKA	2, 3 ICLK		Not present in versions with 64, or 48 pins.
000C 2324h	GPT3	GTIOCA Rising Output Delay Register	GTDLYRA	16	16, 32	2 to 5 PCLKA	2, 3 ICLK		Not present in versions with 64, or 48 pins.
000C 2326h	GPT3	GTIOCB Rising Output Delay Register	GTDLYRB	16	16, 32	2 to 5 PCLKA	2, 3 ICLK		Not present in versions with 64, or 48 pins.
000C 2328h	GPT0	GTIOCA Falling Output Delay Register	GTDLYFA	16	16, 32	2 to 5 PCLKA	2, 3 ICLK		Not present in versions with 64, or 48 pins.
000C 232Ah	GPT0	GTIOCB Falling Output Delay Register	GTDLYFB	16	16, 32	2 to 5 PCLKA	2, 3 ICLK		Not present in versions with 64, or 48 pins.
000C 232Ch	GPT1	GTIOCA Falling Output Delay Register	GTDLYFA	16	16, 32	2 to 5 PCLKA	2, 3 ICLK		Not present in versions with 64, or 48 pins.
000C 232Eh	GPT1	GTIOCB Falling Output Delay Register	GTDLYFB	16	16, 32	2 to 5 PCLKA	2, 3 ICLK		Not present in versions with 64, or 48 pins.
000C 2330h	GPT2	GTIOCA Falling Output Delay Register	GTDLYFA	16	16, 32	2 to 5 PCLKA	2, 3 ICLK		Not present in versions with 64, or 48 pins.
000C 2332h	GPT2	GTIOCB Falling Output Delay Register	GTDLYFB	16	16, 32	2 to 5 PCLKA	2, 3 ICLK		Not present in versions with 64, or 48 pins.
000C 2334h	GPT3	GTIOCA Falling Output Delay Register	GTDLYFA	16	16, 32	2 to 5 PCLKA	2, 3 ICLK		Not present in versions with 64, or 48 pins.
000C 2336h	GPT3	GTIOCB Falling Output Delay Register	GTDLYFB	16	16, 32	2 to 5 PCLKA	2, 3 ICLK		Not present in versions with 64, or 48 pins.
000C 2800h	GPTB	General PWM Timer Software Start Register	GTSTR	16	8, 16, 32	2 to 5 PCLKA	2, 3 ICLK		Not present in versions with 64, or 48 pins.
000C 2804h	GPTB	General PWM Timer Hardware Source Start Control Register	GTHSCR	16	8, 16, 32	2 to 5 PCLKA	2, 3 ICLK		Not present in versions with 64, or 48 pins.
000C 2806h	GPTB	General PWM Timer Hardware Source Clear Control Register	GTHCCR	16	8, 16, 32	2 to 5 PCLKA	2, 3 ICLK		Not present in versions with 64, or 48 pins.
000C 2808h	GPTB	General PWM Timer Hardware Start Source Select Register	GTHSSR	16	8, 16, 32	2 to 5 PCLKA	2, 3 ICLK		Not present in versions with 64, or 48 pins.
000C 280Ah	GPTB	General PWM Timer Hardware Stop/Clear Source Select Register	GTHPSR	16	8, 16, 32	2 to 5 PCLKA	2, 3 ICLK		Not present in versions with 64, or 48 pins.
000C 280Ch	GPTB	General PWM Timer Write-Protection Register	GTWP	16	8, 16, 32	2 to 5 PCLKA	2, 3 ICLK		Not present in versions with 64, or 48 pins.
000C 280Eh	GPTB	General PWM Timer Sync Register	GTSYNC	16	8, 16, 32	2 to 5 PCLKA	2, 3 ICLK		Not present in versions with 64, or 48 pins.
000C 2810h	GPTB	General PWM Timer External Trigger Input Interrupt Register	GTETINT	16	8, 16, 32	2 to 5 PCLKA	2, 3 ICLK		Not present in versions with 64, or 48 pins.
000C 2814h	GPTB	General PWM Timer Buffer Operation Disable Register	GTBDR	16	8, 16, 32	2 to 5 PCLKA	2, 3 ICLK		Not present in versions with 64, or 48 pins.
000C 2818h	GPTB	General PWM Timer Start Write-Protection Register	GTSWP	16	8, 16, 32	2 to 5 PCLKA	2, 3 ICLK		Not present in versions with 64, or 48 pins.
000C 2880h	GPTB	LOCO Count Control Register	LCCR	16	8, 16, 32	2 to 5 PCLKA	2, 3 ICLK		Not present in versions with 64, or 48 pins.
000C 2882h	GPTB	LOCO Count Status Register	LCST	16	8, 16, 32	2 to 5 PCLKA	2, 3 ICLK		Not present in versions with 64, or 48 pins.

Downloaded from Arrow.com.

Table 4.1 List of I/O Registers (Address Order) (42/48)

Address	Module Symbol	Register Name	Register Symbol	Number of Bits	Access Size	Number of Access States		Module Name	Remarks
						ICLK ≥ PCLK	ICLK < PCLK		
000C 2884h	GPTB	LOCO Count Value Register	LCNT	16	8, 16, 32	2 to 5 PCLKA	2, 3 ICLK	GPT	Not present in versions with 64, or 48 pins.
000C 2886h	GPTB	LOCO Count Result Average Register	LCNTA	16	8, 16, 32	2 to 5 PCLKA	2, 3 ICLK		Not present in versions with 64, or 48 pins.
000C 2888h	GPTB	LOCO Count Result Register 0	LCNT00	16	8, 16, 32	2 to 5 PCLKA	2, 3 ICLK		Not present in versions with 64, or 48 pins.
000C 288Ah	GPTB	LOCO Count Result Register 1	LCNT01	16	8, 16, 32	2 to 5 PCLKA	2, 3 ICLK		Not present in versions with 64, or 48 pins.
000C 288Ch	GPTB	LOCO Count Result Register 2	LCNT02	16	8, 16, 32	2 to 5 PCLKA	2, 3 ICLK		Not present in versions with 64 or 48 pins.
000C 288Eh	GPTB	LOCO Count Result Register 3	LCNT03	16	8, 16, 32	2 to 5 PCLKA	2, 3 ICLK		Not present in versions with 64 or 48 pins.
000C 2890h	GPTB	LOCO Count Result Register 4	LCNT04	16	8, 16, 32	2 to 5 PCLKA	2, 3 ICLK		Not present in versions with 64 or 48 pins.
000C 2892h	GPTB	LOCO Count Result Register 5	LCNT05	16	8, 16, 32	2 to 5 PCLKA	2, 3 ICLK		Not present in versions with 64 or 48 pins.
000C 2894h	GPTB	LOCO Count Result Register 6	LCNT06	16	8, 16, 32	2 to 5 PCLKA	2, 3 ICLK		Not present in versions with 64 or 48 pins.
000C 2896h	GPTB	LOCO Count Result Register 7	LCNT07	16	8, 16, 32	2 to 5 PCLKA	2, 3 ICLK		Not present in versions with 64 or 48 pins.
000C 2898h	GPTB	LOCO Count Result Register 8	LCNT08	16	8, 16, 32	2 to 5 PCLKA	2, 3 ICLK		Not present in versions with 64 or 48 pins.
000C 289Ah	GPTB	LOCO Count Result Register 9	LCNT09	16	8, 16, 32	2 to 5 PCLKA	2, 3 ICLK		Not present in versions with 64 or 48 pins.
000C 289Ch	GPTB	LOCO Count Result Register 10	LCNT10	16	8, 16, 32	2 to 5 PCLKA	2, 3 ICLK		Not present in versions with 64 or 48 pins.
000C 289Eh	GPTB	LOCO Count Result Register 11	LCNT11	16	8, 16, 32	2 to 5 PCLKA	2, 3 ICLK		Not present in versions with 64 or 48 pins.
000C 28A0h	GPTB	LOCO Count Result Register 12	LCNT12	16	8, 16, 32	2 to 5 PCLKA	2, 3 ICLK		Not present in versions with 64 or 48 pins.
000C 28A2h	GPTB	LOCO Count Result Register 13	LCNT13	16	8, 16, 32	2 to 5 PCLKA	2, 3 ICLK		Not present in versions with 64 or 48 pins.
000C 28A4h	GPTB	LOCO Count Result Register 14	LCNT14	16	8, 16, 32	2 to 5 PCLKA	2, 3 ICLK		Not present in versions with 64 or 48 pins.
000C 28A6h	GPTB	LOCO Count Result Register 15	LCNT15	16	8, 16, 32	2 to 5 PCLKA	2, 3 ICLK		Not present in versions with 64 or 48 pins.
000C 28A8h	GPTB	LOCO Count Upper Permissible Deviation Register	LCNTDU	16	8, 16, 32	2 to 5 PCLKA	2, 3 ICLK		Not present in versions with 64 or 48 pins.
000C 28AAh	GPTB	LOCO Count Lower Permissible Deviation Register	LCNTDL	16	8, 16, 32	2 to 5 PCLKA	2, 3 ICLK		Not present in versions with 64 or 48 pins.
000C 2900h	GPT4	General PWM Timer I/O Control Register	GTIOR	16	8, 16, 32	2 to 5 PCLKA	2, 3 ICLK		Not present in versions with 64 or 48 pins.
000C 2902h	GPT4	General PWM Timer Interrupt Output Setting Register	GTINTAD	16	8, 16, 32	2 to 5 PCLKA	2, 3 ICLK		Not present in versions with 64 or 48 pins.
000C 2904h	GPT4	General PWM Timer Control Register	GTCR	16	8, 16, 32	2 to 5 PCLKA	2, 3 ICLK		Not present in versions with 64 or 48 pins.
000C 2906h	GPT4	General PWM Timer Buffer Enable Register	GTBER	16	8, 16, 32	2 to 5 PCLKA	2, 3 ICLK		Not present in versions with 64 or 48 pins.
000C 2908h	GPT4	General PWM Timer Count Direction Register	GTUDC	16	8, 16, 32	2 to 5 PCLKA	2, 3 ICLK		Not present in versions with 64 or 48 pins.
000C 290Ah	GPT4	General PWM Timer Interrupt and A/D Converter Start Request Skipping Setting Register	GTITC	16	8, 16, 32	2 to 5 PCLKA	2, 3 ICLK		Not present in versions with 64 or 48 pins.
000C 290Ch	GPT4	General PWM Timer Status Register	GTST	16	8, 16, 32	2 to 5 PCLKA	2, 3 ICLK		Not present in versions with 64 or 48 pins.
000C 290Eh	GPT4	General PWM Timer Counter	GTCNT	16	16	2 to 5 PCLKA	2, 3 ICLK		Not present in versions with 64 or 48 pins.
000C 2910h	GPT4	General PWM Timer Compare Capture Register A	GTCCRA	16	16, 32	2 to 5 PCLKA	2, 3 ICLK		Not present in versions with 64 or 48 pins.
000C 2912h	GPT4	General PWM Timer Compare Capture Register B	GTCCRB	16	16, 32	2 to 5 PCLKA	2, 3 ICLK		Not present in versions with 64 or 48 pins.
000C 2914h	GPT4	General PWM Timer Compare Capture Register C	GTCCRC	16	16, 32	2 to 5 PCLKA	2, 3 ICLK		Not present in versions with 64 or 48 pins.
000C 2916h	GPT4	General PWM Timer Compare Capture Register D	GTCCRD	16	16, 32	2 to 5 PCLKA	2, 3 ICLK		Not present in versions with 64 or 48 pins.
000C 2918h	GPT4	General PWM Timer Compare Capture Register E	GTCCRE	16	16, 32	2 to 5 PCLKA	2, 3 ICLK		Not present in versions with 64 or 48 pins.

Downloaded from Arrow.com.

Table 4.1 List of I/O Registers (Address Order) (43/48)

Address	Module Symbol	Register Name	Register Symbol	Number of Bits	Access Size	Number of Access States		Module Name	Remarks
						ICLK ≥ PCLK	ICLK < PCLK		
000C 291Ah	GPT4	General PWM Timer Compare Capture Register F	GTCCRF	16	16, 32	2 to 5 PCLKA	2, 3 ICLK	GPT	Not present in versions with 64 or 48 pins.
000C 291Ch	GPT4	General PWM Timer Cycle Setting Register	GTPR	16	16, 32	2 to 5 PCLKA	2, 3 ICLK		Not present in versions with 64 or 48 pins.
000C 291Eh	GPT4	General PWM Timer Cycle Setting Buffer Register	GTPBR	16	16, 32	2 to 5 PCLKA	2, 3 ICLK		Not present in versions with 64 or 48 pins.
000C 2920h	GPT4	General PWM Timer Cycle Setting Double-Buffer Register	GTPDBR	16	16, 32	2 to 5 PCLKA	2, 3 ICLK		Not present in versions with 64 or 48 pins.
000C 2924h	GPT4	A/D Converter Start Request Timing Register A	GTADTRA	16	16, 32	2 to 5 PCLKA	2, 3 ICLK		Not present in versions with 64 or 48 pins.
000C 2926h	GPT4	A/D Converter Start Request Timing Buffer Register A	GTADTBRA	16	16, 32	2 to 5 PCLKA	2, 3 ICLK		Not present in versions with 64 or 48 pins.
000C 2928h	GPT4	A/D Converter Start Request Timing Double-Buffer Register A	GTADTDBRA	16	16, 32	2 to 5 PCLKA	2, 3 ICLK		Not present in versions with 64 or 48 pins.
000C 292Ch	GPT4	A/D Converter Start Request Timing Register B	GTADTRB	16	16, 32	2 to 5 PCLKA	2, 3 ICLK		Not present in versions with 64 or 48 pins.
000C 292Eh	GPT4	A/D Converter Start Request Timing Buffer Register B	GTADTBRB	16	16, 32	2 to 5 PCLKA	2, 3 ICLK		Not present in versions with 64 or 48 pins.
000C 2930h	GPT4	A/D Converter Start Request Timing Double-Buffer Register B	GTADTDBRB	16	16, 32	2 to 5 PCLKA	2, 3 ICLK		Not present in versions with 64 or 48 pins.
000C 2934h	GPT4	General PWM Timer Output Negate Control Register	GTONCR	16	16, 32	2 to 5 PCLKA	2, 3 ICLK		Not present in versions with 64 or 48 pins.
000C 2936h	GPT4	General PWM Timer Dead Time Control Register	GTDTCR	16	16, 32	2 to 5 PCLKA	2, 3 ICLK		Not present in versions with 64 or 48 pins.
000C 2938h	GPT4	General PWM Timer Dead Time Value Register U	GTDVU	16	16, 32	2 to 5 PCLKA	2, 3 ICLK		Not present in versions with 64 or 48 pins.
000C 293Ah	GPT4	General PWM Timer Dead Time Value Register D	GTDVD	16	16, 32	2 to 5 PCLKA	2, 3 ICLK		Not present in versions with 64 or 48 pins.
000C 293Ch	GPT4	General PWM Timer Dead Time Buffer Register U	GTDBU	16	16, 32	2 to 5 PCLKA	2, 3 ICLK		Not present in versions with 64 or 48 pins.
000C 293Eh	GPT4	General PWM Timer Dead Time Buffer Register D	GTDBD	16	16, 32	2 to 5 PCLKA	2, 3 ICLK		Not present in versions with 64 or 48 pins.
000C 2940h	GPT4	General PWM Timer Output Protection Function Status Register	GTSOS	16	16, 32	2 to 5 PCLKA	2, 3 ICLK		Not present in versions with 64 or 48 pins.
000C 2942h	GPT4	General PWM Timer Output Protection Function Temporary Release Register	GTSOTR	16	16, 32	2 to 5 PCLKA	2, 3 ICLK		Not present in versions with 64 or 48 pins.
000C 2980h	GPT5	General PWM Timer I/O Control Register	GTIOR	16	8, 16, 32	2 to 5 PCLKA	2, 3 ICLK		Not present in versions with 64 or 48 pins.
000C 2982h	GPT5	General PWM Timer Interrupt Output Setting Register	GTINTAD	16	8, 16, 32	2 to 5 PCLKA	2, 3 ICLK		Not present in versions with 64 or 48 pins.
000C 2984h	GPT5	General PWM Timer Control Register	GTCR	16	8, 16, 32	2 to 5 PCLKA	2, 3 ICLK		Not present in versions with 64 or 48 pins.
000C 2986h	GPT5	General PWM Timer Buffer Enable Register	GTBER	16	8, 16, 32	2 to 5 PCLKA	2, 3 ICLK		Not present in versions with 64 or 48 pins.
000C 2988h	GPT5	General PWM Timer Count Direction Register	GTUDC	16	8, 16, 32	2 to 5 PCLKA	2, 3 ICLK		Not present in versions with 64 or 48 pins.
000C 298Ah	GPT5	General PWM Timer Interrupt and A/D Converter Start Request Skipping Setting Register	GTITC	16	8, 16, 32	2 to 5 PCLKA	2, 3 ICLK		Not present in versions with 64 or 48 pins.
000C 298Ch	GPT5	General PWM Timer Status Register	GTST	16	8, 16, 32	2 to 5 PCLKA	2, 3 ICLK		Not present in versions with 64 or 48 pins.
000C 298Eh	GPT5	General PWM Timer Counter	GTCNT	16	16	2 to 5 PCLKA	2, 3 ICLK		Not present in versions with 64 or 48 pins.
000C 2990h	GPT5	General PWM Timer Compare Capture Register A	GTCCRA	16	16, 32	2 to 5 PCLKA	2, 3 ICLK		Not present in versions with 64 or 48 pins.
000C 2992h	GPT5	General PWM Timer Compare Capture Register B	GTCCRB	16	16, 32	2 to 5 PCLKA	2, 3 ICLK		Not present in versions with 64 or 48 pins.
000C 2994h	GPT5	General PWM Timer Compare Capture Register C	GTCCRC	16	16, 32	2 to 5 PCLKA	2, 3 ICLK		Not present in versions with 64 or 48 pins.
000C 2996h	GPT5	General PWM Timer Compare Capture Register D	GTCCRD	16	16, 32	2 to 5 PCLKA	2, 3 ICLK		Not present in versions with 64 or 48 pins.
000C 2998h	GPT5	General PWM Timer Compare Capture Register E	GTCCRE	16	16, 32	2 to 5 PCLKA	2, 3 ICLK		Not present in versions with 64 or 48 pins.
000C 299Ah	GPT5	General PWM Timer Compare Capture Register F	GTCCRF	16	16, 32	2 to 5 PCLKA	2, 3 ICLK		Not present in versions with 64 or 48 pins.
000C 299Ch	GPT5	General PWM Timer Cycle Setting Register	GTPR	16	16, 32	2 to 5 PCLKA	2, 3 ICLK		Not present in versions with 64 or 48 pins.

Downloaded from Arrow.com.

Table 4.1 List of I/O Registers (Address Order) (44/48)

Address	Module Symbol	Register Name	Register Symbol	Number of Bits	Access Size	Number of Access States		Module Name	Remarks
						ICLK ≥ PCLK	ICLK < PCLK		
000C 299Eh	GPT5	General PWM Timer Cycle Setting Buffer Register	GTPBR	16	16, 32	2 to 5 PCLKA	2, 3 ICLK	GPT	Not present in versions with 64 or 48 pins.
000C 29A0h	GPT5	General PWM Timer Cycle Setting Double-Buffer Register	GTPDBR	16	16, 32	2 to 5 PCLKA	2, 3 ICLK		Not present in versions with 64 or 48 pins.
000C 29A4h	GPT5	A/D Converter Start Request Timing Register A	GTADTRA	16	16, 32	2 to 5 PCLKA	2, 3 ICLK		Not present in versions with 64 or 48 pins.
000C 29A6h	GPT5	A/D Converter Start Request Timing Buffer Register A	GTADTBRA	16	16, 32	2 to 5 PCLKA	2, 3 ICLK		Not present in versions with 64 or 48 pins.
000C 29A8h	GPT5	A/D Converter Start Request Timing Double-Buffer Register A	GTADTDBRA	16	16, 32	2 to 5 PCLKA	2, 3 ICLK		Not present in versions with 64 or 48 pins.
000C 29ACh	GPT5	A/D Converter Start Request Timing Register B	GTADTRB	16	16, 32	2 to 5 PCLKA	2, 3 ICLK		Not present in versions with 64 or 48 pins.
000C 29AEh	GPT5	A/D Converter Start Request Timing Buffer Register B	GTADTBRB	16	16, 32	2 to 5 PCLKA	2, 3 ICLK		Not present in versions with 64 or 48 pins.
000C 29B0h	GPT5	A/D Converter Start Request Timing Double-Buffer Register B	GTADTDBRB	16	16, 32	2 to 5 PCLKA	2, 3 ICLK		Not present in versions with 64 or 48 pins.
000C 29B4h	GPT5	General PWM Timer Output Negate Control Register	GTONCR	16	16, 32	2 to 5 PCLKA	2, 3 ICLK		Not present in versions with 64 or 48 pins.
000C 29B6h	GPT5	General PWM Timer Dead Time Control Register	GTDTCR	16	16, 32	2 to 5 PCLKA	2, 3 ICLK		Not present in versions with 64 or 48 pins.
000C 29B8h	GPT5	General PWM Timer Dead Time Value Register U	GTDVU	16	16, 32	2 to 5 PCLKA	2, 3 ICLK		Not present in versions with 64 or 48 pins.
000C 29BAh	GPT5	General PWM Timer Dead Time Value Register D	GTDVD	16	16, 32	2 to 5 PCLKA	2, 3 ICLK		Not present in versions with 64 or 48 pins.
000C 29BCh	GPT5	General PWM Timer Dead Time Buffer Register U	GTDBU	16	16, 32	2 to 5 PCLKA	2, 3 ICLK		Not present in versions with 64 or 48 pins.
000C 29BEh	GPT5	General PWM Timer Dead Time Buffer Register D	GTDBD	16	16, 32	2 to 5 PCLKA	2, 3 ICLK		Not present in versions with 64 or 48 pins.
000C 29C0h	GPT5	General PWM Timer Output Protection Function Status Register	GTSOS	16	16, 32	2 to 5 PCLKA	2, 3 ICLK		Not present in versions with 64 or 48 pins.
000C 29C2h	GPT5	General PWM Timer Output Protection Function Temporary Release Register	GTSOTR	16	16, 32	2 to 5 PCLKA	2, 3 ICLK		Not present in versions with 64 or 48 pins.
000C 2A00h	GPT6	General PWM Timer I/O Control Register	GTIOR	16	8, 16, 32	2 to 5 PCLKA	2, 3 ICLK		Not present in versions with 64 or 48 pins.
000C 2A02h	GPT6	General PWM Timer Interrupt Output Setting Register	GTINTAD	16	8, 16, 32	2 to 5 PCLKA	2, 3 ICLK		Not present in versions with 64 or 48 pins.
000C 2A04h	GPT6	General PWM Timer Control Register	GTCR	16	8, 16, 32	2 to 5 PCLKA	2, 3 ICLK		Not present in versions with 64 or 48 pins.
000C 2A06h	GPT6	General PWM Timer Buffer Enable Register	GTBER	16	8, 16, 32	2 to 5 PCLKA	2, 3 ICLK		Not present in versions with 64 or 48 pins.
000C 2A08h	GPT6	General PWM Timer Count Direction Register	GTUDC	16	8, 16, 32	2 to 5 PCLKA	2, 3 ICLK		Not present in versions with 64 or 48 pins.
000C 2A0Ah	GPT6	General PWM Timer Interrupt, A/D Converter Start Request Skipping Setting Register	GTITC	16	8, 16, 32	2 to 5 PCLKA	2, 3 ICLK		Not present in versions with 64 or 48 pins.
000C 2A0Ch	GPT6	General PWM Timer Status Register	GTST	16	8, 16, 32	2 to 5 PCLKA	2, 3 ICLK		Not present in versions with 64 or 48 pins.
000C 2A0Eh	GPT6	General PWM Timer Counter	GTCNT	16	16	2 to 5 PCLKA	2, 3 ICLK		Not present in versions with 64 or 48 pins.
000C 2A10h	GPT6	General PWM Timer Compare Capture Register A	GTCCRA	16	16, 32	2 to 5 PCLKA	2, 3 ICLK		Not present in versions with 64 or 48 pins.
000C 2A12h	GPT6	General PWM Timer Compare Capture Register B	GTCCRB	16	16, 32	2 to 5 PCLKA	2, 3 ICLK		Not present in versions with 64 or 48 pins.
000C 2A14h	GPT6	General PWM Timer Compare Capture Register C	GTCCRC	16	16, 32	2 to 5 PCLKA	2, 3 ICLK		Not present in versions with 64 or 48 pins.
000C 2A16h	GPT6	General PWM Timer Compare Capture Register D	GTCCRD	16	16, 32	2 to 5 PCLKA	2, 3 ICLK		Not present in versions with 64 or 48 pins.
000C 2A18h	GPT6	General PWM Timer Compare Capture Register E	GTCCRE	16	16, 32	2 to 5 PCLKA	2, 3 ICLK		Not present in versions with 64 or 48 pins.
000C 2A1Ah	GPT6	General PWM Timer Compare Capture Register F	GTCCRF	16	16, 32	2 to 5 PCLKA	2, 3 ICLK		Not present in versions with 64 or 48 pins.
000C 2A1Ch	GPT6	General PWM Timer Cycle Setting Register	GTPR	16	16, 32	2 to 5 PCLKA	2, 3 ICLK		Not present in versions with 64 or 48 pins.
000C 2A1Eh	GPT6	General PWM Timer Cycle Setting Buffer Register	GTPBR	16	16, 32	2 to 5 PCLKA	2, 3 ICLK		Not present in versions with 64 or 48 pins.
000C 2A20h	GPT6	General PWM Timer Cycle Setting Double-Buffer Register	GTPDBR	16	16, 32	2 to 5 PCLKA	2, 3 ICLK		Not present in versions with 64 or 48 pins.

Downloaded from Arrow.com.

Table 4.1 List of I/O Registers (Address Order) (45/48)

Address	Module Symbol	Register Name	Register Symbol	Number of Bits	Access Size	Number of Access States		Module Name	Remarks
						ICLK ≥ PCLK	ICLK < PCLK		
000C 2A24h	GPT6	A/D Converter Start Request Timing Register A	GTADTRA	16	16, 32	2 to 5 PCLKA	2, 3 ICLK	GPT	Not present in versions with 64 or 48 pins.
000C 2A26h	GPT6	A/D Converter Start Request Timing Buffer Register A	GTADTBRA	16	16, 32	2 to 5 PCLKA	2, 3 ICLK		Not present in versions with 64 or 48 pins.
000C 2A28h	GPT6	A/D Converter Start Request Timing Double-Buffer Register A	GTADTDBRA	16	16, 32	2 to 5 PCLKA	2, 3 ICLK		Not present in versions with 64 or 48 pins.
000C 2A2Ch	GPT6	A/D Converter Start Request Timing Register B	GTADTRB	16	16, 32	2 to 5 PCLKA	2, 3 ICLK		Not present in versions with 64 or 48 pins.
000C 2A2Eh	GPT6	A/D Converter Start Request Timing Buffer Register B	GTADTBRB	16	16, 32	2 to 5 PCLKA	2, 3 ICLK		Not present in versions with 64 or 48 pins.
000C 2A30h	GPT6	A/D Converter Start Request Timing Double-Buffer Register B	GTADTDBRB	16	16, 32	2 to 5 PCLKA	2, 3 ICLK		Not present in versions with 64 or 48 pins.
000C 2A34h	GPT6	General PWM Timer Output Negate Control Register	GTONCR	16	16, 32	2 to 5 PCLKA	2, 3 ICLK		Not present in versions with 64 or 48 pins.
000C 2A36h	GPT6	General PWM Timer Dead Time Control Register	GTDTCR	16	16, 32	2 to 5 PCLKA	2, 3 ICLK		Not present in versions with 64 or 48 pins.
000C 2A38h	GPT6	General PWM Timer Dead Time Value Register U	GTDVU	16	16, 32	2 to 5 PCLKA	2, 3 ICLK		Not present in versions with 64 or 48 pins.
000C 2A3Ah	GPT6	General PWM Timer Dead Time Value Register D	GTDVD	16	16, 32	2 to 5 PCLKA	2, 3 ICLK		Not present in versions with 64 or 48 pins.
000C 2A3Ch	GPT6	General PWM Timer Dead Time Buffer Register U	GTDBU	16	16, 32	2 to 5 PCLKA	2, 3 ICLK		Not present in versions with 64 or 48 pins.
000C 2A3Eh	GPT6	General PWM Timer Dead Time Buffer Register D	GTDBD	16	16, 32	2 to 5 PCLKA	2, 3 ICLK		Not present in versions with 64 or 48 pins.
000C 2A40h	GPT6	General PWM Timer Output Protection Function Status Register	GTSOS	16	16, 32	2 to 5 PCLKA	2, 3 ICLK		Not present in versions with 64 or 48 pins.
000C 2A42h	GPT6	General PWM Timer Output Protection Function Temporary Release Register	GTSOTR	16	16, 32	2 to 5 PCLKA	2, 3 ICLK		Not present in versions with 64 or 48 pins.
000C 2A80h	GPT7	General PWM Timer I/O Control Register	GTIOR	16	8, 16, 32	2 to 5 PCLKA	2, 3 ICLK		Not present in versions with 64 or 48 pins.
000C 2A82h	GPT7	General PWM Timer Interrupt Output Setting Register	GTINTAD	16	8, 16, 32	2 to 5 PCLKA	2, 3 ICLK		Not present in versions with 64 or 48 pins.
000C 2A84h	GPT7	General PWM Timer Control Register	GTCR	16	8, 16, 32	2 to 5 PCLKA	2, 3 ICLK		Not present in versions with 64 or 48 pins.
000C 2A86h	GPT7	General PWM Timer Buffer Enable Register	GTBER	16	8, 16, 32	2 to 5 PCLKA	2, 3 ICLK		Not present in versions with 64 or 48 pins.
000C 2A88h	GPT7	General PWM Timer Count Direction Register	GTUDC	16	8, 16, 32	2 to 5 PCLKA	2, 3 ICLK		Not present in versions with 64 or 48 pins.
000C 2A8Ah	GPT7	General PWM Timer Interrupt and A/D Converter Start Request Skipping Setting Register	GTITC	16	8, 16, 32	2 to 5 PCLKA	2, 3 ICLK		Not present in versions with 64 or 48 pins.
000C 2A8Ch	GPT7	General PWM Timer Status Register	GTST	16	8, 16, 32	2 to 5 PCLKA	2, 3 ICLK		Not present in versions with 64 or 48 pins.
000C 2A8Eh	GPT7	General PWM Timer Counter	GTCNT	16	16	2 to 5 PCLKA	2, 3 ICLK		Not present in versions with 64 or 48 pins.
000C 2A90h	GPT7	General PWM Timer Compare Capture Register A	GTCCRA	16	16, 32	2 to 5 PCLKA	2, 3 ICLK		Not present in versions with 64 or 48 pins.
000C 2A92h	GPT7	General PWM Timer Compare Capture Register B	GTCCRB	16	16, 32	2 to 5 PCLKA	2, 3 ICLK		Not present in versions with 64 or 48 pins.
000C 2A94h	GPT7	General PWM Timer Compare Capture Register C	GTCCRC	16	16, 32	2 to 5 PCLKA	2, 3 ICLK		Not present in versions with 64 or 48 pins.
000C 2A96h	GPT7	General PWM Timer Compare Capture Register D	GTCCRD	16	16, 32	2 to 5 PCLKA	2, 3 ICLK		Not present in versions with 64 or 48 pins.
000C 2A98h	GPT7	General PWM Timer Compare Capture Register E	GTCCRE	16	16, 32	2 to 5 PCLKA	2, 3 ICLK		Not present in versions with 64 or 48 pins.
000C 2A9Ah	GPT7	General PWM Timer Compare Capture Register F	GTCCRF	16	16, 32	2 to 5 PCLKA	2, 3 ICLK		Not present in versions with 64 or 48 pins.
000C 2A9Ch	GPT7	General PWM Timer Cycle Setting Register	GTPR	16	16, 32	2 to 5 PCLKA	2, 3 ICLK		Not present in versions with 64 or 48 pins.
000C 2A9Eh	GPT7	General PWM Timer Cycle Setting Buffer Register	GTPBR	16	16, 32	2 to 5 PCLKA	2, 3 ICLK		Not present in versions with 64 or 48 pins.
000C 2AA0h	GPT7	General PWM Timer Cycle Setting Double-Buffer Register	GTPDBR	16	16, 32	2 to 5 PCLKA	2, 3 ICLK		Not present in versions with 64 or 48 pins.
000C 2AA4h	GPT7	A/D Converter Start Request Timing Register A	GTADTRA	16	16, 32	2 to 5 PCLKA	2, 3 ICLK		Not present in versions with 64 or 48 pins.
000C 2AA6h	GPT7	A/D Converter Start Request Timing Buffer Register A	GTADTBRA	16	16, 32	2 to 5 PCLKA	2, 3 ICLK		Not present in versions with 64 or 48 pins.

Downloaded from Arrow.com.

Table 4.1 List of I/O Registers (Address Order) (46/48)

Address	Module Symbol	Register Name	Register Symbol	Number of Bits	Access Size	Number of Access States		Module Name	Remarks
						ICLK ≥ PCLK	ICLK < PCLK		
000C 2AA8h	GPT7	A/D Converter Start Request Timing Double-Buffer Register A	GTADTDBRA	16	16, 32	2 to 5 PCLKA	2, 3 ICLK	GPT	Not present in versions with 64 or 48 pins.
000C 2AACh	GPT7	A/D Converter Start Request Timing Register B	GTADTRB	16	16, 32	2 to 5 PCLKA	2, 3 ICLK		Not present in versions with 64 or 48 pins.
000C 2AAEh	GPT7	A/D Converter Start Request Timing Buffer Register B	GTADTBRB	16	16, 32	2 to 5 PCLKA	2, 3 ICLK		Not present in versions with 64 or 48 pins.
000C 2AB0h	GPT7	A/D Converter Start Request Timing Double-Buffer Register B	GTADTDBRB	16	16, 32	2 to 5 PCLKA	2, 3 ICLK		Not present in versions with 64 or 48 pins.
000C 2AB4h	GPT7	General PWM Timer Output Negate Control Register	GTONCR	16	16, 32	2 to 5 PCLKA	2, 3 ICLK		Not present in versions with 64 or 48 pins.
000C 2AB6h	GPT7	General PWM Timer Dead Time Control Register	GTDTCR	16	16, 32	2 to 5 PCLKA	2, 3 ICLK		Not present in versions with 64 or 48 pins.
000C 2AB8h	GPT7	General PWM Timer Dead Time Value Register U	GTDVU	16	16, 32	2 to 5 PCLKA	2, 3 ICLK		Not present in versions with 64 or 48 pins.
000C 2ABAh	GPT7	General PWM Timer Dead Time Value Register D	GTDVD	16	16, 32	2 to 5 PCLKA	2, 3 ICLK		Not present in versions with 64 or 48 pins.
000C 2ABCh	GPT7	General PWM Timer Dead Time Buffer Register U	GTDBU	16	16, 32	2 to 5 PCLKA	2, 3 ICLK		Not present in versions with 64 or 48 pins.
000C 2ABEh	GPT7	General PWM Timer Dead Time Buffer Register D	GTDBD	16	16, 32	2 to 5 PCLKA	2, 3 ICLK		Not present in versions with 64 or 48 pins.
000C 2AC0h	GPT7	General PWM Timer Output Protection Function Status Register	GTSOS	16	16, 32	2 to 5 PCLKA	2, 3 ICLK		Not present in versions with 64 or 48 pins.
000C 2AC2h	GPT7	General PWM Timer Output Protection Function Temporary Release Register	GTSOTR	16	16, 32	2 to 5 PCLKA	2, 3 ICLK		Not present in versions with 64 or 48 pins.
000C3002h	DPC	Software Start Setting Register 0	SOFTSTART 0	16	16	3 to 5 PCLKA	2, 3 ICLK	DPC	Not present in versions with 64 or 48 pins.
000C3006h	DPC	Software Start Setting Register 1	SOFTSTART 1	16	16	3 to 5 PCLKA	2, 3 ICLK		Not present in versions with 64 or 48 pins.
000C300Ah	DPC	Software Start Setting Register 2	SOFTSTART 2	16	16	3 to 5 PCLKA	2, 3 ICLK		Not present in versions with 64 or 48 pins.
000C300Eh	DPC	Software Start Setting Register 3	SOFTSTART 3	16	16	3 to 5 PCLKA	2, 3 ICLK		Not present in versions with 64 or 48 pins.
000C3012h	DPC	Reference Value Setting Register 0	VOTARGET 0	16	16	3 to 5 PCLKA	2, 3 ICLK		Not present in versions with 64 or 48 pins.
000C3016h	DPC	Reference Value Setting Register 1	VOTARGET 1	16	16	3 to 5 PCLKA	2, 3 ICLK		Not present in versions with 64 or 48 pins.
000C301Ah	DPC	Reference Value Setting Register 2	VOTARGET 2	16	16	3 to 5 PCLKA	2, 3 ICLK		Not present in versions with 64 or 48 pins.
000C301Eh	DPC	Reference Value Setting Register 3	VOTARGET 3	16	16	3 to 5 PCLKA	2, 3 ICLK		Not present in versions with 64 or 48 pins.
000C3022h	DPC	Reference Value Select Register	REFSEL	16	16	3 to 5 PCLKA	2, 3 ICLK		Not present in versions with 64 or 48 pins.
000C3026h	DPC	PWM Channel Setting Register	CHLSEL	16	16	3 to 5 PCLKA	2, 3 ICLK		Not present in versions with 64 or 48 pins.
000C302Ah	DPC	Control Enable Setting Register	ENABLE	16	16	3 to 5 PCLKA	2, 3 ICLK		Not present in versions with 64 or 48 pins.
000C302Eh	DPC	Control Calculation Parameter Setting Register KP0	PARAMKP0	16	16	3 to 5 PCLKA	2, 3 ICLK		Not present in versions with 64 or 48 pins.
000C3032h	DPC	Control Calculation Parameter Setting Register KI0	PARAMKI0	16	16	3 to 5 PCLKA	2, 3 ICLK		Not present in versions with 64 or 48 pins.
000C3036h	DPC	Control Calculation Parameter Setting Register KQ0	PARAMKQ0	16	16	3 to 5 PCLKA	2, 3 ICLK		Not present in versions with 64 or 48 pins.
000C303Ah	DPC	Control Calculation Parameter Setting Register KF0	PARAMKF0	16	16	3 to 5 PCLKA	2, 3 ICLK		Not present in versions with 64 or 48 pins.
000C303Eh	DPC	Control Calculation Parameter Setting Register KP1	PARAMKP1	16	16	3 to 5 PCLKA	2, 3 ICLK		Not present in versions with 64 or 48 pins.
000C3042h	DPC	Control Calculation Parameter Setting Register KI1	PARAMKI1	16	16	3 to 5 PCLKA	2, 3 ICLK		Not present in versions with 64 or 48 pins.
000C3046h	DPC	Control Calculation Parameter Setting Register KQ1	PARAMKQ1	16	16	3 to 5 PCLKA	2, 3 ICLK		Not present in versions with 64 or 48 pins.
000C304Ah	DPC	Control Calculation Parameter Setting Register KF1	PARAMKF1	16	16	3 to 5 PCLKA	2, 3 ICLK		Not present in versions with 64 or 48 pins.
000C304Eh	DPC	Control Calculation Parameter Setting Register KP2	PARAMKP2	16	16	3 to 5 PCLKA	2, 3 ICLK		Not present in versions with 64 or 48 pins.
000C3052h	DPC	Control Calculation Parameter Setting Register KI2	PARAMKI2	16	16	3 to 5 PCLKA	2, 3 ICLK		Not present in versions with 64 or 48 pins.

Downloaded from Arrow.com.

Table 4.1 List of I/O Registers (Address Order) (47/48)

Address	Module Symbol	Register Name	Register Symbol	Number of Bits	Access Size	Number of Access States		Module Name	Remarks
						ICLK ≥ PCLK	ICLK < PCLK		
000C3056h	DPC	Control Calculation Parameter Setting Register KQ2	PARAMKQ2	16	16	3 to 5 PCLKA	2, 3 ICLK	DPC	Not present in versions with 64 or 48 pins.
000C305Ah	DPC	Control Calculation Parameter Setting Register KF2	PARAMKF2	16	16	3 to 5 PCLKA	2, 3 ICLK		Not present in versions with 64 or 48 pins.
000C305Eh	DPC	Control Calculation Parameter Setting Register KP3	PARAMKP3	16	16	3 to 5 PCLKA	2, 3 ICLK		Not present in versions with 64 or 48 pins.
000C3062h	DPC	Control Calculation Parameter Setting Register KI3	PARAMKI3	16	16	3 to 5 PCLKA	2, 3 ICLK		Not present in versions with 64 or 48 pins.
000C3066h	DPC	Control Calculation Parameter Setting Register KQ3	PARAMKQ3	16	16	3 to 5 PCLKA	2, 3 ICLK		Not present in versions with 64 or 48 pins.
000C306Ah	DPC	Control Calculation Parameter Setting Register KF3	PARAMKF3	16	16	3 to 5 PCLKA	2, 3 ICLK		Not present in versions with 64 or 48 pins.
000C306Ch	DPC	Control Calculation Result Higher-Order Bits Store Register 0	RESULTU0	16	16	3 to 5 PCLKA	2, 3 ICLK		Not present in versions with 64 or 48 pins.
000C306Eh	DPC	Control Calculation Result Lower-Order Bits Store Register 0	RESULTL0	16	16	3 to 5 PCLKA	2, 3 ICLK		Not present in versions with 64 or 48 pins.
000C3070h	DPC	Control Calculation Result Higher-Order Bits Store Register 1	RESULTU1	16	16	3 to 5 PCLKA	2, 3 ICLK		Not present in versions with 64 or 48 pins.
000C3072h	DPC	Control Calculation Result Lower-Order Bits Store Register 1	RESULTL1	16	16	3 to 5 PCLKA	2, 3 ICLK		Not present in versions with 64 or 48 pins.
000C3074h	DPC	Control Calculation Result Higher-Order Bits Store Register 2	RESULTU2	16	16	3 to 5 PCLKA	2, 3 ICLK		Not present in versions with 64 or 48 pins.
000C3076h	DPC	Control Calculation Result Lower-Order Bits Store Register 2	RESULTL2	16	16	3 to 5 PCLKA	2, 3 ICLK		Not present in versions with 64 or 48 pins.
000C3078h	DPC	Control Calculation Result Higher-Order Bits Store Register 3	RESULTU3	16	16	3 to 5 PCLKA	2, 3 ICLK		Not present in versions with 64 or 48 pins.
000C307Ah	DPC	Control Calculation Result Lower-Order Bits Store Register 3	RESULTL3	16	16	3 to 5 PCLKA	2, 3 ICLK		Not present in versions with 64 or 48 pins.
000C307Eh	DPC	Input Code Monitor Enable Register	TMONEN	16	16	3 to 5 PCLKA	2, 3 ICLK		Not present in versions with 64 or 48 pins.
000C3082h	DPC	Maximum Input Code Monitor Register 0	TMONMAX0	16	16	3 to 5 PCLKA	2, 3 ICLK		Not present in versions with 64 or 48 pins.
000C3086h	DPC	Minimum Input Code Monitor Register 0	TMONMIN0	16	16	3 to 5 PCLKA	2, 3 ICLK		Not present in versions with 64 or 48 pins.
000C308Ah	DPC	Maximum Input Code Monitor Register 1	TMONMAX1	16	16	3 to 5 PCLKA	2, 3 ICLK		Not present in versions with 64 or 48 pins.
000C308Eh	DPC	Minimum Input Code Monitor Register 1	TMONMIN1	16	16	3 to 5 PCLKA	2, 3 ICLK		Not present in versions with 64 or 48 pins.
000C3092h	DPC	Maximum Input Code Monitor Register 2	TMONMAX2	16	16	3 to 5 PCLKA	2, 3 ICLK		Not present in versions with 64 or 48 pins.
000C3096h	DPC	Minimum Input Code Monitor Register 2	TMONMIN2	16	16	3 to 5 PCLKA	2, 3 ICLK		Not present in versions with 64 or 48 pins.
000C309Ah	DPC	Maximum Input Code Monitor Register 3	TMONMAX3	16	16	3 to 5 PCLKA	2, 3 ICLK		Not present in versions with 64 or 48 pins.
000C309Eh	DPC	Minimum Input Code Monitor Register 3	TMONMIN3	16	16	3 to 5 PCLKA	2, 3 ICLK		Not present in versions with 64 or 48 pins.
000C30A2h	DPC	Overvoltage Output Error Judgment Threshold Setting Register 0	ERRVTH0	16	16	3 to 5 PCLKA	2, 3 ICLK		Not present in versions with 64 or 48 pins.
000C30A6h	DPC	Overvoltage Output Error Judgment Threshold Setting Register 1	ERRVTH1	16	16	3 to 5 PCLKA	2, 3 ICLK		Not present in versions with 64 or 48 pins.
000C30AAh	DPC	Overvoltage Output Error Judgment Threshold Setting Register 2	ERRVTH2	16	16	3 to 5 PCLKA	2, 3 ICLK		Not present in versions with 64 or 48 pins.
000C30AEh	DPC	Overvoltage Output Error Judgment Threshold Setting Register 3	ERRVTH3	16	16	3 to 5 PCLKA	2, 3 ICLK		Not present in versions with 64 or 48 pins.
000C30B2h	DPC	PWM Shut-Down at Overvoltage Output Error Setting Register	ERRDWN	16	16	3 to 5 PCLKA	2, 3 ICLK		Not present in versions with 64 or 48 pins.
007F C402h	FLASH	Flash Mode Register	FMODR	8	8	2, 3 FCLK	2, 3 ICLK	ROM/ E2 DataFlash Memory	
007F C410h	FLASH	Flash Access Status Register	FASTAT	8	8	2, 3 FCLK	2, 3 ICLK		
007F C411h	FLASH	Flash Access Error Interrupt Enable Register	FAEINT	8	8	2, 3 FCLK	2, 3 ICLK		
007F C412h	FLASH	Flash Ready Interrupt Enable Register	FRDYIE	8	8	2, 3 FCLK	2, 3 ICLK	ROM	
007F C440h	FLASH	E2 DataFlash Read Enable Register 0	DFLRE0	16	16	2, 3 FCLK	2, 3 ICLK	E2 DataFlash Memory	
007F C442h	FLASH	E2 DataFlash Read Enable Register 1	DFLRE1	16	16	2, 3 FCLK	2, 3 ICLK		
007F C450h	FLASH	E2 DataFlash P/E Enable Register 0	DFLWE0	16	16	2, 3 FCLK	2, 3 ICLK		
007F C452h	FLASH	E2 DataFlash P/E Enable Register 1	DFLWE1	16	16	2, 3 FCLK	2, 3 ICLK		

Downloaded from Arrow.com.

Table 4.1 List of I/O Registers (Address Order) (48/48)

Address	Module Symbol	Register Name	Register Symbol	Number of Bits	Access Size	Number of Access States		Module Name	Remarks
						ICLK ≥ PCLK	ICLK < PCLK		
007F FFB0h	FLASH	Flash Status Register 0	FSTATR0	8	8	2, 3 FCLK	2, 3 ICLK	ROM	
007F FFB1h	FLASH	Flash Status Register 1	FSTATR1	8	8	2, 3 FCLK	2, 3 ICLK		
007F FFB2h	FLASH	Flash P/E Mode Entry Register	FENTRYR	16	16	2, 3 FCLK	2, 3 ICLK	ROM/ E2 DataFlash Memory	
007F FFB4h	FLASH	Flash Protection Register	FPROTR	16	16	2, 3 FCLK	2, 3 ICLK	ROM	
007F FFB6h	FLASH	Flash Reset Register	FRESETR	16	16	2, 3 FCLK	2, 3 ICLK		
007F FFBAh	FLASH	FCU Command Register	FCMDR	16	16	2, 3 FCLK	2, 3 ICLK		
007F FFC8h	FLASH	FCU Processing Switching Register	FCPSR	16	16	2, 3 FCLK	2, 3 ICLK		
007F FFCAh	FLASH	E2 DataFlash Blank Check Control Register	DFLBCCNT	16	16	2, 3 FCLK	2, 3 ICLK	E2 DataFlash Memory	
007F FFCCh	FLASH	Flash P/E Status Register	FPESTAT	16	16	2, 3 FCLK	2, 3 ICLK	ROM	
007F FFCEh	FLASH	E2 DataFlash Blank Check Status Register	DFLBCSTAT	16	16	2, 3 FCLK	2, 3 ICLK	E2 DataFlash Memory	
007F FFE8h	FLASH	Peripheral Clock Notification Register	PCKAR	16	16	2, 3 FCLK	2, 3 ICLK	ROM	

Note: • This table shows the maximum specifications of I/O registers. The I/O registers of individual products correspond to the list of functions given as Table 1.2. For details, refer to Table 1.2, Comparison of Functions for Different Packages.
Note 1. When the register is accessed while the USB is operating, a delay may be generated in accessing.
Note 2. Odd addresses are not accessible in 16-bit units. Obtain 16-bit access to the two registers by access to the address of TMOCNTL.
Note 3. Pins USB0 and RIIC1 are not present in 112-pin products.
Note 4. Pins USB0, RIIC1, and SCI3 are not present in 100-pin products.
Note 5. Pins GPT4 to GPT7, USB0, RSPI1, RIIC1, SCI2, SCI3, CAN1, AD, and S12AD1 are not present in 64- and 48-pin products.

Downloaded from Arrow.com.

5. Electrical Characteristics [144-, 120-, 112- and 100-Pin Versions]

5.1 Absolute Maximum Ratings

Table 5.1 Absolute Maximum Ratings

Conditions: VSS = PLLVSS = VSS_USB = AVSS0 = AVSS = VREFL0 = 0 V

Item		Symbol	Value	Unit
Power supply voltage		VCC, PLLVCC	–0.3 to +6.5	V
USB power supply voltage		VCC_USB*1	–0.3 to +6.5	V
Analog power supply voltage		AVCC0, AVCC*2	–0.3 to +6.5	V
Reference power supply voltage		VREFH0*2	–0.3 to AVCC0 + 0.3	V
		VREF*2	–0.3 to AVCC0 + 0.3	V
Input voltage (except for ports 4 to 6, C, USB0_DP, and USB0_DM)		V_{in}	–0.3 to VCC + 0.3	V
Input voltage (USB0_DP and USB0_DM)		V_{in}	–0.3 to VCC_USB + 0.3	V
Input voltage (port 4)		V_{in}	–0.3 to AVCC0 + 0.3	V
Input voltage (ports 5, 6, and C)		V_{in}	–0.3 to AVCC + 0.3	V
Analog input voltage (port 4)		V_{AN}	–0.3 to AVCC0 + 0.3	V
Analog input voltage (ports 5, 6, and C)		V_{AN}	–0.3 to AVCC + 0.3	V
Operating temperature	D version product	T_{opr}	–40 to +85	ºC
	G version product	T_{opr}	–40 to +105	ºC
Storage temperature		T_{stg}	–55 to +125	ºC

Caution: Permanent damage to the LSI may result if absolute maximum ratings are exceeded.

Note 1. When the USB is not in use, do not leave the VCC_USB and VSS_USB pins open.
Connect the VCC_USB pin to VCC, and the VSS_USB pin to VSS, respectively.

Note 2. When the A/D converter is not in use, do not leave the AVCC0, VREFH0, VREFL0, AVSS0, AVCC, VREF, and AVSS pins open.
- When the 12-bit A/D converter is not in use
  Connect the AVCC0 pin to AVCC, the VREFH0 pin to VREF, and the AVSS0 and VREFL0 pins to AVSS, respectively.
- When the 10-bit A/D converter is not in use
  Connect the AVCC pin to AVCC0, the VREF pin to VREFH0, and the AVSS pin to AVSS0, respectively.
- When the 12-bit A/D converter and 10-bit A/D converter are not in use
  Connect the AVCC0, VREFH0, AVCC, and VREF pins to VCC, and the AVSS0, VREFL0, and AVSS pins to VSS, respectively.

Downloaded from Arrow.com.

5.2 DC Characteristics

Table 5.2 DC Characteristics (1)

Note: Common standard values for conditions not given in the table are listed as “Condition 1” to “Condition 3” below.

Condition 1: VCC = PLLVCC = VCC_USB = 2.7 to 3.6 V, VSS = PLLVSS = VSS_USB = AVSS0 = AVSS = VREFL0 = 0 V
AVCC0 = AVCC = VREF = 3.0 to 3.6 V, VREFH0 = 3.0 V to AVCC0

Condition 2: VCC = PLLVCC = VCC_USB = 2.7 to 3.6 V, VSS = PLLVSS = VSS_USB = AVSS0 = AVSS = VREFL0 = 0 V
AVCC0 = AVCC = VREF = 4.0 to 5.5 V, VREFH0 = 4.0 V to AVCC0

Condition 3: VCC = PLLVCC = 4.0 to 5.5 V, VCC_USB = 3.0 to 3.6 V, VSS = PLLVSS = VSS_USB = AVSS0 = AVSS = VREFL0 = 0 V
AVCC0 = AVCC = VREF = 4.0 to 5.5 V, VREFH0 = 4.0 V to AVCC0

The following relation applies when the USB is in use under condition 1 or condition 2: Vcc = PLLVcc = Vcc_USB = 3.0 to 3.6 V.

$T_a = T_{opr}$. T_a is common to conditions 1 to 3.

Item		Symbol	Min.	Typ.	Max.	Unit	Test Conditions
Schmitt trigger input voltage	CAN input pin IRQ input pin MTU3 input pin POE3 input pin SCI input pin A/D trigger input pin GPT input pin RES#, NMI	V_{IH}	VCC × 0.8	—	VCC + 0.3	V	
		V_{IL}	–0.3	—	VCC × 0.2		
		ΔV_T	VCC × 0.06	—	—		
	RIIC input pin (IICBus operating)	V_{IH}	VCC × 0.7	—	VCC + 0.3		
		V_{IL}	–0.3	—	VCC × 0.3		
		ΔV_T	VCC × 0.05	—	—		
	USB0_VBUS input pin	V_{IH}	VCC × 0.7	—	VCC + 0.3		
		V_{IL}	–0.3	—	VCC × 0.2		
		ΔV_T	VCC × 0.06	—	—		
	Port 4*1 (also used as an analog port)	V_{IH}	AVCC0 × 0.8	—	AVCC0 + 0.3		
		V_{IL}	–0.3	—	AVCC0 × 0.2		
	Ports 5, 6, and C*1 (also used as an analog port)	V_{IH}	AVCC × 0.8	—	AVCC + 0.3		
		V_{IL}	–0.3	—	AVCC × 0.2		
	Ports 0 to 3*1 Ports 7 to B*1 Ports D to G*1	V_{IH}	VCC × 0.8	—	VCC + 0.3		
		V_{IL}	–0.3	—	VCC × 0.2		
Input high voltage (except for Schmitt trigger input pin)	MD pin, EMLE	V_{IH}	VCC × 0.9	—	VCC + 0.3	V	
	EXTAL, WAIT#, TCK RSPI input pin		VCC × 0.8	—	VCC + 0.3		
	D0 to D15		VCC × 0.7	—	VCC + 0.3		
	RIIC input pin (SMBus operating)		2.1	—	VCC + 0.3		Conditions 1 and 2
Input low voltage (except for Schmitt trigger input pin)	MD pin, EMLE	V_{IL}	–0.3	—	VCC × 0.1	V	
	EXTAL, WAIT#, TCK RSPI input pin		–0.3	—	VCC × 0.2		
	D0 to D15		–0.3	—	VCC × 0.3		
	RIIC input pin (SMBus operating)		–0.3	—	0.8		Conditions 1 and 2

Note 1. This includes the multiplexed pin functions, except for P25, P26, PB1, or PB2 when the RIIC input functions are in use, P22 to P24, P30, PA3 to PA5, PB0, PD0 to PD2, or PD6 when the RSPI input functions are in use, and PD4 or PF3 when the TCK input function is in use.

Downloaded from Arrow.com.

Table 5.3 DC Characteristics (2)

Note: Common standard values for conditions not given in the table are listed as “Condition 1” to “Condition 3” below.

Condition 1: VCC = PLLVCC = VCC_USB = 2.7 to 3.6 V, VSS = PLLVSS = VSS_USB = AVSS0 = AVSS = VREFL0 = 0 V
AVCC0 = AVCC = VREF = 3.0 to 3.6 V, VREFH0 = 3.0 V to AVCC0

Condition 2: VCC = PLLVCC = VCC_USB = 2.7 to 3.6 V, VSS = PLLVSS = VSS_USB = AVSS0 = AVSS = VREFL0 = 0 V
AVCC0 = AVCC = VREF = 4.0 to 5.5 V, VREFH0 = 4.0 V to AVCC0

Condition 3: VCC = PLLVCC = 4.0 to 5.5 V, VCC_USB = 3.0 to 3.6 V, VSS = PLLVSS = VSS_USB = AVSS0 = AVSS = VREFL0 = 0 V
AVCC0 = AVCC = VREF = 4.0 to 5.5 V, VREFH0 = 4.0 V to AVCC0

The following relation applies when the USB is in use under condition 1 or condition 2: Vcc = PLLVcc = Vcc_USB = 3.0 to 3.6 V.

$T_a = T_{opr}$. T_a is common to conditions 1 to 3.

Item		Symbol	Min.	Typ.	Max.	Unit	Test Conditions
Output high voltage	All output pins (except for P52, P53, P60 to P65, P71 to P76, P90 to P95, and USB0_DPUPE)	V_{OH}	VCC – 0.5	—	—	V	I_{OH} = –1 mA
	P52, P53, and P60 to P65		AVCC – 0.5	—	—		I_{OH} = –1 mA
	USB0_DPUPE		VCC_USB – 0.5				I_{OH} = –1 mA
	P71 to P76, and P90 to P95		VCC – 1.0	—	—		I_{OH} = –5 mA
Output low voltage	All output pins (except for P71 to P76, P90 to P95, and RIIC pins)	V_{OL}	—	—	0.5	V	I_{OL} = 1.0 mA
	P71 to P76, and P90 to P95		—	—	1.1		I_{OL} = 15 mA
	RIIC pins		—	—	0.4		I_{OL} = 3 mA
			—	—	0.6		I_{OL} = 6 mA
Input leakage current	RES#, MD pin, EMLE, Port 4, Ports P50, P51, P54 to P57, and Port C	$\lvert I_{in} \rvert$	—	—	1.0	μA	V_{in} = 0 V, V_{in} = VCC
Three-state leakage current (off state)	Port 0, Port 1, Ports P20 to P24, Port 3, Ports P52, P53, Ports 6 to A, Ports PB0, PB3 to PB7, and Ports D to G	$\lvert I_{TSI} \rvert$	—	—	1.0	μA	V_{in} = 0 V, V_{in} = VCC
	Ports P25, P26, PB1, and PB2		—	—	5.0		
Input capacitance	All output pins (except for P25, P26, PB1, and PB2)	C_{in}	—	—	15	pF	V_{in} = 0 V, f = 1 MHz, T_a = 25 ºC
	Ports P25, P26, PB1, and PB2		—	—	30		

Downloaded from Arrow.com.

Table 5.4 DC Characteristics (3)

Note: Common standard values for conditions not given in the table are listed as “Condition 1” to “Condition 3” below.

Condition 1: VCC = PLLVCC = VCC_USB = 2.7 to 3.6 V, VSS = PLLVSS = VSS_USB = AVSS0 = AVSS = VREFL0 = 0 V
AVCC0 = AVCC = VREF = 3.0 to 3.6 V, VREFH0 = 3.0 V to AVCC0

Condition 2: VCC = PLLVCC = VCC_USB = 2.7 to 3.6 V, VSS = PLLVSS = VSS_USB = AVSS0 = AVSS = VREFL0 = 0 V
AVCC0 = AVCC = VREF = 4.0 to 5.5 V, VREFH0 = 4.0 V to AVCC0

Condition 3: VCC = PLLVCC = 4.0 to 5.5 V, VCC_USB = 3.0 to 3.6 V, VSS = PLLVSS = VSS_USB = AVSS0 = AVSS = VREFL0 = 0 V
AVCC0 = AVCC = VREF = 4.0 to 5.5 V, VREFH0 = 4.0 V to AVCC0

The following relation applies when the USB is in use under condition 1 or condition 2: Vcc = PLLVcc = Vcc_USB = 3.0 to 3.6 V.

$T_a = T_{opr}$. T_a is common to conditions 1 to 3.

Item			Symbol	Min.	Typ.	Max.	Unit	Test Conditions
Supply current *1	During operation	Max. *2	I_{CC}*3	—	—	70	mA	ICLK = 100 MHz PCLKA = 100 MHz PCLKB = 50 MHz PCLKC = 100 MHz PCLKD = 50 MHz FCLK = 50 MHz
		Normal *4		—	40	—		
		Increased by BGO operation *5		—	15	—		
	Sleep mode				40	55		
	All-module-clock-stop mode *6				20	30		
	During standby	Software standby mode		—	0.10	3	mA	
		Deep software standby mode		—	20	60	μA	
Analog power supply current	During 12-bit A/D conversion (per unit)		AI_{CC0}	—	1.5	4.2	mA	
	Programmable gain amplifier (per channel)			—	1	1.5	mA	
	Window comparator (per channel)			—	0.5	0.7	mA	
	Waiting for 12-bit A/D conversion (all units)			—	0.1	8	μA	
	During 10-bit A/D conversion (per channel)		AI_{CC}	—	0.9	1.4	mA	
	During D/A conversion (per unit)				0.1	4	μA	
	Waiting for 10-bit A/D, D/A conversion (all units)			—	0.1	4	μA	
Reference power supply current	During 12-bit A/D conversion (per unit)		AI_{REFH0}	—	1.6	2.5	mA	
	Waiting for 12-bit A/D conversion (all units)			—	0.1	1.5	μA	
	During 10-bit A/D conversion (per channel)		AI_{REF}	—	0.2	0.3	mA	
	During D/A conversion (per unit)				1	1.5	mA	
	Waiting for 10-bit A/D, D/A conversion (all units)			—	0.1	1.2	μA	
VCC rising gradient			SV_{CC}	—	—	20	ms/V	

Note 1. Supply current values are with all output pins unloaded.
Note 2. Measured with clocks supplied to the peripheral functions. This does not include the BGO operation.
Note 3. I_{CC} depends on f (ICLK) as follows. (ICLK: PCLK = 8:4)
I_{CC} max = 0.6 × f + 10 (max)
I_{CC} typ = 0.3 × f + 10 (normal)
I_{CC} max = 0.45 × f + 10 (sleep mode)
Note 4. Measured with clocks not supplied to the peripheral functions. This does not include the BGO operation.
Note 5. Incremented if data is written to or erased from the on-chip ROM or on-chip data-flash memory for data storage during the program execution.
Note 6. The values are for reference.

Downloaded from Arrow.com.

Table 5.5 Permissible Output Currents

Note: Common standard values for conditions not given in the table are listed as “Condition 1” to “Condition 3” below.

Condition 1: VCC = PLLVCC = VCC_USB = 2.7 to 3.6 V, VSS = PLLVSS = VSS_USB = AVSS0 = AVSS = VREFL0 = 0 V
AVCC0 = AVCC = VREF = 3.0 to 3.6 V, VREFH0 = 3.0 V to AVCC0

Condition 2: VCC = PLLVCC = VCC_USB = 2.7 to 3.6 V, VSS = PLLVSS = VSS_USB = AVSS0 = AVSS = VREFL0 = 0 V
AVCC0 = AVCC = VREF = 4.0 to 5.5 V, VREFH0 = 4.0 V to AVCC0

Condition 3: VCC = PLLVCC = 4.0 to 5.5 V, VCC_USB = 3.0 to 3.6 V, VSS = PLLVSS = VSS_USB = AVSS0 = AVSS = VREFL0 = 0 V
AVCC0 = AVCC = VREF = 4.0 to 5.5 V, VREFH0 = 4.0 V to AVCC0

The following relation applies when the USB is in use under condition 1 or condition 2: Vcc = PLLVcc = Vcc_USB = 3.0 to 3.6 V.

$T_a = T_{opr}$. T_a is common to conditions 1 to 3.

Item		Symbol	Min.	Typ.	Max.	Unit
Permissible output low current (average value per pin)	All output pins (except for P71 to P76, P90 to P95, and RIIC pins)*1	I_{OL}	—	—	2.0	mA
	RIIC pins	I_{OL}	—	—	6.0	mA
	P71 to P76, and P90 to P95*2	I_{OL}	—	—	15.0	mA
Permissible output low current (max. value per pin)	All output pins (except for P71 to P76, P90 to P95, and RIIC pins)*1	I_{OL}	—	—	4.0	mA
	RIIC pins	I_{OL}	—	—	6.0	mA
	P71 to P76, and P90 to P95*2	I_{OL}	—	—	15.0	mA
Permissible output low current (total)	Total of output pins	ΣI_{OL}	—	—	110	mA
Permissible output high current (average value per pin)	All output pins (except for P71 to P76, P90 to P95, and USB0_DPUPE pin)*1	$-I_{OH}$	—	—	2.0	mA
	USB0_DPUPE pin	$-I_{OH}$	—	—	3.0	mA
	P71 to P76, and P90 to P95*2	$-I_{OH}$	—	—	5.0	mA
Permissible output high current (max. value per pin)	All output pins (except for P71 to P76, P90 to P95)*1	$-I_{OH}$	—	—	4.0	mA
	P71 to P76, and P90 to P95*2	$-I_{OH}$	—	—	5.0	mA
Permissible output high current (total)		$\Sigma -I_{OH}$	—	—	35	mA

Note 1. USB0_DP and USB0_DM are not included.

Note 2. For pins P71 to P76 and P90 to P95, I_{OL} = 15 mA (max.) and $-I_{OH}$ = 5 mA (max.). However, if several of the pins are to supply I_{OL} and $-I_{OH}$ of more than 2.0 mA at the same time, the number of pins should be six or less.

Caution: To protect the MCU’s reliability, the output current values should not exceed the values in this table.

Downloaded from Arrow.com.

Table 5.6 Permissible Power Consumption (G version product only)

Note: Common standard values for conditions not given in the table are listed as “Condition 1” to “Condition 3” below.

Condition 1: VCC = PLLVCC = 2.7 to 3.6 V, VSS = PLLVSS = AVSS0 = AVSS = VREFL0 = 0 V
AVCC0 = AVCC = 3.0 to 3.6V, VREFH0 = 3.0 V to AVCC0, VREF = 3.0 V to AVCC

Condition 2: VCC = PLLVCC = 2.7 to 3.6 V, VSS = PLLVSS = AVSS0 = AVSS = VREFL0 = 0V
AVCC0 = AVCC = 4.0 to 5.5 V, VREFH0 = 4.0 V to AVCC0, VREF = 4.0 V to AVCC

Condition 3: VCC = PLLVCC = 4.0 to 5.5 V, VSS = PLLVSS = AVSS0 = AVSS = VREFL0 = 0V
AVCC0 = AVCC = 4.0 to 5.5V, VREFH0 = 4.0 V to AVCC0, VREF = 4.0 V to AVCC

Ta = -40 to +105°C. Ta is common to conditions 1 to 3.

Item	Symbol	Typ.	Max.	Unit	Test Conditions
Total permissible power consumption*1	Pd	—	345	mW	85°C < Ta ≤ 105°C

Note: • Please contact Renesas Electronics sales office for derating of operation under Ta = +85°C to +105°C. Derating is the systematic reduction of load for the sake of improved reliability.

Note 1. The total power consumption of the whole chip including output current.

Downloaded from Arrow.com.

5.3 AC Characteristics

Table 5.7 Operation Frequency Value

Note: Common standard values for conditions not given in the table are listed as “Condition 1” to “Condition 3” below.

Condition 1: VCC = PLLVCC = VCC_USB = 2.7 to 3.6 V, VSS =PLLVSS = VSS_USB = AVSS0 = AVSS = VREFL0 = 0 V
AVCC0 = AVCC = VREF = 3.0 to 3.6 V, VREFH0 = 3.0 V to AVCC0

Condition 2: VCC = PLLVCC = VCC_USB = 2.7 to 3.6 V, VSS = PLLVSS = VSS_USB = AVSS0 = AVSS = VREFL0 = 0 V
AVCC0 = AVCC = VREF = 4.0 to 5.5 V, VREFH0 = 4.0 V to AVCC0

Condition 3: VCC = PLLVCC = 4.0 to 5.5 V, VCC_USB = 3.0 to 3.6 V, VSS = PLLVSS = VSS_USB = AVSS0 = AVSS = VREFL0 = 0 V
AVCC0 = AVCC = VREF = 4.0 to 5.5 V, VREFH0 = 4.0 V to AVCC0

$T_a = T_{opr}$. T_a is common to conditions 1 to 3.

Item		Symbol	Min.	Typ.	Max.	Unit
Operation frequency	System clock (ICLK)	f	—	—	100	MHz
	Peripheral module clock (PCLK) *1		—	—	50	
	Timer module clock (PCLKA)		—	—	100	
	AD clock (PCLKC)		—	—	100	
	S12AD clock (PCLKD)		—	—	50	
	FlashIF clock (FCLK)		—	—	50	
	External bus clock (BCLK)		—	—	50	
	BCLK pin output		—	—	25	
	USB clock (UCLK)		—	—	48	

Note 1. The PCLK must run at a frequency of at least 24 MHz when the USB is in use.

Downloaded from Arrow.com.

5.3.1 Reset Timing

Table 5.8 Reset Timing

Note: Common standard values for conditions not given in the table are listed as “Condition 1” to “Condition 3” below.

Condition 1: VCC = PLLVCC = VCC_USB = 2.7 to 3.6 V, VSS = PLLVSS = VSS_USB = AVSS0 = AVSS = VREFL0 = 0 V
AVCC0 = AVCC = VREF = 3.0 to 3.6 V, VREFH0 = 3.0 V to AVCC0

Condition 2: VCC = PLLVCC = VCC_USB = 2.7 to 3.6 V, VSS = PLLVSS = VSS_USB = AVSS0 = AVSS = VREFL0 = 0 V
AVCC0 = AVCC = VREF = 4.0 to 5.5 V, VREFH0 = 4.0 V to AVCC0

Condition 3: VCC = PLLVCC = 4.0 to 5.5 V, VCC_USB = 3.0 to 3.6 V, VSS = PLLVSS = VSS_USB = AVSS0 = AVSS = VREFL0 = 0 V
AVCC0 = AVCC = VREF = 4.0 to 5.5 V, VREFH0 = 4.0 V to AVCC0

$T_a = T_{opr}$. T_a is common to conditions 1 to 3.

Item		Symbol	Min.	Typ.	Max.	Unit	Test Conditions
RES# pulse width	Power-on	t_{RESWP}	2	—	—	ms	Figure 5.1
	Deep software standby mode	t_{RESWD}	1	—	—	ms	Figure 5.2
	Software standby mode	t_{RESWS}	1	—	—	ms	
	Programming or erasure of the ROM or E2 DataFlash memory or blank checking of the E2 DataFlash memory	t_{RESWF}	200	—	—	μs	
	Other than above	t_{RESW}	200	—	—	μs	
Wait time after RES# cancellation		t_{RESWT}	59	—	60	t_{cyc}	
Internal reset time (independent watchdog timer reset, watchdog timer reset, software reset)		t_{RESW2}	112	—	120	t_{cyc}	

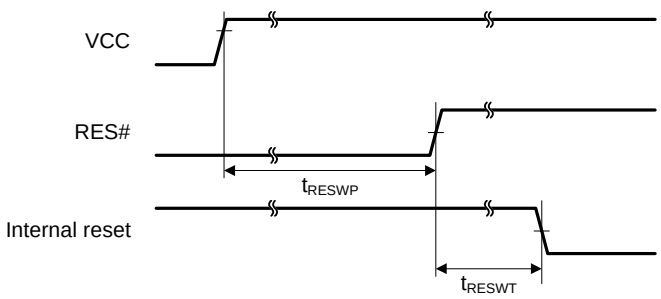

Figure 5.1 Reset Input Timing at Power-On

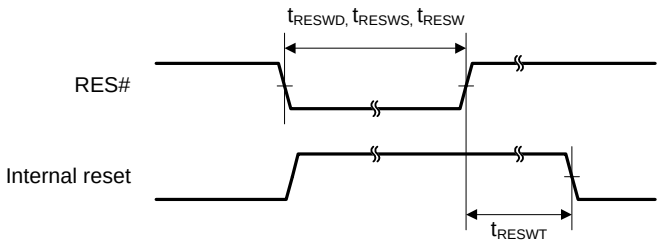

Figure 5.2 Reset Input Timing

Downloaded from Arrow.com.

5.3.2 Clock Timing

Table 5.9 Clock Timing

Note: Common standard values for conditions not given in the table are listed as “Condition 1” to “Condition 3” below.

Condition 1: VCC = PLLVCC = VCC_USB = 2.7 to 3.6 V, VSS = PLLVSS = VSS_USB = AVSS0 = AVSS = VREFL0 = 0 V
AVCC0 = AVCC = VREF = 3.0 to 3.6 V, VREFH0 = 3.0 V to AVCC0

Condition 2: VCC = PLLVCC = VCC_USB = 2.7 to 3.6 V, VSS = PLLVSS = VSS_USB = AVSS0 = AVSS = VREFL0 = 0 V
AVCC0 = AVCC = VREF = 4.0 to 5.5 V, VREFH0 = 4.0 V to AVCC0

Condition 3: VCC = PLLVCC = 4.0 to 5.5 V, VCC_USB = 3.0 to 3.6 V, VSS = PLLVSS = VSS_USB = AVSS0 = AVSS = VREFL0 = 0 V
AVCC0 = AVCC = VREF = 4.0 to 5.5 V, VREFH0 = 4.0 V to AVCC0

$T_a = T_{opr}$. T_a is common to conditions 1 to 3.

Item		Symbol	Min.	Typ.	Max.	Unit	Test Conditions
BCLK pin output cycle time	Only condition 3	t_{Bcyc}	20	—	—	ns	Figure 5.3
	Other than condition 3	t_{Bcyc}	40	—	—	ns	
BCLK pin output high pulse width		t_{CH}	5	—	—	ns	
BCLK pin output low pulse width		t_{CL}	5	—	—	ns	
BCLK pin output rising time		t_{Cr}	—	—	5	ns	
BCLK pin output falling time		t_{Cf}	—	—	5	ns	
EXTAL external clock input cycle time		t_{EXcyc}	70	—	—	ns	Figure 5.4
EXTAL external clock input high pulse width		t_{EXH}	35	—	—	ns	
EXTAL external clock input low pulse width		t_{EXL}	35	—	—	ns	
EXTAL external clock rising time		t_{EXr}	—	—	5	ns	
EXTAL external clock falling time		t_{EXf}	—	—	5	ns	
EXTAL external clock input wait time*1		t_{EXWT}	1	—	—	ms	
Main clock oscillator oscillation frequency		f_{MAIN}	8	—	12.5	MHz	
Main clock oscillation stabilization time (crystal)		$t_{MAINOSC}$	—	—	*2	ms	Figure 5.5
Main clock oscillation stabilization wait time (crystal)		$t_{MAINOSCWT}$	—	—	*3	ms	
LOCO, IWDTCLK clock cycle time		$t_{LOCOCYC}$	6.96	8	9.4	μs	
LOCO, IWDTCLK clock oscillation frequency		f_{LOCO}	106.25	125	143.75	kHz	
LOCO, IWDTCLK clock oscillation stabilization wait time		t_{LOCOWT}	—	—	20	μs	Figure 5.6
PLL clock frequency		f_{PLL}	104	—	200	MHz	
PLL clock oscillation stabilization time	PLL operation started after main clock oscillation has settled	t_{PLL1}	—	—	500	μs	Figure 5.7
PLL clock oscillation stabilization wait time		t_{PLLWT1}	—	—	*4	ms	
PLL clock oscillation stabilization time	PLL operation started before main clock oscillation has settled	t_{PLL2}	—	—	$t_{MAINOSC} + t_{PLL1}$	ms	Figure 5.8
PLL clock oscillation stabilization wait time		t_{PLLWT2}	—	—	*4	ms	

Note 1. This is the time until the clock is used after clearing the main clock oscillator stop bit (MOSCCR.MOSTP) to 0 (selecting operation).

Note 2. When using a main clock, ask the manufacturer of the oscillator to evaluate its oscillation. Refer to the results of evaluation provided by the manufacturer for the oscillation stabilization time.

Note 3. This is calculated from the formula below, where n is the number of cycles set by the MOSCWTCR.MSTS[4:0] bits.

$$t_{MAINOSCWT} = t_{MAINOSC} + \frac{n + 16384}{f_{MAIN}}$$

Downloaded from Arrow.com.

Note 4. This is calculated from the formula below, where n is the number of cycles set by the PLLWTCR.PSTS[4:0] bits.

$$t_{PLLWT1} = t_{PLL1} + \frac{n + 131072}{f_{PLL}}$$

$$t_{PLLWT2} = t_{PLL2} + \frac{n + 131072}{f_{PLL}} = t_{MAINOSC} + t_{PLL1} + \frac{n + 131072}{f_{PLL}}$$

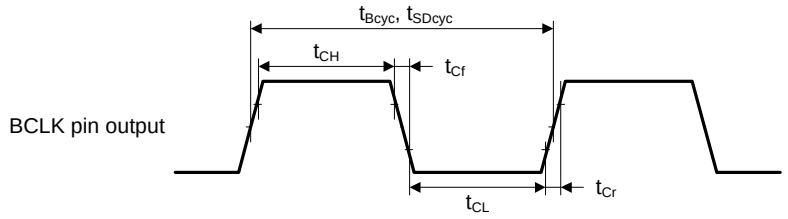

Test conditions: VOH = VCC × 0.7, VOL = VCC × 0.3, IOH = –1.0 mA, IOL = 1.0 mA, C = 30 pF

Figure 5.3 BCLK Pin Output Timing

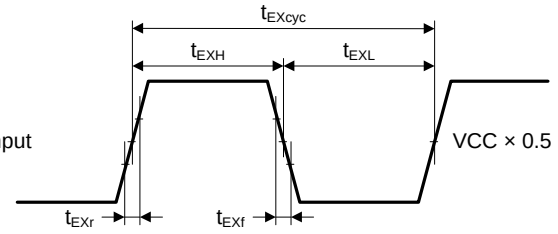

Figure 5.4 EXTAL External Clock Input Timing

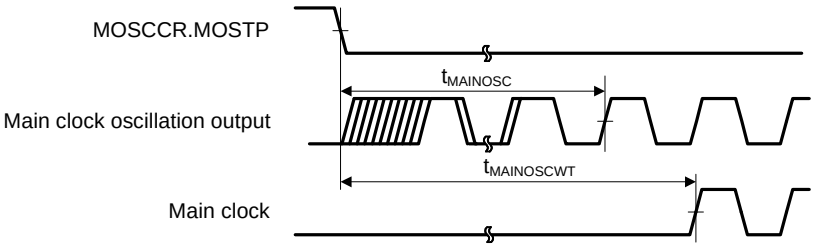

Figure 5.5 Main Clock Oscillation Start Timing

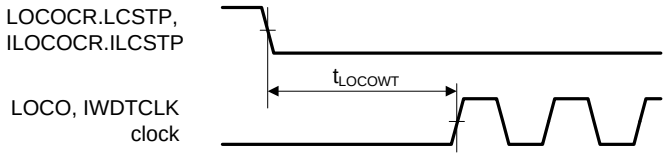

Figure 5.6 LOCO, IWDTCLK Clock Oscillation Start Timing

Downloaded from Arrow.com.

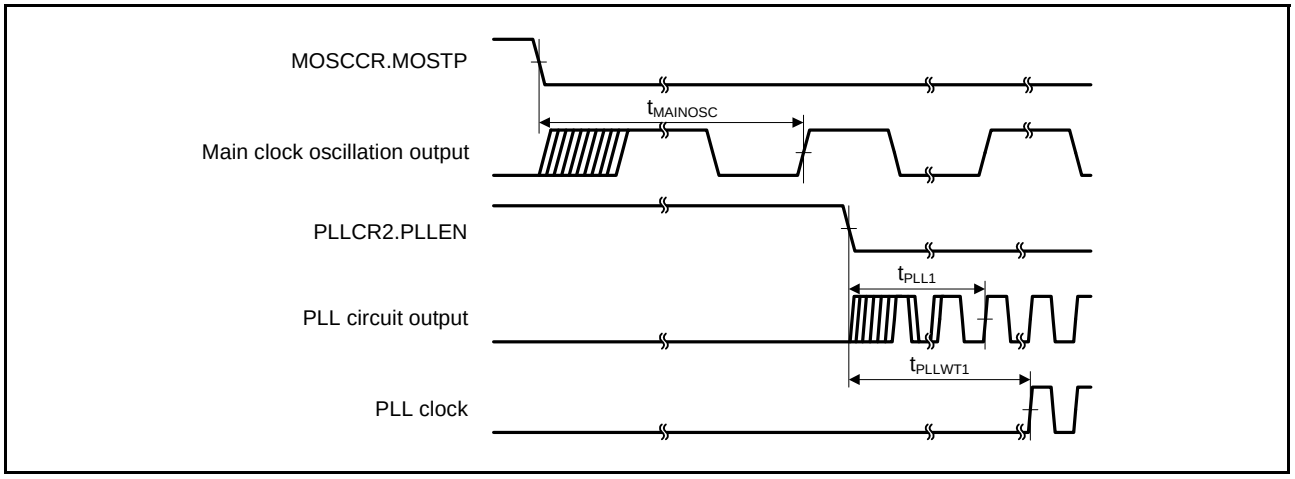

Figure 5.7 PLL Clock Oscillation Start Timing (PLL is Operated after Main Clock Oscillation Has Settled)

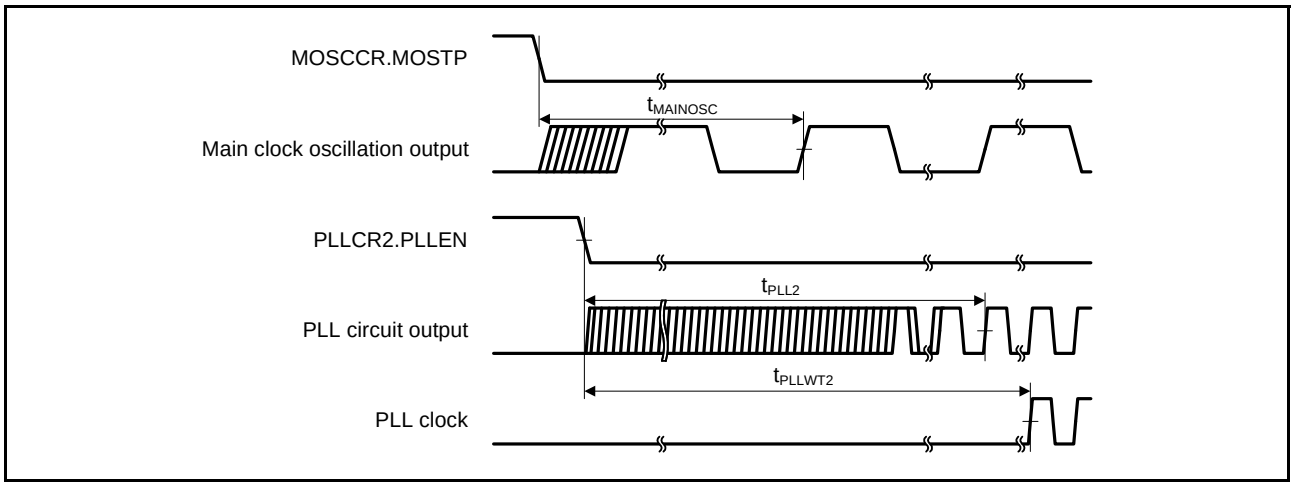

Figure 5.8 PLL Clock Oscillation Start Timing (PLL is Operated before Main Clock Oscillation Has Settled)

Downloaded from Arrow.com.

5.3.3 Timing of Recovery from Low Power Consumption Modes

Table 5.10 Timing of Recovery from Low Power Consumption Modes

Note: Common standard values for conditions not given in the table are listed as “Condition 1” to “Condition 3” below.

Condition 1: VCC = PLLVCC = VCC_USB = 2.7 to 3.6 V, VSS = PLLVSS = VSS_USB = AVSS0 = AVSS = VREFL0 = 0 V
AVCC0 = AVCC = VREF = 3.0 to 3.6 V, VREFH0 = 3.0 V to AVCC0

Condition 2: VCC = PLLVCC = VCC_USB = 2.7 to 3.6 V, VSS = PLLVSS = VSS_USB = AVSS0 = AVSS = VREFL0 = 0 V
AVCC0 = AVCC = VREF = 4.0 to 5.5 V, VREFH0 = 4.0 V to AVCC0

Condition 3: VCC = PLLVCC = 4.0 to 5.5 V, VCC_USB = 3.0 to 3.6 V, VSS = PLLVSS = VSS_USB = AVSS0 = AVSS = VREFL0 = 0 V
AVCC0 = AVCC = VREF = 4.0 to 5.5 V, VREFH0 = 4.0 V to AVCC0

$T_a = T_{opr}$. T_a is common to conditions 1 to 3.

Item			Symbol	Min.	Typ.	Max.	Unit	Test Conditions
Recovery time after cancellation of software standby mode	Crystal resonator connected to main clock oscillator	Main clock oscillator operating	t_{SBYMC}	10	—	—	ms	Figure 5.9
		Main clock oscillator and PLL circuit operating	t_{SBYPC}	10	—	—	ms	
	External clock input to main clock oscillator	Main clock oscillator operating	t_{SBYEX}	1	—	—	ms	
		Main clock oscillator and PLL circuit operating	t_{SBYPE}	1	—	—	ms	
	Low-speed clock oscillator or IWDT-specific low-speed clock oscillator operating		t_{SBYLO}	—	—	800	μs	
Recovery time after cancellation of deep software standby mode			t_{DSBY}	—	—	1	ms	Figure 5.10
Wait time after cancellation of deep software standby mode			t_{DSBYWT}	45	—	46	t_{cyc}	

Note: • The wait time varies depending on the state in which each oscillator was when the WAIT instruction was executed. The recovery time when multiple oscillators are operating is the same period as that when the oscillator, which takes the longest time for recovery among the operating oscillators, is operating alone.

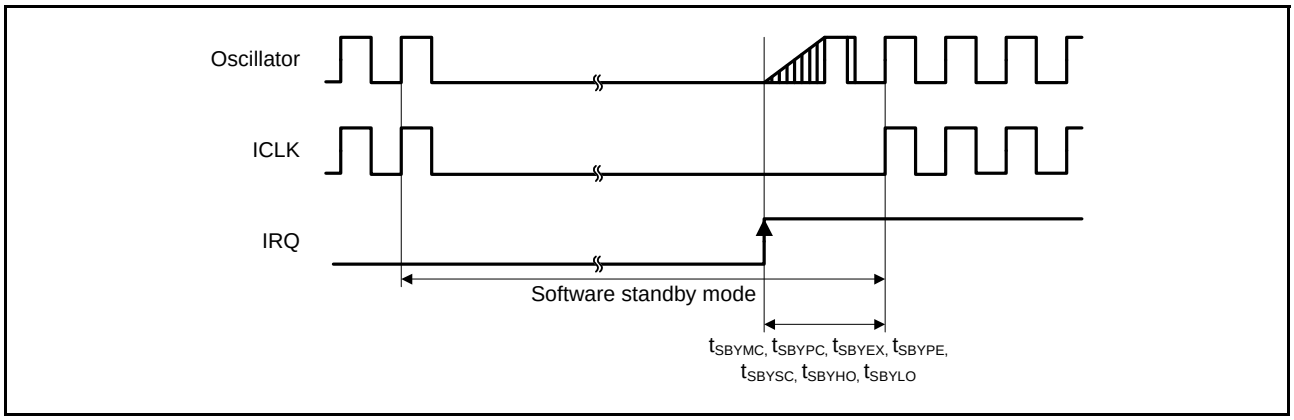

Figure 5.9 Software Standby Mode Cancellation Timing

Downloaded from Arrow.com.

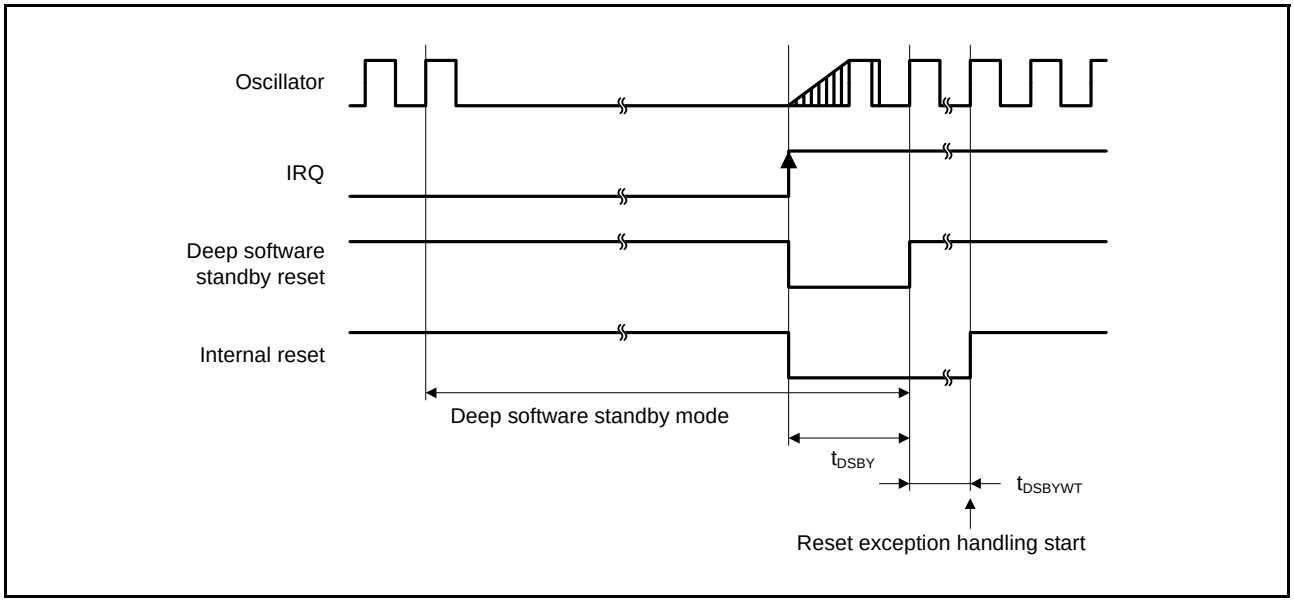

Figure 5.10 Deep Software Standby Mode Cancellation Timing

Downloaded from Arrow.com.

5.3.4 Control Signal Timing

Table 5.11 Control Signal Timing

Note: Common standard values for conditions not given in the table are listed as “Condition 1” to “Condition 3” below.

Condition 1: VCC = PLLVCC = VCC_USB = 2.7 to 3.6 V, VSS = PLLVSS = VSS_USB = AVSS0 = AVSS = VREFL0 = 0 V
AVCC0 = AVCC = VREF = 3.0 to 3.6 V, VREFH0 = 3.0 V to AVCC0

Condition 2: VCC = PLLVCC = VCC_USB = 2.7 to 3.6 V, VSS = PLLVSS = VSS_USB = AVSS0 = AVSS = VREFL0 = 0 V
AVCC0 = AVCC = VREF = 4.0 to 5.5 V, VREFH0 = 4.0 V to AVCC0

Condition 3: VCC = PLLVCC = 4.0 to 5.5 V, VCC_USB = 3.0 to 3.6 V, VSS = PLLVSS = VSS_USB = AVSS0 = AVSS = VREFL0 = 0 V
AVCC0 = AVCC = VREF = 4.0 to 5.5 V, VREFH0 = 4.0 V to AVCC0

$T_a = T_{opr}$. T_a is common to conditions 1 to 3.

Item	Symbol	Min.	Typ.	Max.	Unit	Test Conditions
NMI pulse width	t_{NMIW}	200	—	—	ns	t_c(PCLK) × 2 ≤ 200 ns, Figure 5.11
		t_c(PCLK) × 2	—	—	ns	t_c(PCLK) > 200 ns, Figure 5.11
IRQ pulse width	t_{IRQW}	200	—	—	ns	t_c(PCLK) ≤ 200 ns, Figure 5.12
		t_c(PCLK) × 2	—	—	ns	t_c(PCLK) > 200 ns, Figure 5.12

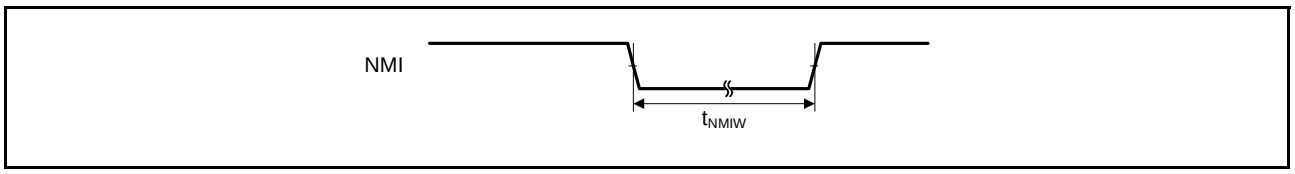

Figure 5.11 NMI Interrupt Input Timing

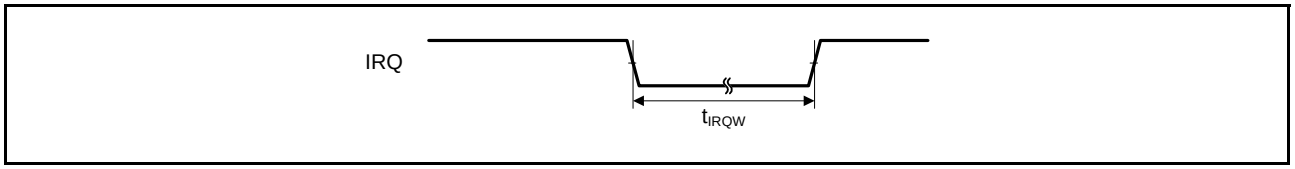

Figure 5.12 IRQ Interrupt Input Timing

Downloaded from Arrow.com.

5.3.5 Bus Timing

Table 5.12 Bus Timing (1)

Condition: VCC = PLLVCC = VCC_USB = AVCC0 = AVCC = 3.0 to 3.6 V,
VSS = PLLVSS = VSS_USB = AVSS0 = AVSS = VREFL0 = 0 V
VREFH0 = 3.0 V to AVCC0, VREF = 3.0 V to AVCC
$T_a = T_{opr}$
Output load conditions: V_{OH} = VCC x 0.5, V_{OL} = VCC x 0.5, I_{OH} = –1.0 mA, I_{OL} = 1.0 mA, C = 30 pF

Item	Symbol	Min.	Max.	Unit	Test Conditions
Address delay time	t_{AD}	—	30	ns	Figure 5.13 to Figure 5.16
Byte control delay time	t_{BCD}	—	30	ns	
CS# delay time	t_{CSD}	—	30	ns	
RD# delay time	t_{RSD}	—	30	ns	
Read data setup time	t_{RDS}	20	—	ns	
Read data hold time	t_{RDH}	0	—	ns	
WR# delay time	t_{WRD}	—	30	ns	
Write data delay time	t_{WDD}	—	35	ns	
Write data hold time	t_{WDH}	0	—	ns	
WAIT# setup time	t_{WTS}	20	—	ns	Figure 5.17
WAIT# hold time	t_{WTH}	0	—	ns	

Table 5.13 Bus Timing (2)

Condition: VCC = PLLVCC = AVCC0 = AVCC = 4.0 to 5.5 V, VCC_USB = 3.0 to 3.6 V,
VSS = PLLVSS = VSS_USB = AVSS0 = AVSS = VREFL0 = 0 V
VREFH0 = 4.0 V to AVCC0, VREF = 4.0 V to AVCC
$T_a = T_{opr}$
Output load conditions: V_{OH} = VCC x 0.5, V_{OL} = VCC x 0.5, I_{OH} = –1.0 mA, I_{OL} = 1.0 mA, C = 30 pF

Item	Symbol	Min.	Max.	Unit	Test Conditions
Address delay time	t_{AD}	—	15	ns	Figure 5.13 to Figure 5.16
Byte control delay time	t_{BCD}	—	15	ns	
CS# delay time	t_{CSD}	—	15	ns	
RD# delay time	t_{RSD}	—	15	ns	
Read data setup time	t_{RDS}	15	—	ns	
Read data hold time	t_{RDH}	0	—	ns	
WR# delay time	t_{WRD}	—	15	ns	
Write data delay time	t_{WDD}	—	15	ns	
Write data hold time	t_{WDH}	0	—	ns	
WAIT# setup time	t_{WTS}	15	—	ns	Figure 5.17
WAIT# hold time	t_{WTH}	0	—	ns	

Downloaded from Arrow.com.

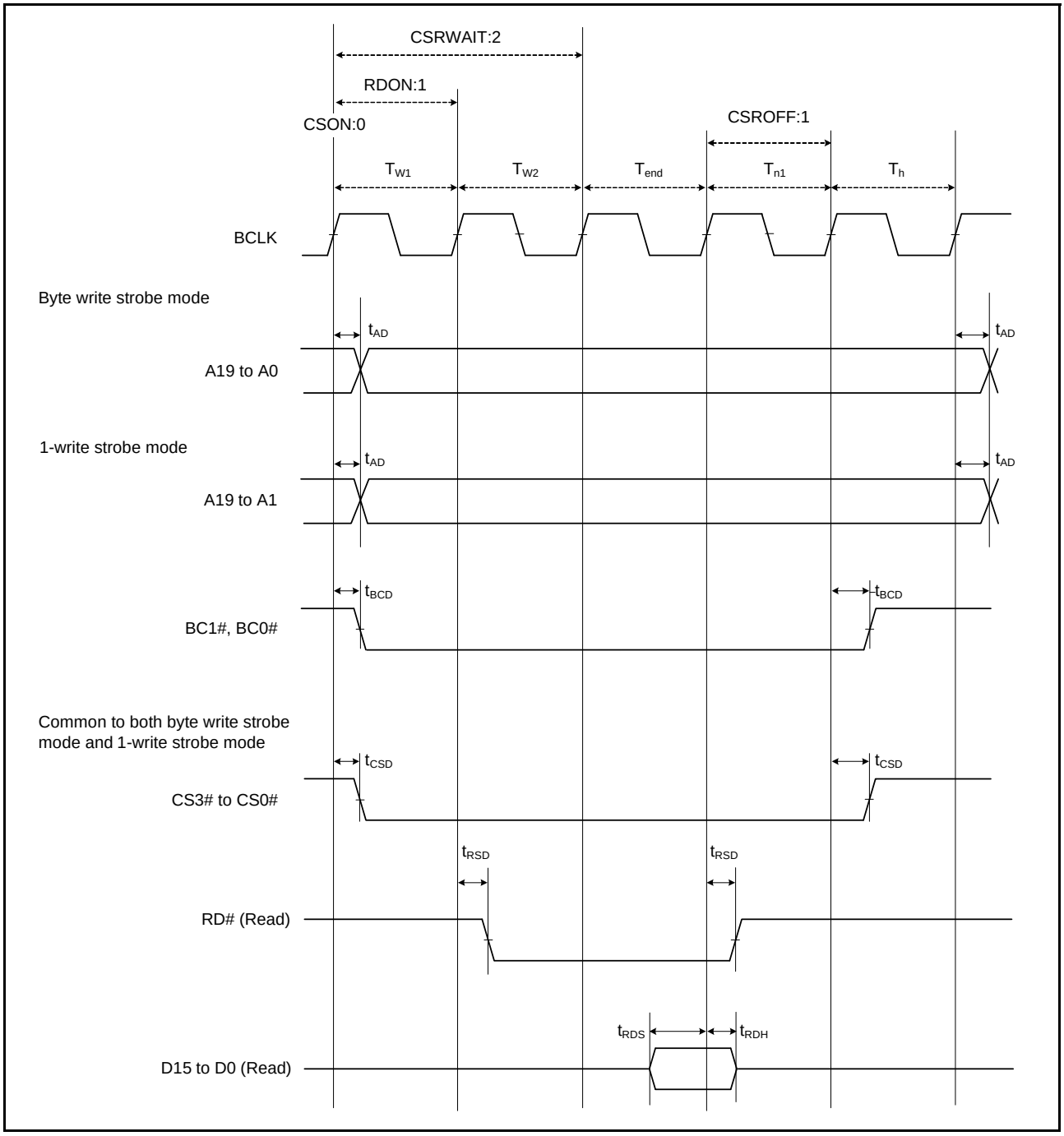

Figure 5.13 External Bus Timing/Normal Read Cycle (Bus Clock Synchronized)

Downloaded from Arrow.com.

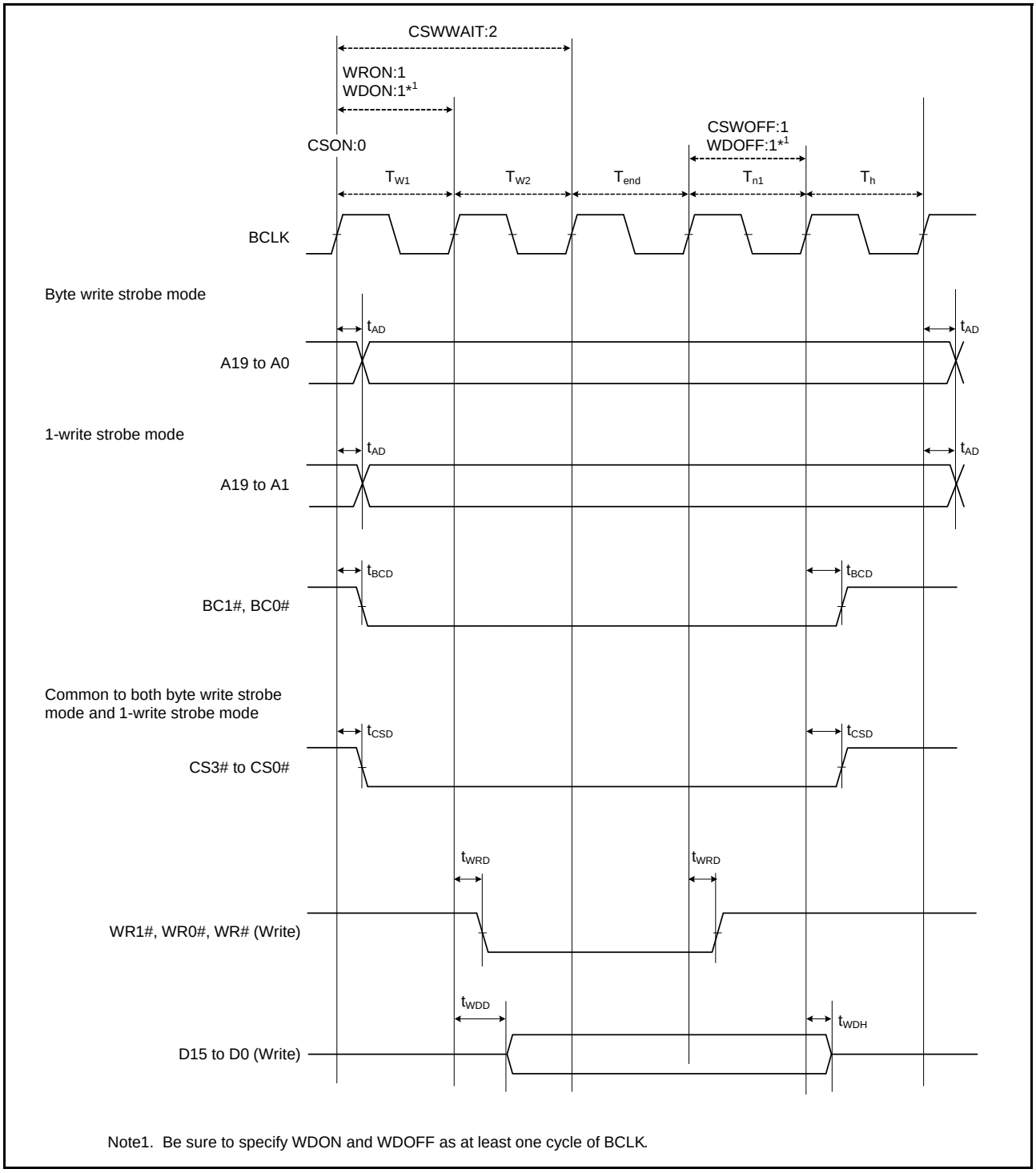

Figure 5.14 External Bus Timing/Normal Write Cycle (Bus Clock Synchronized)

Downloaded from Arrow.com.

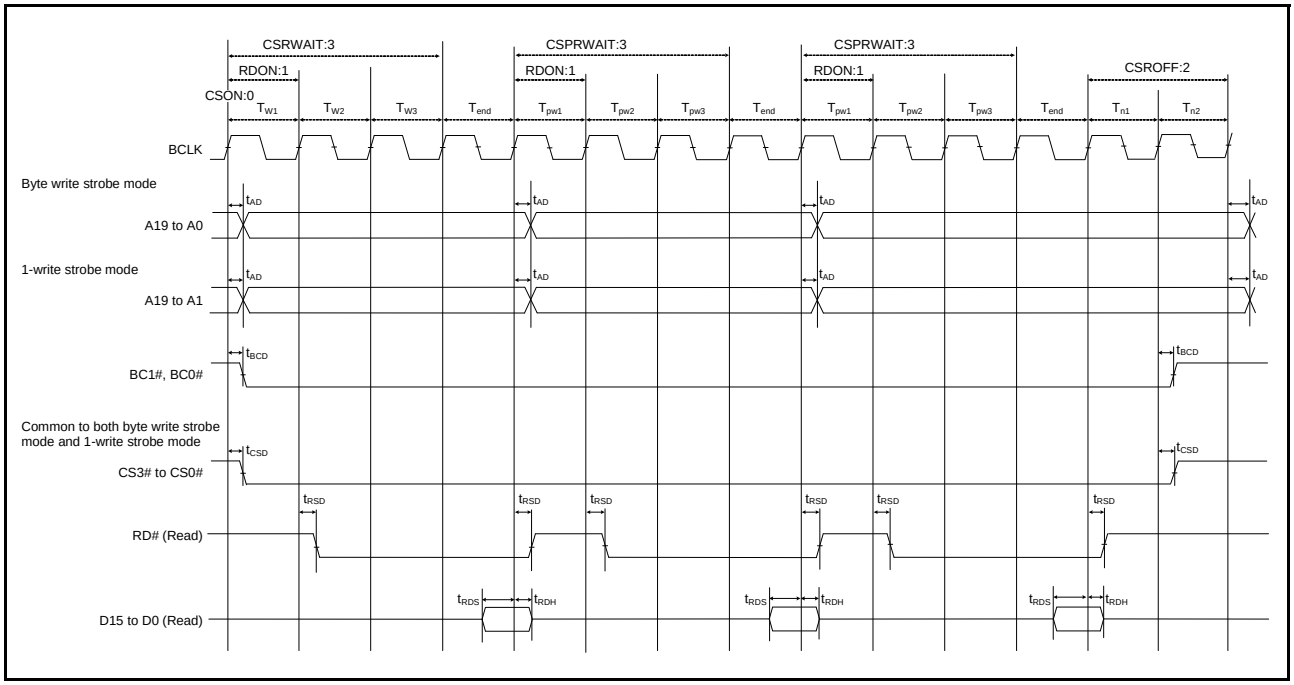

Figure 5.15 External Bus Timing/Page Read Cycle (Bus Clock Synchronized)

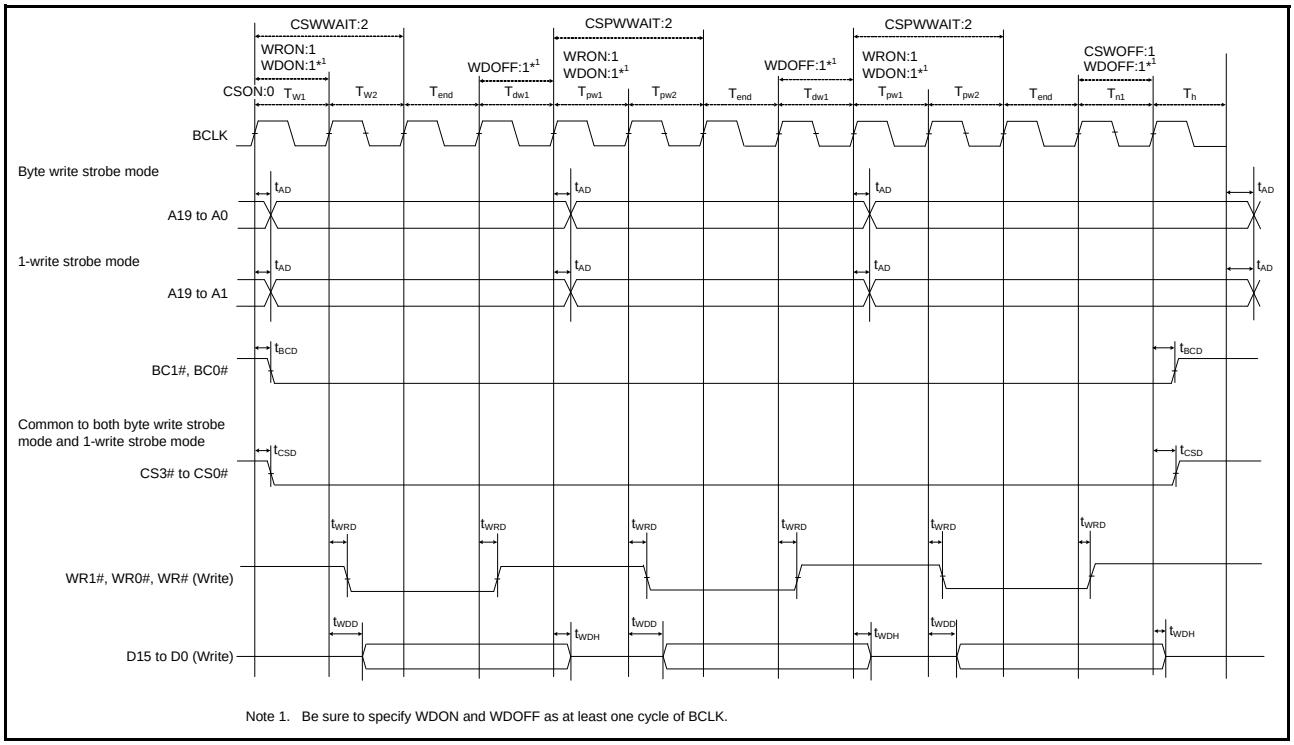

Note 1. Be sure to specify WDON and WDOFF as at least one cycle of BCLK.

Figure 5.16 External Bus Timing/Page Write Cycle (Bus Clock Synchronized)

Downloaded from Arrow.com.

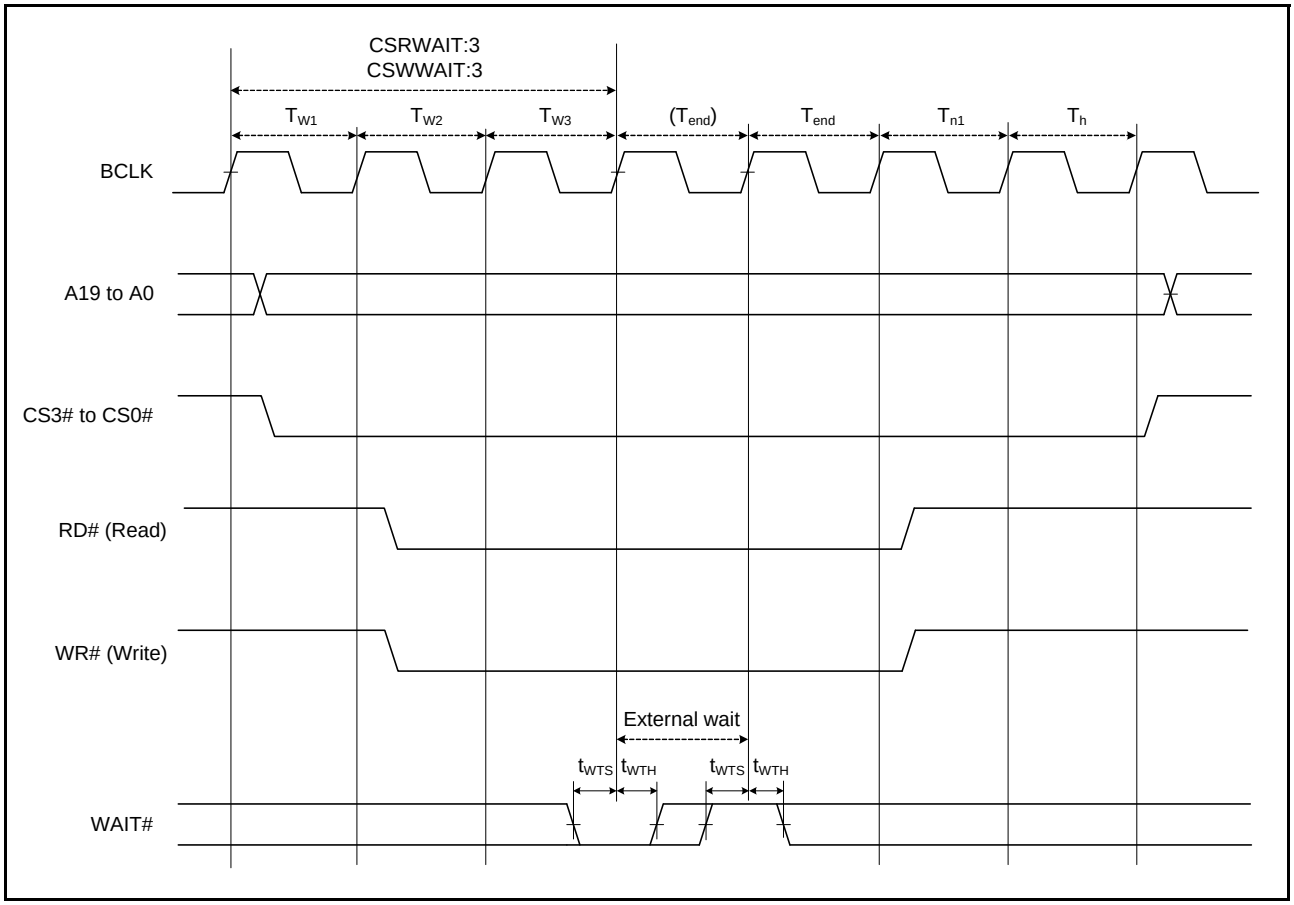

Figure 5.17 External Bus Timing/External Wait Control

Table 5.14 Bus Timing (Multiplexed Bus) (3)

Condition: PLLVCC = VCC_USB = AVCC0 = AVCC = VREF = 3.0 to 3.6 V
VSS = PLLVSS = VSS_USB = AVSS0 = AVSS = VREFL0 = 0 V, VREFH0 = 3.0 V to AVCC0
$T_a = T_{opr}$
Output load conditions: V_{OH} = VCC x 0.5, V_{OL} = VCC x 0.5, I_{OH} = –1.0 mA, I_{OL} = 1.0 mA, C = 30 pF

Item	Symbol	Min.	Max.	Unit	Test Conditions
Address delay time	t_{AD}	—	35	ns	Figure 5.18, Figure 5.19
Byte control delay time	t_{BCD}	—	30	ns	
CS# delay time	t_{CSD}	—	30	ns	
RD# delay time	t_{RSD}	—	30	ns	
ALE delay time	t_{ALED}	—	30	ns	
Read data setup time	t_{RDS}	20	—	ns	
Read data hold time	t_{RDH}	0	—	ns	
WR# delay time	t_{WRD}	—	30	ns	
Write data delay time	t_{WDD}	—	35	ns	
Write data hold time	t_{WDH}	0	—	ns	
WAIT# setup time	t_{WTS}	20	—	ns	Figure 5.17
WAIT# hold time	t_{WTH}	0.0	—	ns	

Downloaded from Arrow.com.

Table 5.15 Bus Timing (Multiplexed Bus) (4)

Condition: VCC = PLLVCC = AVCC0 = AVCC = VREF = 4.0 to 5.5 V, VCC_USB = 3.0 to 3.6 V
VSS = PLLVSS = VSS_USB = AVSS0 = AVSS = VREFL0 = 0 V, VREFH0 = 4.0 V to AVCC0
$T_a = T_{opr}$
Output load conditions: V_{OH} = VCC x 0.5, V_{OL} = VCC x 0.5, I_{OH} = –1.0 mA, I_{OL} = 1.0 mA, C = 30 pF

Item	Symbol	Min.	Max.	Unit	Test Conditions
Address delay time	t_{AD}	—	15	ns	Figure 5.18, Figure 5.19
Byte control delay time	t_{BCD}	—	15	ns	
CS# delay time	t_{CSD}	—	15	ns	
RD# delay time	t_{RSD}	—	15	ns	
ALE delay time	t_{ALED}	—	15	ns	
Read data setup time	t_{RDS}	15	—	ns	
Read data hold time	t_{RDH}	0	—	ns	
WR# delay time	t_{WRD}	—	15	ns	
Write data delay time	t_{WDD}	—	15	ns	
Write data hold time	t_{WDH}	0	—	ns	
WAIT# setup time	t_{WTS}	15	—	ns	Figure 5.17
WAIT# hold time	t_{WTH}	0.0	—	ns	

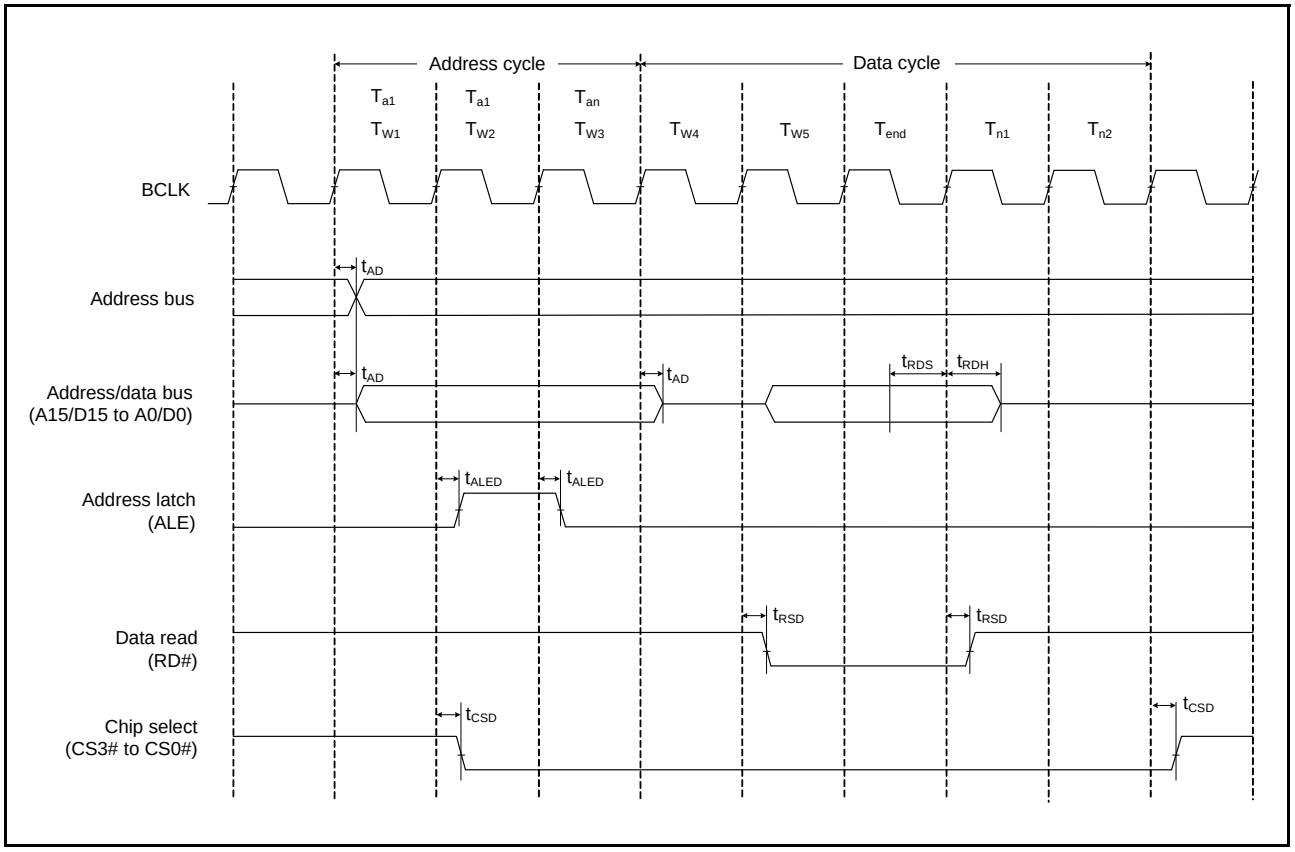

Figure 5.18 Example of External Bus Timing/Read Access Operation (Multiplexed)

Downloaded from Arrow.com.

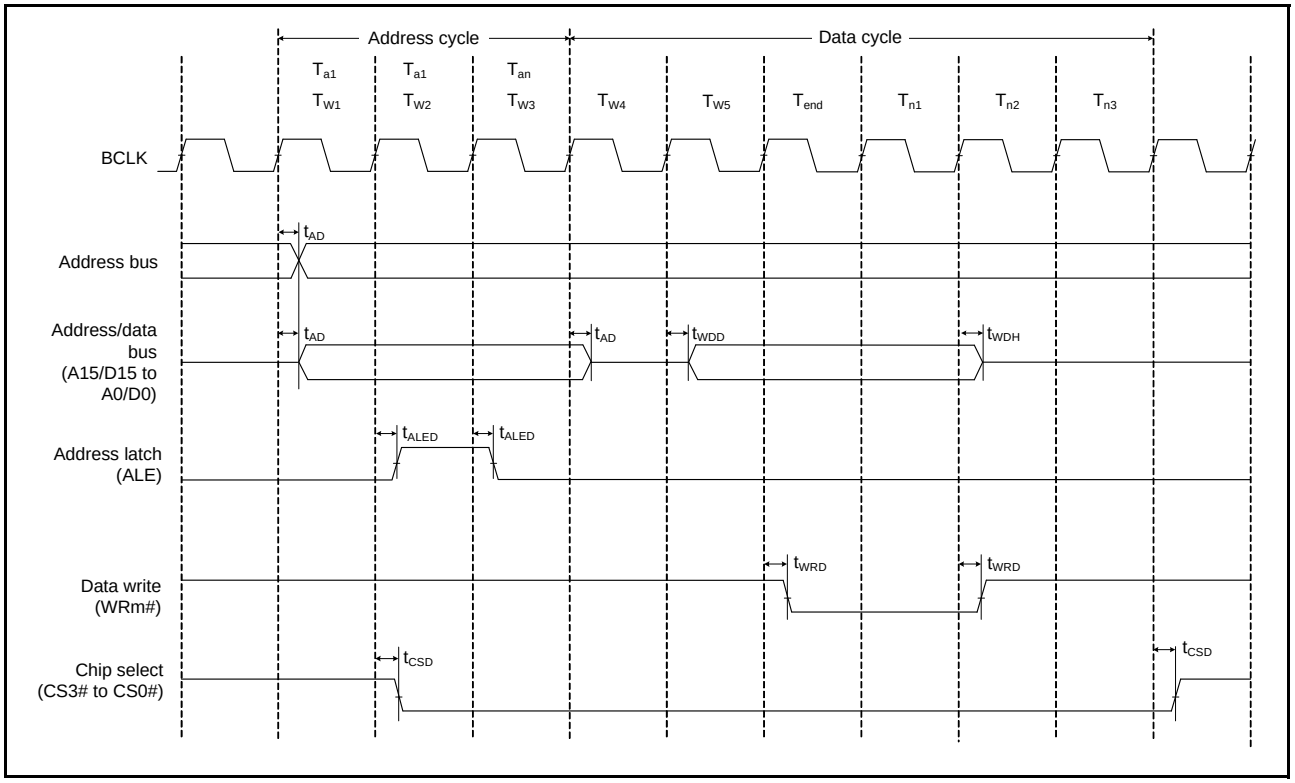

Figure 5.19 Example of External Bus Timing/Write Access Operation (Multiplexed)

Downloaded from Arrow.com.

5.3.6 Timing of On-Chip Peripheral Modules

Table 5.16 Timing of On-Chip Peripheral Modules (1)

Note: Common standard values for conditions not given in the table are listed as “Condition 1” to “Condition 3” below.

Condition 1: VCC = PLLVCC = VCC_USB = 2.7 to 3.6 V, VSS = PLLVSS = VSS_USB = AVSS0 = AVSS = VREFL0 = 0 V
AVCC0 = AVCC = VREF = 3.0 to 3.6 V, VREFH0 = 3.0 V to AVCC0

Condition 2: VCC = PLLVCC = VCC_USB = 2.7 to 3.6 V, VSS = PLLVSS = VSS_USB = AVSS0 = AVSS = VREFL0 = 0 V
AVCC0 = AVCC = VREF = 4.0 to 5.5 V, VREFH0 = 4.0 V to AVCC0

Condition 3: VCC = PLLVCC = 4.0 to 5.5 V, VCC_USB = 3.0 to 3.6 V, VSS = PLLVSS = VSS_USB = AVSS0 = AVSS = VREFL0 = 0 V
AVCC0 = AVCC = VREF = 4.0 to 5.5 V, VREFH0 = 4.0 V to AVCC0

$T_a = T_{opr}$. T_a is common to conditions 1 to 3.

Item			Symbol	Min.	Max.	Unit*1	Test Conditions
I/O ports	Input data pulse width		t_{PRW}	1.5	—	t_{Pcyc}	Figure 5.22
MTU3	Input capture input pulse width	Single-edge setting	t_{TICW}	3	—	t_{PAcyc}	Figure 5.23
		Both-edge setting		5	—		
	Input capture input fall time		t_{TICTF}	—	0.1	μs/V	When Input capture at rising edge, or Input capture at both edges is selected.
	Timer clock pulse width	Single-edge setting	t_{TCKWH}, t_{TCKWL}	3	—	t_{PAcyc}	Figure 5.25
		Both-edge setting		5	—		
		Phase counting mode		5	—		
	Timer clock input fall time		t_{TCKTF}	—	0.1	μs/V	
POE3	POE# input pulse width		t_{POEW}	1.5	—	t_{Pcyc}	Figure 5.28
GPT	Input capture input pulse width	Single-edge setting	t_{GTICW}	3	—	t_{PAcyc}	Figure 5.26
		Both-edge setting		5	—		
	Input capture input fall time		t_{GTICTF}	—	0.1	μs/V	When Input capture at rising edge, or Input capture at both edges is selected. When Count operation is started at rising edge, or Count operation is started at both edges is selected. When Count operation is stopped at rising edge, or Count operation is stopped at both edges is selected. When Counter is cleared at rising edge, or Counter is cleared at both edges is selected.
	External trigger input pulse width	Single-edge setting	t_{OTETW}	3	—	t_{PAcyc}	Figure 5.27
		Both-edge setting		5	—		
	External trigger input fall time		$t_{GTETRGTF}$	—	0.1	μs/V	When Count operation is started at rising edge, or Count operation is started at both edges is selected. When Count operation is stopped at rising edge, or Count operation is stopped at both edges is selected. When Counter is cleared at rising edge, or Counter is cleared at both edges is selected.

Downloaded from Arrow.com.

Table 5.16 Timing of On-Chip Peripheral Modules (2)

Note: Common standard values for conditions not given in the table are listed as “Condition 1” to “Condition 3” below.

Condition 1: VCC = PLLVCC = VCC_USB = 2.7 to 3.6 V, VSS = PLLVSS = VSS_USB = AVSS0 = AVSS = VREFL0 = 0 V
AVCC0 = AVCC = VREF = 3.0 to 3.6 V, VREFH0 = 3.0 V to AVCC0

Condition 2: VCC = PLLVCC = VCC_USB = 2.7 to 3.6 V, VSS = PLLVSS = VSS_USB = AVSS0 = AVSS = VREFL0 = 0 V
AVCC0 = AVCC = VREF = 4.0 to 5.5 V, VREFH0 = 4.0 V to AVCC0

Condition 3: VCC = PLLVCC = 4.0 to 5.5 V, VCC_USB = 3.0 to 3.6 V, VSS = PLLVSS = VSS_USB = AVSS0 = AVSS = VREFL0 = 0 V
AVCC0 = AVCC = VREF = 4.0 to 5.5 V, VREFH0 = 4.0 V to AVCC0

$T_a = T_{opr}$. T_a is common to conditions 1 to 3.

Item			Symbol	Min.	Max.	Unit*1	Test Conditions
SCI	Input clock cycle	Asynchronous	t_{Scyc}	4	—	t_{Pcyc}	C = 30 pF Figure 5.29
		Clock synchronous		6	—		
	Input clock pulse width		t_{SCKW}	0.4	0.6	t_{Scyc}	
	Input clock rise time		t_{SCKr}	—	20	ns	
	Input clock fall time		t_{SCKf}	—	20	ns	
	Output clock cycle	Asynchronous	t_{Scyc}	16	—	t_{Pcyc}	
		Clock synchronous		4	—		
	Output clock pulse width		t_{SCKW}	0.4	0.6	t_{Scyc}	
	Output clock rise time		t_{SCKr}	—	20	ns	
	Output clock fall time		t_{SCKf}	—	20	ns	
	Transmit data delay time	Clock synchronous	t_{TXD}	—	40	ns	Figure 5.30
	Receive data setup time	Clock synchronous	t_{RXS}	40	—	ns	
	Receive data hold time	Clock synchronous	t_{RXH}	40	—	ns	
	Receive data fall time		t_{TICTF}	—	0.1	μs/V	When Noise Cancellation Function is not used.
A/D converter	10-bit A/D converter trigger input pulse width		t_{TRGW}	1.5	—	t_{Pcyc}	Figure 5.31
	12-bit A/D converter trigger input pulse width			1.5	—		
CAC	CACREF input pulse width	$t_{Pcyc} \leq t_{cac}$*2	t_{CACREF}	4.5 t_{cac} + 3 t_{Pcyc}	—	ns	
		$t_{Pcyc} > t_{cac}$*2		5 t_{cac} + 6.5 t_{Pcyc}	—	ns	
	CACREF input fall time		$t_{CACREFTF}$	—	0.1	μs/V	

Note 1. t_{Pcyc}: PCLK cycle, t_{PAcye}: PCLKA cycle
Note 2. t_{cac}: CAC count clock source cycle.

Downloaded from Arrow.com.

Table 5.16 Timing of On-Chip Peripheral Modules (3)

Note: Common standard values for conditions not given in the table are listed as “Condition 1” to “Condition 3” below.

Condition 1: VCC = PLLVCC = VCC_USB = 2.7 to 3.6 V, VSS = PLLVSS = VSS_USB = AVSS0 = AVSS = VREFL0 = 0 V
AVCC0 = AVCC = VREF = 3.0 to 3.6 V, VREFH0 = 3.0 V to AVCC0

Condition 2: VCC = PLLVCC = VCC_USB = 2.7 to 3.6 V, VSS =PLLVSS = VSS_USB = AVSS0 = AVSS = VREFL0 = 0 V
AVCC0 = AVCC = VREF = 4.0 to 5.5 V, VREFH0 = 4.0 V to AVCC0

Condition 3: VCC = PLLVCC = 4.0 to 5.5 V, VCC_USB = 3.0 to 3.6 V, VSS = PLLVSS = VSS_USB = AVSS0 = AVSS = VREFL0 = 0 V
AVCC0 = AVCC = VREF = 4.0 to 5.5 V, VREFH0 = 4.0 V to AVCC0

$T_a = T_{opr}$. T_a is common to conditions 1 to 3.

High drive output is selected by the drive capacity control register.

Item				Symbol	Min.	Max.	Unit*1	Test Conditions
RSPI	RSPCK clock cycle	Master		t_{SPcyc}	2	4096	t_{Pcyc}	C = 30 pF, Figure 5.32
		Slave			8	4096		
	RSPCK clock high pulse width	Master		t_{SPCKWH}	$(t_{SPcyc} - t_{SPCKR} - t_{SPCKF}) / 2 - 3$	—	ns	
		Slave			$(t_{SPcyc} - t_{SPCKR} - t_{SPCKF}) / 2$	—		
	RSPCK clock low pulse width	Master		t_{SPCKWL}	$(t_{SPcyc} - t_{SPCKR} - t_{SPCKF}) / 2 - 3$	—	ns	
		Slave			$(t_{SPcyc} - t_{SPCKR} - t_{SPCKF}) / 2$	—		
	RSPCK clock rise/fall time	Output		t_{SPCKR}, t_{SPCKF}	—	5	ns	
		Input			—	1	μs	
	RSPCK clock fall time	Input		t_{SPCKF}	—	0.1	μs/V	
	Data input setup time	Master		t_{SU}	4	—	ns	C = 30 pF, Figure 5.33 to Figure 5.40
		Slave			20 – t_{Pcyc}	—		
	Data input hold time	Master	PCLKB division ratio set to a value other than 1/2	t_H	t_{Pcyc}	—	ns	
			PCLKB division ratio set to 1/2	t_{HF}	0	—		
		Slave		t_H	20 + 2 × t_{Pcyc}	—		
	SSL setup time	Master		t_{LEAD}	1	8	t_{SPcyc}	
		Slave			4	—	t_{Pcyc}	
	SSL hold time	Master		t_{LAG}	1	8	t_{SPcyc}	
		Slave			4	—	t_{Pcyc}	
	Data output delay time	Master		t_{OD}	—	10	ns	
		Slave			—	3 × t_{Pcyc} + 40		
	Data output hold time	Master		t_{OH}	0	—	ns	
		Slave			0	—		
	Successive transmission delay time	Master		t_{TD}	t_{SPcyc} + 2 × t_{Pcyc}	8 × t_{SPcyc}+ 2 × t_{Pcyc}	ns	
		Slave			4 × t_{Pcyc}	—		
	MOSI and MISO rise/fall time	Output		t_{DR}, t_{DF}	—	5	ns	
		Input			—	1	μs	
	SSL rise/fall time	Output		t_{SSLr}, t_{SSLf}	—	15	ns	
		Input			—	1	μs	
	Slave access time			t_{SA}	—	4	t_{Pcyc}	Figure 5.39 and Figure 5.40
	Slave output release time			t_{REL}	—	3	t_{Pcyc}	

Note 1. t_{Pcyc}: PCLK cycle

Downloaded from Arrow.com.

Table 5.16 Timing of On-Chip Peripheral Modules (4)

Note: Common standard values for conditions not given in the table are listed as “Condition 1” to “Condition 3” below.

Condition 1: VCC = PLLVCC = VCC_USB = 2.7 to 3.6 V, VSS = PLLVSS = VSS_USB = AVSS0 = AVSS = VREFL0 = 0 V
AVCC0 = AVCC = VREF = 3.0 to 3.6 V, VREFH0 = 3.0 V to AVCC0

Condition 2: VCC = PLLVCC = VCC_USB = 2.7 to 3.6 V, VSS = PLLVSS = VSS_USB = AVSS0 = AVSS = VREFL0 = 0 V
AVCC0 = AVCC = VREF = 4.0 to 5.5 V, VREFH0 = 4.0 V to AVCC0

Condition 3: VCC = PLLVCC = 4.0 to 5.5 V, VCC_USB = 3.0 to 3.6 V, VSS = PLLVSS = VSS_USB = AVSS0 = AVSS = VREFL0 = 0 V
AVCC0 = AVCC = VREF = 4.0 to 5.5 V, VREFH0 = 4.0 V to AVCC0

$T_a = T_{opr}$. T_a is common to conditions 1 to 3.

Item		Symbol	Min.	Max.	Unit*1	Test Conditions
Simple SPI	SCK clock cycle output (master)	t_{SPcyc}	4	65536	t_{Pcyc}	C = 30 pF, Figure 5.30
	SCK clock cycle input (slave)		8	65536		
	SCK clock high pulse width	t_{SPCKWH}	0.4	0.6	t_{SPcyc}	
	SCK clock low pulse width	t_{SPCKWL}	0.4	0.6	t_{SPcyc}	
	SCK clock rise/fall time	t_{SPCKR}, t_{SPCKF}	—	20	ns	
	Data input setup time	t_{SU}	40	—	ns	C = 30 pF, Figure 5.31 to Figure 5.38
	Data input hold time	t_H	40	—	ns	
	SS input setup time	t_{LEAD}	6	—	t_{Pcyc}	
	SS input hold time	t_{LAG}	6	—	t_{Pcyc}	
	Data output delay time	t_{OD}	—	40	ns	
	Data output hold time	t_{OH}	–10	—	ns	
	Data rise/fall time	t_{DR}, t_{DF}	—	20	ns	
	SS input rise/fall time	t_{SSLr}, t_{SSLf}	—	20	ns	
	Slave access time	t_{SA}	—	5	t_{Pcyc}	C = 30 pF, Figure 5.37 and Figure 5.38
	Slave output release time	t_{REL}	—	5	t_{Pcyc}	

Note 1. t_{Pcyc}: PCLK cycle

Downloaded from Arrow.com.

Table 5.16 Timing of On-Chip Peripheral Modules (5)

Note: Common standard values for conditions not given in the table are listed as “Condition 1” to “Condition 3” below.

Condition 1: VCC = PLLVCC = VCC_USB = 2.7 to 3.6 V, VSS = PLLVSS = VSS_USB = AVSS0 = AVSS = VREFL0 = 0 V
AVCC0 = AVCC = VREF = 3.0 to 3.6 V, VREFH0 = 3.0 V to AVCC0

Condition 2: VCC = PLLVCC = VCC_USB = 2.7 to 3.6 V, VSS = PLLVSS = VSS_USB = AVSS0 = AVSS = VREFL0 = 0 V
AVCC0 = AVCC = VREF = 4.0 to 5.5 V, VREFH0 = 4.0 V to AVCC0

Condition 3: VCC = PLLVCC = 4.0 to 5.5 V, VCC_USB = 3.0 to 3.6 V, VSS = PLLVSS = VSS_USB = AVSS0 = AVSS = VREFL0 = 0 V
AVCC0 = AVCC = VREF = 4.0 to 5.5 V, VREFH0 = 4.0 V to AVCC0

$T_a = T_{opr}$. T_a is common to conditions 1 to 3.

Item		Symbol	Min.*1,*2	Max.	Unit	Test Conditions
RIIC (Standard-mode)	SCL input cycle time	t_{SCL}	6(12) × t_{IICcyc} + 1300	—	ns	Figure 5.36
	SCL input high pulse width	t_{SCLH}	3(6) × t_{IICcyc} + 300	—	ns	
	SCL input low pulse width	t_{SCLL}	3(6) × t_{IICcyc} + 300	—	ns	
	SCL, SDA input rise time	t_{Sr}	—	1000	ns	
	SCL, SDA input fall time	t_{Sf}	—	300	ns	
	SCL, SDA input spike pulse removal time	t_{SP}	0	1(4) × t_{IICcyc}	ns	
	SDA input bus free time	t_{BUF}	3(6) × t_{IICcyc} + 300	—	ns	
	Start condition input hold time	t_{STAH}	t_{IICcyc} + 300	—	ns	
	Restart condition input setup time	t_{STAS}	1000	—	ns	
	Stop condition input setup time	t_{STOS}	1000	—	ns	
	Data input setup time	t_{SDAS}	t_{IICcyc} + 50	—	ns	
	Data input hold time	t_{SDAH}	0	—	ns	
	SCL, SDA capacitive load	C_b	—	400	pF	
RIIC (Fast-mode)	SCL input cycle time	t_{SCL}	6(12) × t_{IICcyc} + 600	—	ns	
	SCL input high pulse width	t_{SCLH}	3(6) × t_{IICcyc} + 300	—	ns	
	SCL input low pulse width	t_{SCLL}	3(6) × t_{IICcyc} + 300	—	ns	
	SCL, SDA input rise time	t_{Sr}	20 + 0.1C_b	300	ns	
	SCL, SDA input fall time	t_{Sf}	20 + 0.1C_b	300	ns	
	SCL, SDA input spike pulse removal time	t_{SP}	0	1(4) × t_{IICcyc}	ns	
	SDA input bus free time	t_{BUF}	3(6) × t_{IICcyc} + 300	—	ns	
	Start condition input hold time	t_{STAH}	t_{IICcyc} + 300	—	ns	
	Restart condition input setup time	t_{STAS}	300	—	ns	
	Stop condition input setup time	t_{STOS}	300	—	ns	
	Data input setup time	t_{SDAS}	t_{IICcyc} + 50	—	ns	
	Data input hold time	t_{SDAH}	0	—	ns	
	SCL, SDA capacitive load	C_b	—	400	pF	

Note: • t_{IICcyc}: RIIC internal reference clock (IICϕ) cycle

Note 1. The value within parentheses is applicable when the value of the ICMR3.NF[1:0] bits is 11b while the digital filter is enabled by the setting ICFER.NFE = 1.

Note 2. Cb is the total capacitance of the bus lines.

Downloaded from Arrow.com.

Table 5.16 Timing of On-Chip Peripheral Modules (6)

Note: Common standard values for conditions not given in the table are listed as “Condition 1” to “Condition 3” below.

Condition 1: VCC = PLLVCC = VCC_USB = 2.7 to 3.6 V, VSS = PLLVSS = VSS_USB = AVSS0 = AVSS = VREFL0 = 0 V
AVCC0 = AVCC = VREF = 3.0 to 3.6 V, VREFH0 = 3.0 V to AVCC0

Condition 2: VCC = PLLVCC = VCC_USB = 2.7 to 3.6 V, VSS = PLLVSS = VSS_USB = AVSS0 = AVSS = VREFL0 = 0 V
AVCC0 = AVCC = VREF = 4.0 to 5.5 V, VREFH0 = 4.0 V to AVCC0

Condition 3: VCC = PLLVCC = 4.0 to 5.5 V, VCC_USB = 3.0 to 3.6 V, VSS = PLLVSS = VSS_USB = AVSS0 = AVSS = VREFL0 = 0 V
AVCC0 = AVCC = VREF = 4.0 to 5.5 V, VREFH0 = 4.0 V to AVCC0

$T_a = T_{opr}$. T_a is common to conditions 1 to 3.

Item		Symbol	Min.*1, *2	Max.	Unit	Test Conditions
Simple IIC (Standard-mode)	SCL, SDA input rise time	t_{Sr}	—	1000	ns	Figure 5.36
	SCL, SDA input fall time	t_{Sf}	—	300	ns	
	SCL, SDA input spike pulse removal time	t_{SP}	0	$4 \times t_{Pcyc}$	ns	
	Data input setup time	t_{SDAS}	250	—	ns	
	Data input hold time	t_{SDAH}	0	—	ns	
	SCL, SDA capacitive load	C_b	—	400	pF	
Simple IIC (Fast-mode)	SCL, SDA input rise time	t_{Sr}	$20 + 0.1C_b$	300	ns	
	SCL, SDA input fall time	t_{Sf}	$20 + 0.1C_b$	300	ns	
	SCL, SDA input spike pulse removal time	t_{SP}	0	$4 \times t_{Pcyc}$	ns	
	Data input setup time	t_{SDAS}	100	—	ns	
	Data input hold time	t_{SDAH}	0	—	ns	
	SCL, SDA capacitive load	C_b	—	400	pF	

Note 1. The value in parentheses is used when ICMR3.NF[1:0] are set to 11b while a digital filter is enabled with ICFER.NFE = 1.
Note 2. Cb indicates the total capacity of the bus line.
Note 3. t_{Pcyc}: PCLK cycle

5.3.7 Timing of PWM Delay Generation Circuit

Table 5.17 Timing of the PWM Delay Generation Circuit

Condition 1: VCC = PLLVCC = 2.7 to 3.6 V, VSS = PLLVSS = AVSS0 = AVSS = VREFL0 = 0 V
AVCC0 = AVCC = 3.0 to 3.6 V, VREFH0 = 3.0 V to AVCC0, VREF = 3.0 V to AVCC

Condition 2: VCC = PLLVCC = 2.7 to 3.6 V, VSS = PLLVSS = AVSS0 = AVSS = VREFL0 = 0 V
AVCC0 = AVCC = 4.0 to 5.5 V, VREFH0 = 4.0 V to AVCC0, VREF = 4.0 V to AVCC

Condition 3: VCC = PLLVCC = 4.0 to 5.5 V, VSS = PLLVSS = AVSS0 = AVSS = VREFL0 = 0 V
AVCC0 = AVCC = 4.0 to 5.5 V, VREFH0 = 4.0 V to AVCC0, VREF = 4.0 V to AVCC

Ta = Topr. Ta is common to conditions 1 to 3.

Item	Symbol	Typ.	Max.	Unit	Test Conditions
Resolution	—	312.5	—	ps	PCLKA = 100 MHz
DNL*1	—	±2.0	—	LSB	

Note 1. This value is correct when the difference between each code and the next is a resolution of one bit (1 LSB).

Downloaded from Arrow.com.

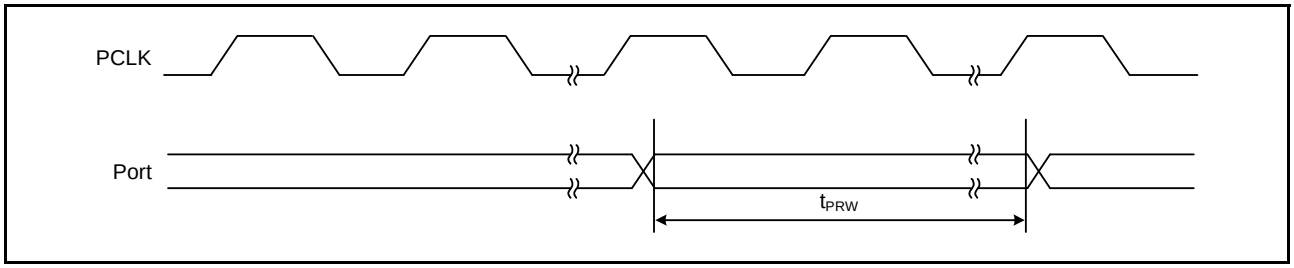

Figure 5.20 I/O port Input Timing

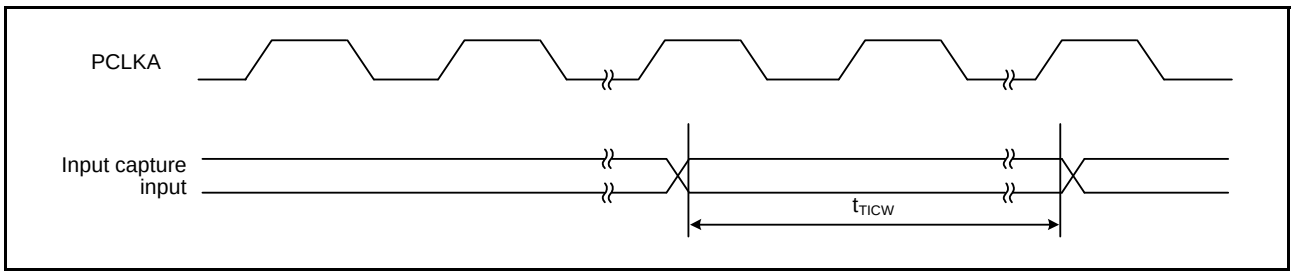

Figure 5.21 MTU3 Input/Output Timing

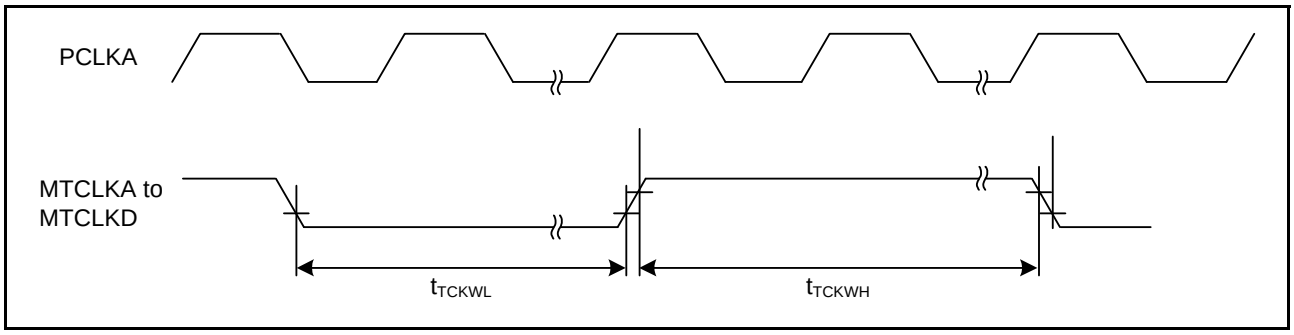

Figure 5.22 MTU3 Clock Input Timing

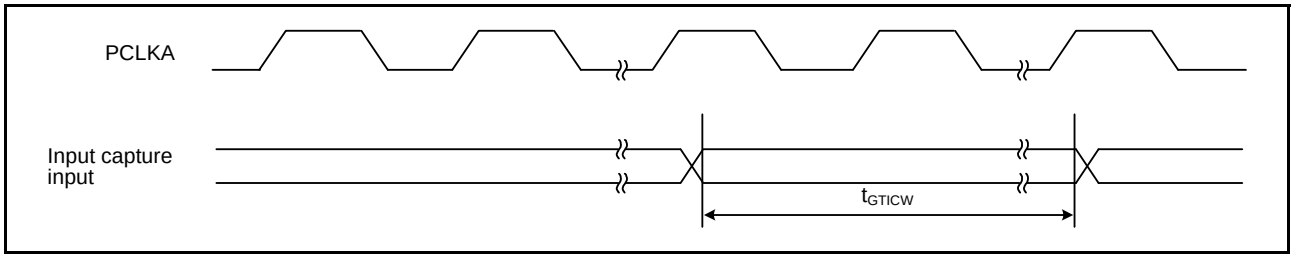

Figure 5.23 GPT Input Capture Input Timing

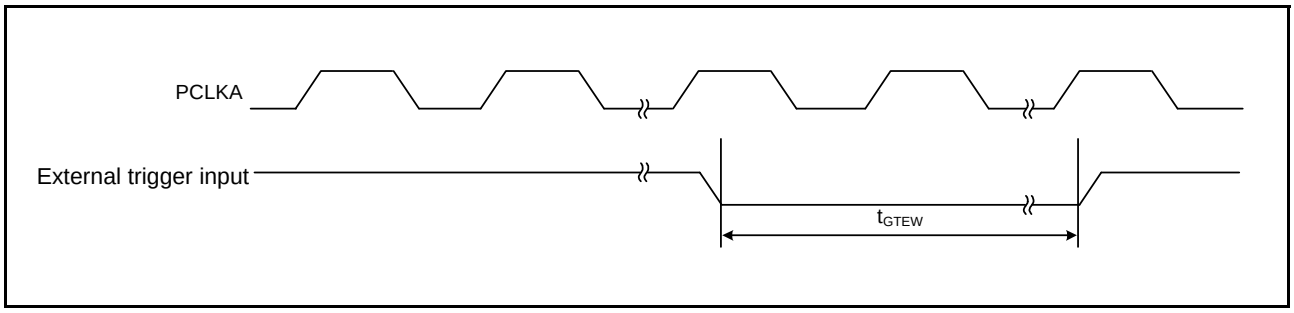

Figure 5.24 GPT External Trigger Input Timing

Downloaded from Arrow.com.

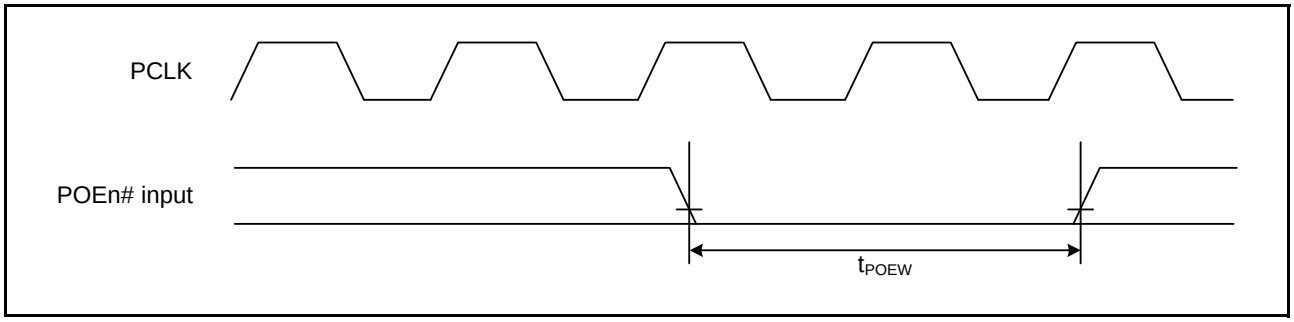

Figure 5.25 POE3# Input Timing

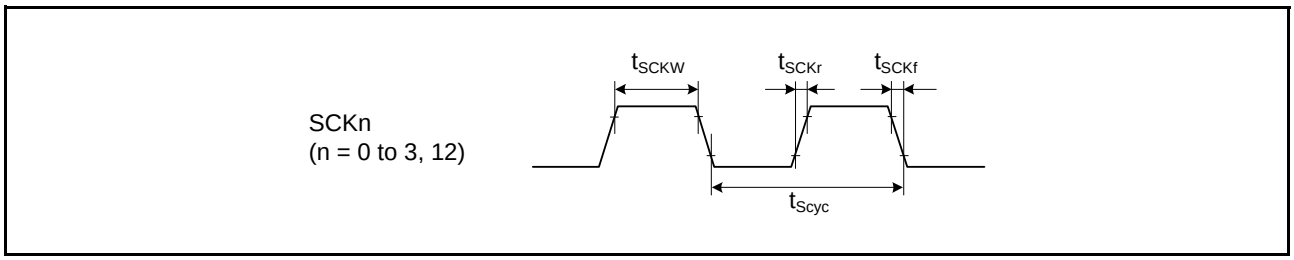

Figure 5.26 SCK Clock Input Timing

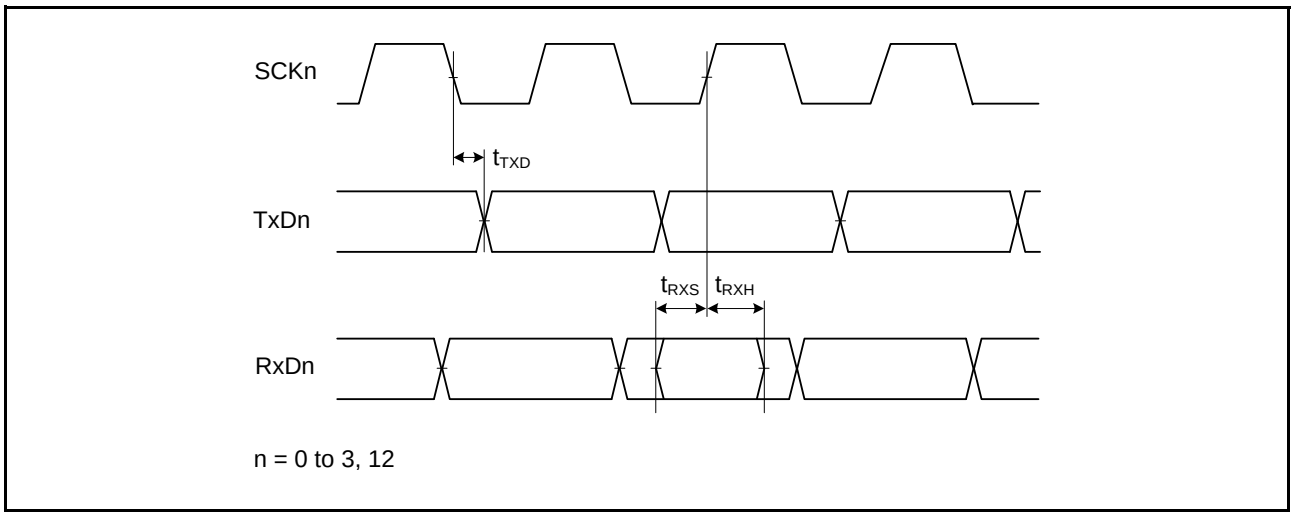

Figure 5.27 SCI Input/Output Timing: Clock Synchronous Mode

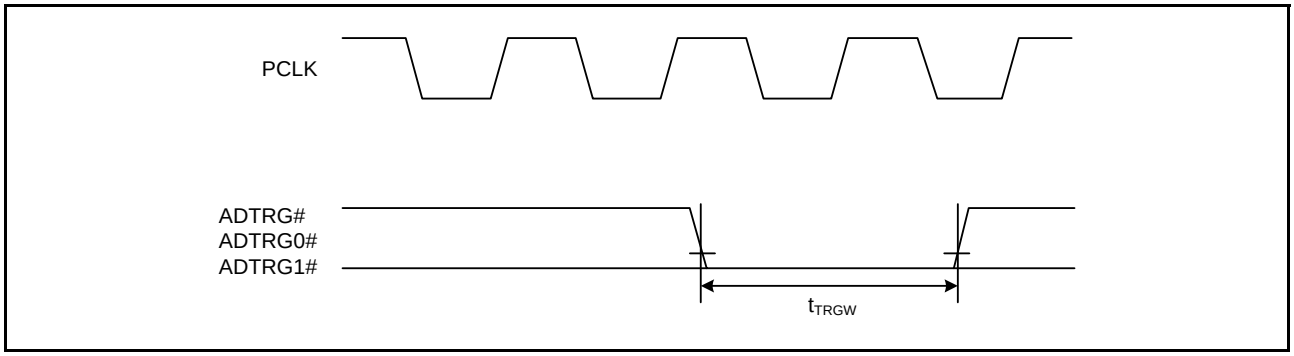

Figure 5.28 AD Converter External Trigger Input Timing

Downloaded from Arrow.com.

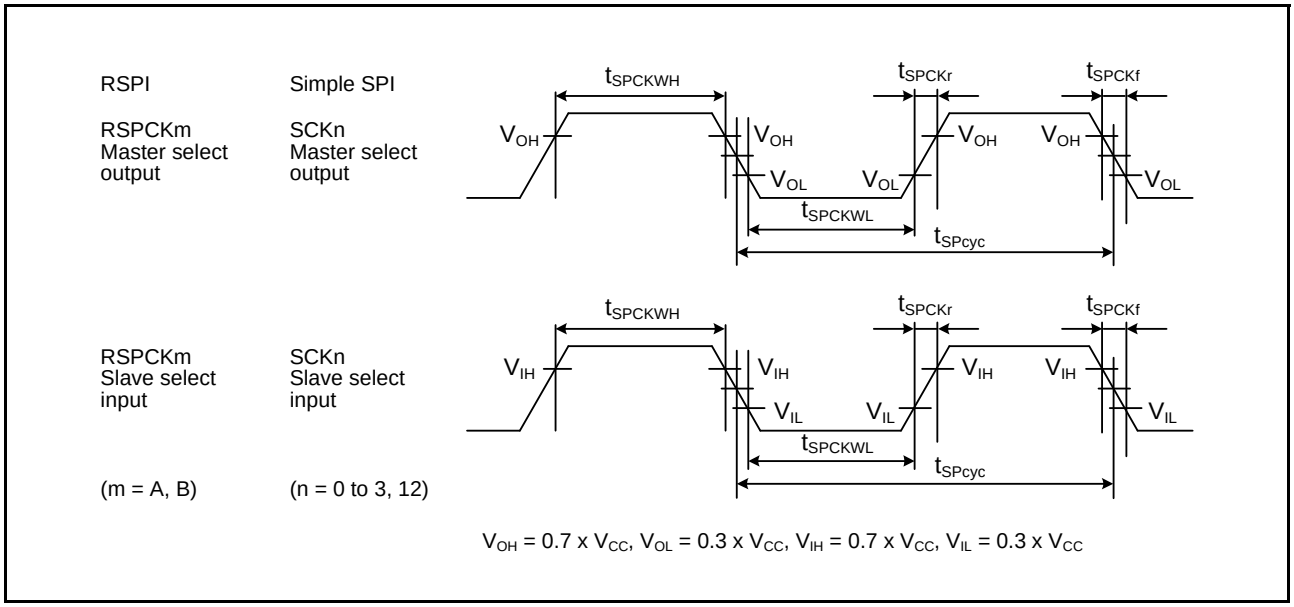

Figure 5.29 RSPI Clock Timing and Simple SPI Clock Timing

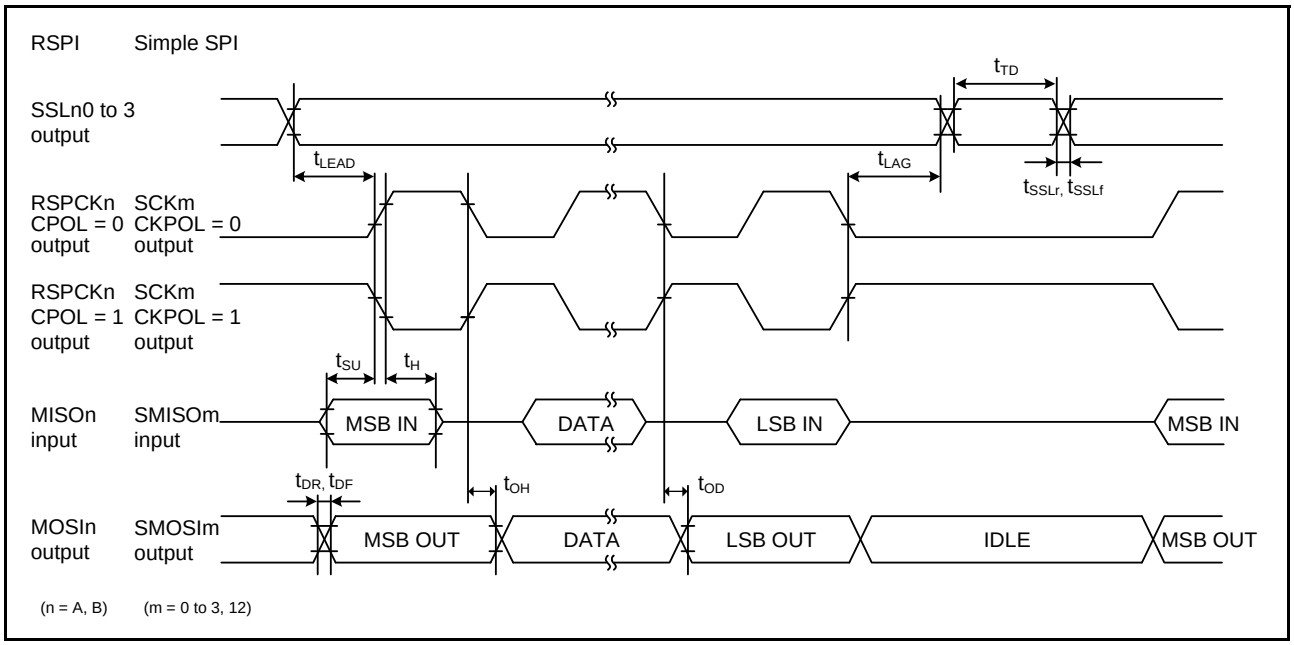

Figure 5.30 RSPI Timing (Master, CPHA = 0) (Bit Rate: PCLKB Division Ratio Set to a Value Other Than 1/2) and Simple SPI Timing (Master, CKPH = 1)

Downloaded from Arrow.com.

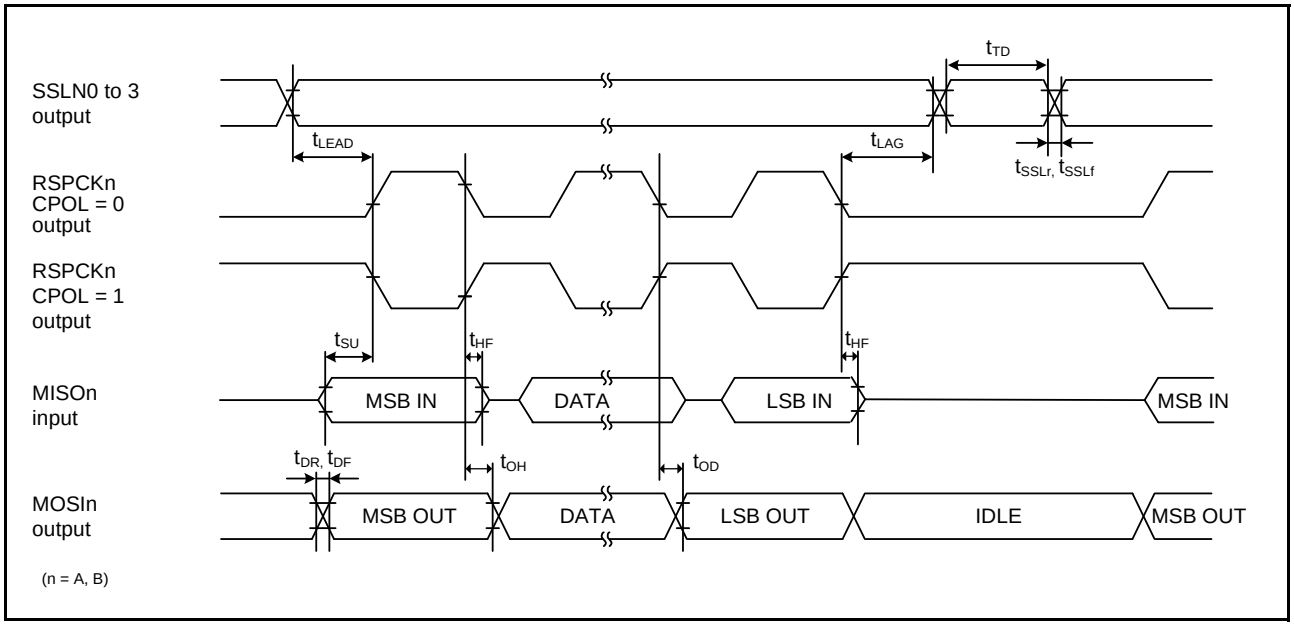

Figure 5.31 RSPI Timing (Master, CPHA = 1) (Bit Rate: PCLKB Division Ratio Set to 1/2)

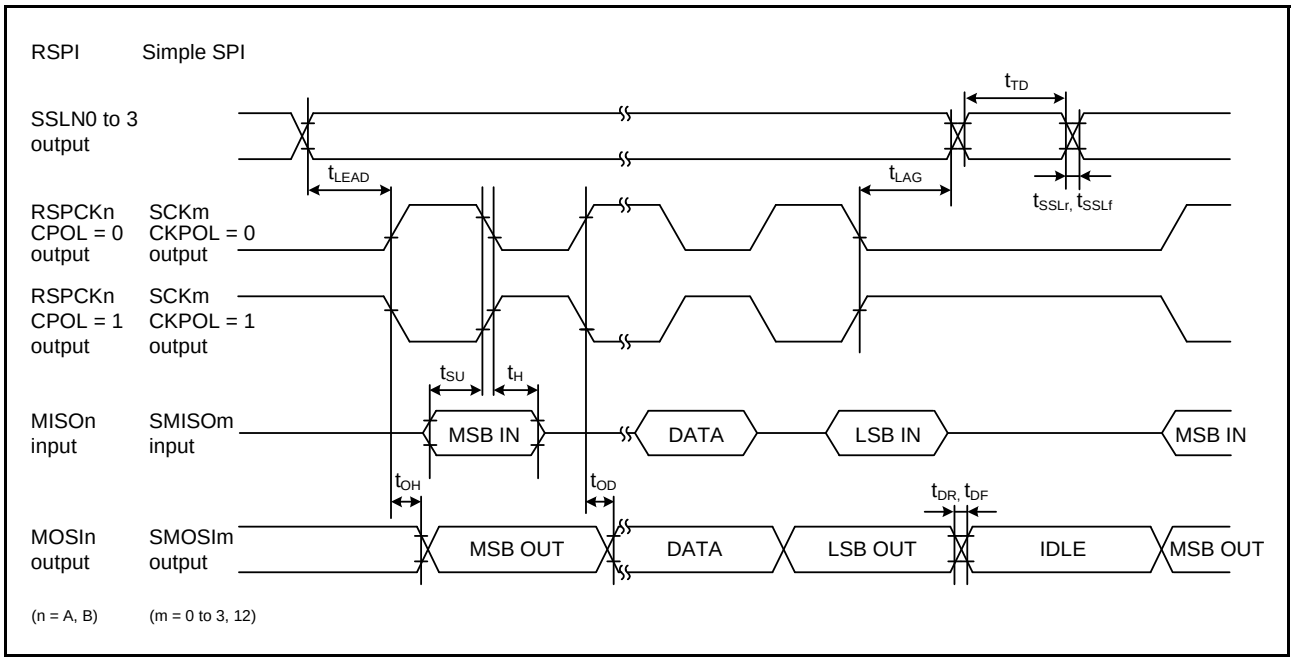

Figure 5.32 RSPI Timing (Master, CPHA = 1) (Bit Rate: PCLKB Division Ratio Set to a Value Other Than 1/2) and Simple SPI Timing (Master, CKPH = 0)

Downloaded from Arrow.com.

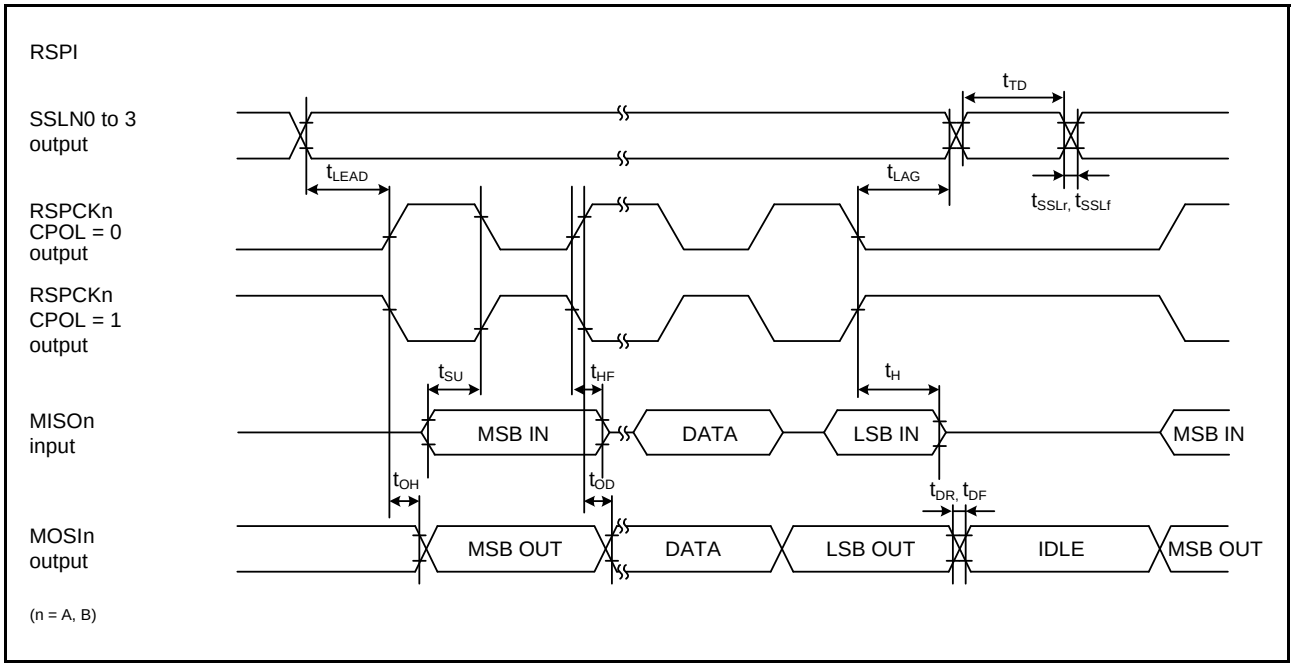

Figure 5.33 RSPI Timing (Master, CPHA = 1) (Bit Rate: PCLKB Division Ratio Set to 1/2)

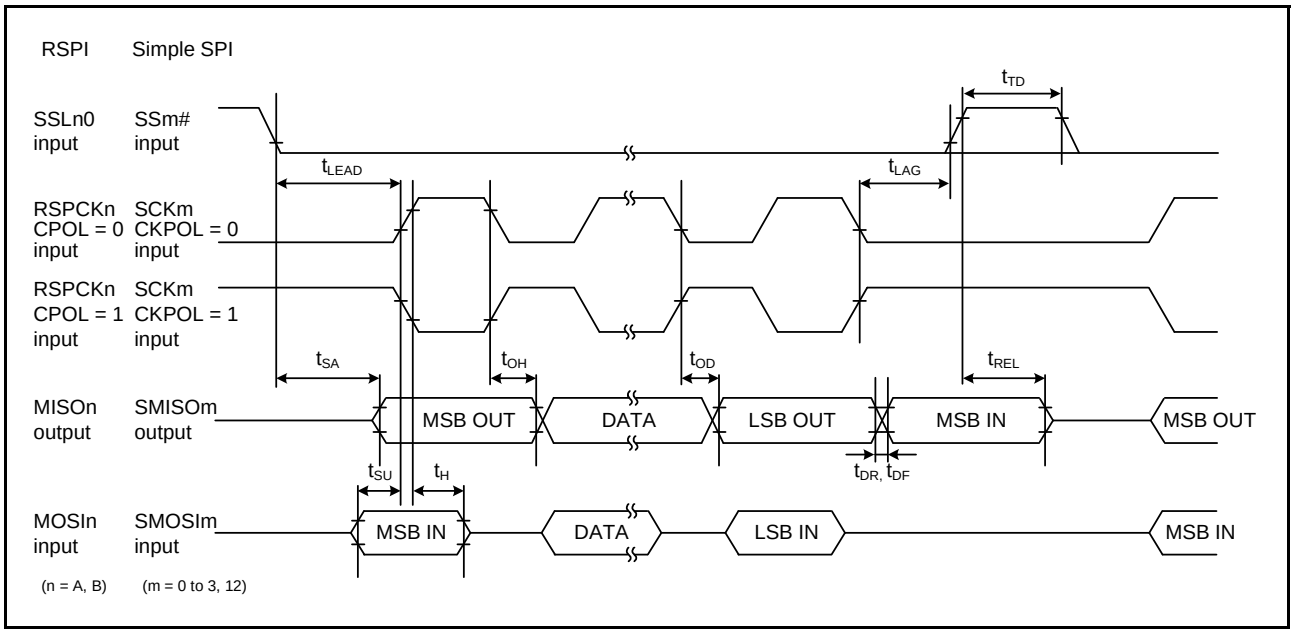

Figure 5.34 RSPI Timing (Slave, CPHA = 0) and Simple SPI Timing (Slave, CKPH = 1)

Downloaded from Arrow.com.

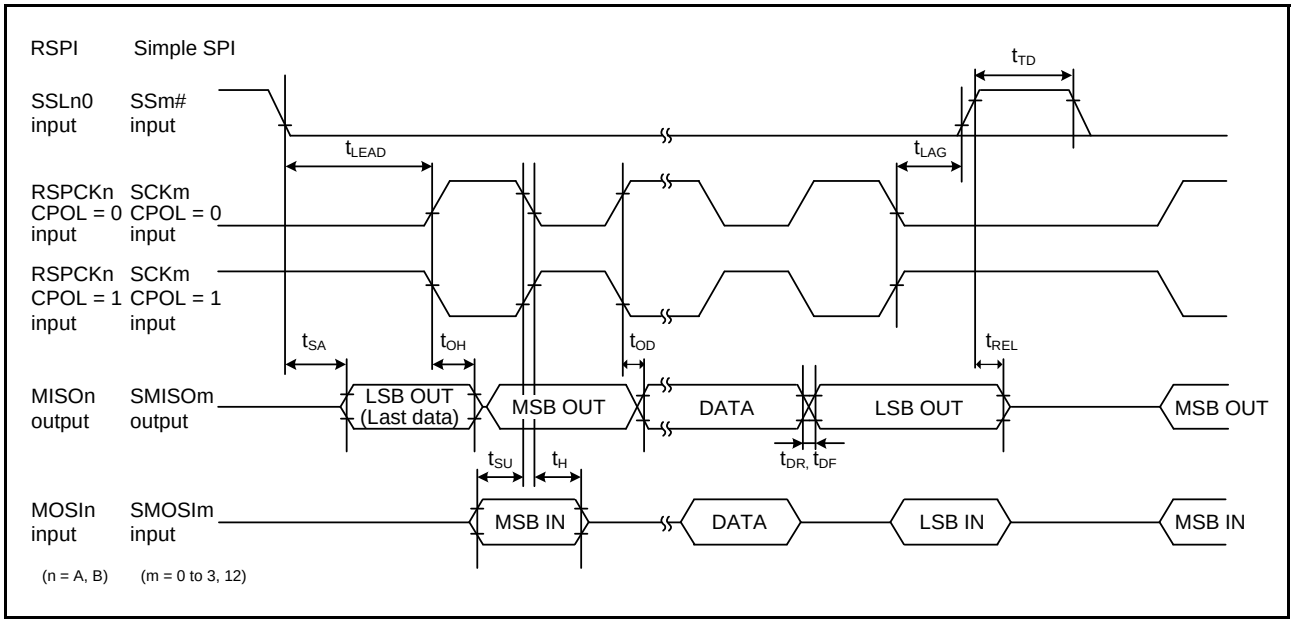

Figure 5.35 RSPI Timing (Slave, CPHA = 1) and Simple SPI Timing (Slave, CKPH = 0)

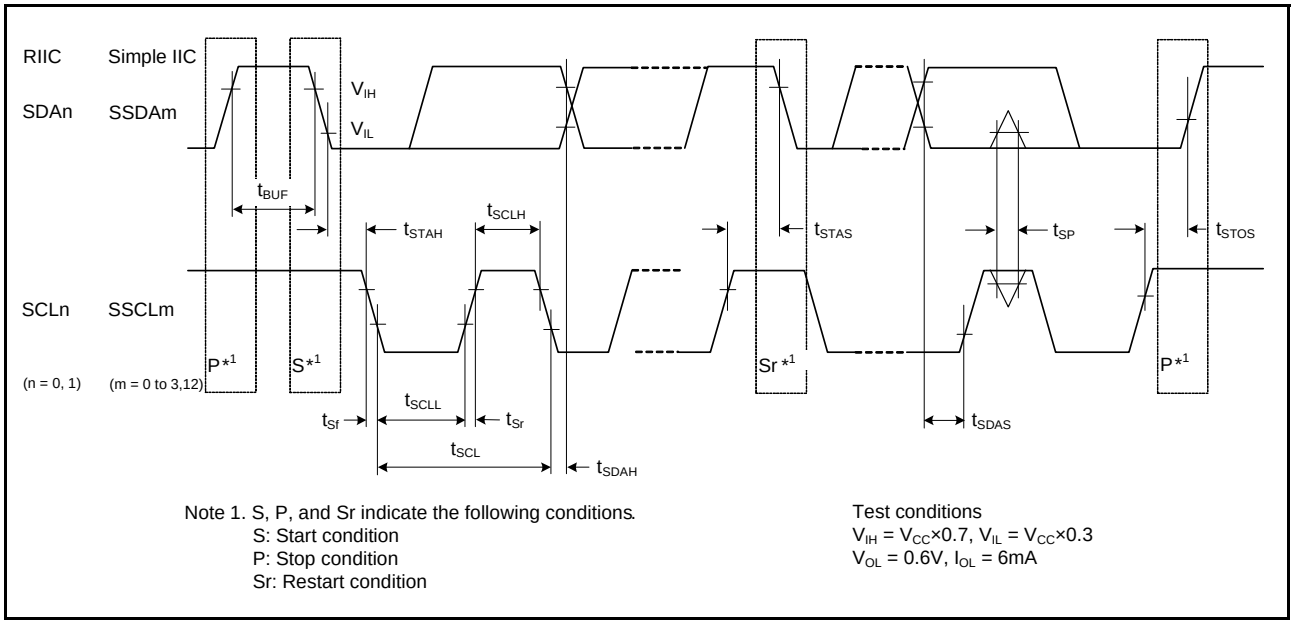

Figure 5.36 RIIC Bus Interface Input/Output Timing and Simple IIC Bus Interface Input/Output Timing

Downloaded from Arrow.com.

5.4 USB Characteristics

Table 5.18 On-Chip USB Full-Speed Characteristics (DP and DM Pin Characteristics)

Note: Common standard values for conditions not given in the table are listed as “Condition 1” to “Condition 3” below.

Condition 1: VCC = PLLVCC = VCC_USB = 3.0 to 3.6 V, VSS = PLLVSS = VSS_USB = AVSS0 = AVSS = VREFL0 = 0 V
AVCC0 = AVCC = VREF = 3.0 to 3.6 V, VREFH0 = 3.0 V to AVCC0

Condition 2: VCC = PLLVCC = VCC_USB = 3.0 to 3.6 V, VSS = PLLVSS = VSS_USB = AVSS0 = AVSS = VREFL0 = 0 V
AVCC0 = AVCC = VREF = 4.0 to 5.5 V, VREFH0 = 4.0 V to AVCC0

Condition 3: VCC = PLLVCC = 4.0 to 5.5 V, VCC_USB = 3.0 to 3.6 V, VSS = PLLVSS = VSS_USB = AVSS0 = AVSS = VREFL0 = 0 V
AVCC0 = AVCC = VREF = 4.0 to 5.5 V, VREFH0 = 4.0 V to AVCC0

$T_a = T_{opr}$. T_a is common to conditions 1 to 3.

Item		Symbol	Min.	Max.	Unit	Test Conditions	
Input characteristics	Input high level voltage	V_{IH}	2.0	—	V		Figure 5.37 Figure 5.38
	Input low level voltage	V_{IL}	—	0.8	V		
	Differential input sensitivity	V_{DI}	0.2	—	V	| DP – DM |	
	Differential common mode range	V_{CM}	0.8	2.5	V		
Output characteristics	Output high level voltage	V_{OH}	2.8	3.6	V	I_{OH} = –200 µA	
	Output low level voltage	V_{OL}	0.0	0.3	V	I_{OL} = 2 mA	
	Cross-over voltage	V_{CRS}	1.3	2.0	V		
	Rise time	t_{Lr}	4	20	ns		
	Fall time	t_{Lf}	4	20	ns		
	Rise/fall time ratio	t_{Lr} / t_{Lf}	90	111.11	%	t_{Lr} / t_{Lf}	
	Output resistance	Z_{DRV}	28	44	Ω	Rs = 24 Ω included	

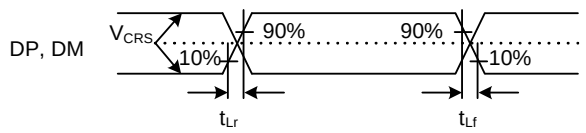

Figure 5.37 DP and DM Output Timing (Full-Speed)

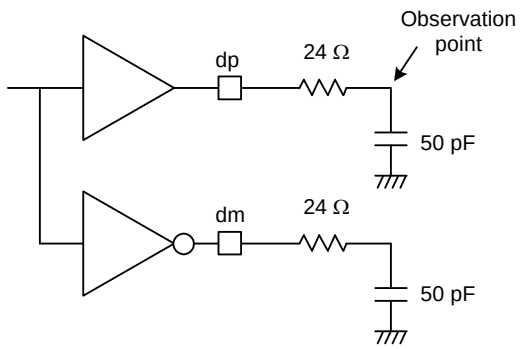

Figure 5.38 Test Circuit (Full-Speed)

Downloaded from Arrow.com.

5.5 A/D Conversion Characteristics

Table 5.19 10-Bit A/D Conversion Characteristics (1)

Note: Common standard values for conditions not given in the table are listed as “Condition 1” to “Condition 3” below.

Condition 1: VCC = PLLVCC = VCC_USB = 2.7 to 3.6 V, VSS = PLLVSS = VSS_USB = AVSS0 = AVSS = VREFL0 = 0 V
AVCC0 = AVCC = VREF = 3.0 to 3.6 V, VREFH0 = 3.0 V to AVCC0

Condition 2: VCC = PLLVCC = VCC_USB = 2.7 to 3.6 V, VSS = PLLVSS = VSS_USB = AVSS0 = AVSS = VREFL0 = 0 V
AVCC0 = AVCC = VREF = 4.0 to 5.5 V, VREFH0 = 4.0 V to AVCC0

Condition 3: VCC = PLLVCC = 4.0 to 5.5 V, VCC_USB = 3.0 to 3.6 V, VSS = PLLVSS = VSS_USB = AVSS0 = AVSS = VREFL0 = 0 V
AVCC0 = AVCC = VREF = 4.0 to 5.5 V, VREFH0 = 4.0 V to AVCC0

$T_a = T_{opr}$. T_a is common to conditions 1 to 3.

Item			Min.	Typ.	Max.	Unit	Test Conditions
Resolution			10	10	10	Bit	
Conversion time*1 (Operation at ADCLK = 100 MHz)	With 0.1-µF external capacitor	AN0 to AN7	0.5	—	—	µs	Sampling in 25 states
		Other channels	0.75	—	—	µs	Sampling in 50 states
	Without 0.1-µF external capacitor Permissible signal source impedance (max.) = 1 kΩ	AN0 to AN7	0.6	—	—	µs	Sampling in 35 states
		Other channels	0.75	—	—	µs	Sampling in 50 states
Analog input capacitance			—	—	6	pF	
Integral nonlinearity error			—	—	±3.0	LSB	
Offset error			—	—	±2.0	LSB	
Full-scale error			—	—	±3.0	LSB	
Quantization error			—	±0.5	—	LSB	
Absolute accuracy			—	—	±6.0	LSB	

Note 1. The conversion time includes the sampling time and the comparison time. As the test conditions, the number of sampling states is indicated.

Downloaded from Arrow.com.

Table 5.20 10-Bit A/D Conversion Characteristics (2)

Note: Common standard values for conditions not given in the table are listed as “Condition 1” to “Condition 3” below.

Condition 1: VCC = PLLVCC = VCC_USB = 2.7 to 3.6 V, VSS = PLLVSS = VSS_USB = AVSS0 = AVSS = VREFL0 = 0 V
AVCC0 = AVCC = VREF = 3.0 to 3.6 V, VREFH0 = 3.0 V to AVCC0

Condition 2: VCC = PLLVCC = VCC_USB = 2.7 to 3.6 V, VSS = PLLVSS = VSS_USB = AVSS0 = AVSS = VREFL0 = 0 V
AVCC0 = AVCC = VREF = 4.0 to 5.5 V, VREFH0 = 4.0 V to AVCC0

Condition 3: VCC = PLLVCC = 4.0 to 5.5 V, VCC_USB = 3.0 to 3.6 V, VSS = PLLVSS = VSS_USB = AVSS0 = AVSS = VREFL0 = 0 V
AVCC0 = AVCC = VREF = 4.0 to 5.5 V, VREFH0 = 4.0 V to AVCC0

$T_a = T_{opr}$ is common to conditions 1 to 3.

Item			Min.	Typ.	Max.	Unit	Test Conditions
Resolution			10	10	10	Bit	
Conversion time*1 (Operation at ADCLK = 50 MHz)	Without 0.1-μF external capacitor Permissible signal source impedance (max.) = 1 kΩ	AN0 to AN7	0.8	—	—	μs	Sampling in 15 states
		Other channels	1.0	—	—	μs	Sampling in 25 states
Analog input capacitance			—	—	6	pF	
Integral nonlinearity error			—	—	±2.0	LSB	
Offset error			—	—	±2.0	LSB	
Full-scale error			—	—	±3.0	LSB	
Quantization error			—	±0.5	—	LSB	
Absolute accuracy			—	—	±4.0	LSB	

Note 1. The conversion time includes the sampling time and the comparison time. As the test conditions, the number of sampling states is indicated.

Downloaded from Arrow.com.

Table 5.21 12-Bit A/D Conversion Characteristics (1)

Condition 1: VCC = PLLVCC = VCC_USB = 2.7 to 3.6 V, VSS = PLLVSS = VSS_USB = AVSS0 = AVSS = VREFL0 = 0 V
AVCC0 = AVCC = VREF = 3.0 to 3.6 V, VREFH0 = 3.0 V to AVCC0

$T_a = T_{opr}$

Item		Min.	Typ.	Max.	Unit	Test Conditions
Resolution		12	12	12	Bit	
Conversion time*1 (ADCLK = 25 MHz)	Without 0.1-µF external capacitor Permissible signal source impedance (max.) = 1.0 kΩ	2.0	—	—	µs	Sampling in 20 states
Analog input capacitance		—	—	8	pF	
Sample and hold circuit in use	Integral nonlinearity error	—	—	±4.0	LSB	AVin = 0.25 to AV_{REFH}–0.25
	Offset error	—	—	±4.0	LSB	
	Full-scale error	—	—	±4.0	LSB	
	Quantization error	—	±0.5	—	LSB	
	Absolute accuracy	—	—	±8.0	LSB	
Sample and hold circuit not in use	Integral nonlinearity error	—	—	±3.0	LSB	AVin = AV_{REFL} to AV_{REFH}
	Offset error	—	—	±3.0	LSB	
	Full-scale error	—	—	±3.0	LSB	
	Quantization error	—	±0.5	—	LSB	
	Absolute accuracy	—	—	±6.0	LSB	

Note 1. The conversion time includes the sampling time and the comparison time. As the test conditions, the number of sampling states is indicated.

Table 5.22 12-Bit A/D Conversion Characteristics (2)

Note: Common standard values for conditions not given in the table are listed as “Condition 1” and “Condition 2” below.

Condition 1: VCC = PLLVCC = VCC_USB = 2.7 to 3.6 V, VSS = PLLVSS = VSS_USB = AVSS0 = AVSS = VREFL0 = 0 V
AVCC0 = AVCC = VREF = 4.0 to 5.5 V, VREFH0 = 4.0 V to AVCC0

Condition 2: VCC = PLLVCC = 4.0 to 5.5 V, VCC_USB = 3.0 to 3.6 V, VSS = PLLVSS = VSS_USB = AVSS0 = AVSS = VREFL0 = 0 V
AVCC0 = AVCC = VREF = 4.0 to 5.5 V, VREFH0 = 4.0 V to AVCC0

$T_a = T_{opr}$. T_a is common to conditions 2 and 3.

Item		Min.	Typ.	Max.	Unit	Test Conditions
Resolution		12	12	12	Bit	
Conversion time*1 (ADCLK = 50 MHz)	Without 0.1-µF external capacitor Permissible signal source impedance (max.) = 1.0 kΩ	1.0	—	—	µs	Sampling in 20 states
Analog input capacitance		—	—	6	pF	
Sample and hold circuit in use	Integral nonlinearity error	—	—	±6.0	LSB	AVin = 0.25 to AV_{REFH}–0.25
	Offset error	—	—	±6.0	LSB	
	Full-scale error	—	—	±6.0	LSB	
	Quantization error	—	±0.5	—	LSB	
	Absolute accuracy	—	—	±8.0	LSB	
Sample and hold circuit not in use	Integral nonlinearity error	—	—	±3.0	LSB	AVin = AV_{REFL} to AV_{REFH}
	Offset error	—	—	±3.0	LSB	
	Full-scale error	—	—	±3.0	LSB	
	Quantization error	—	±0.5	—	LSB	
	Absolute accuracy	—	—	±6.0	LSB	

Note 1. The conversion time includes the sampling time and the comparison time. As the test conditions, the number of sampling states is indicated.

Downloaded from Arrow.com.

Table 5.23 Characteristics of the Programmable Gain Amplifier

Note: Common standard values for conditions not given in the table are listed as “Condition 1” to “Condition 3” below.

Condition 1: VCC = PLLVCC = VCC_USB = 2.7 to 3.6 V, VSS = PLLVSS = VSS_USB = AVSS0 = AVSS = VREFL0 = 0 V
AVCC0 = AVCC = VREF = 3.0 to 3.6 V, VREFH0 = 3.0 V to AVCC0

Condition 2: VCC = PLLVCC = VCC_USB = 2.7 to 3.6 V, VSS = PLLVSS = VSS_USB = AVSS0 = AVSS = VREFL0 = 0 V
AVCC0 = AVCC = VREF = 4.0 to 5.5 V, VREFH0 = 4.0 V to AVCC0

Condition 3: VCC = PLLVCC = 4.0 to 5.5 V, VCC_USB = 3.0 to 3.6 V, VSS = PLLVSS = VSS_USB = AVSS0 = AVSS = VREFL0 = 0 V
AVCC0 = AVCC = VREF = 4.0 to 5.5 V, VREFH0 = 4.0 V to AVCC0

$T_a = T_{opr}$. T_a is common to conditions 1 to 3.

Item		Symbol	Min.	Typ.	Max.	Unit	Test Conditions
Analog input capacitance		C_{in}	—	—	8	pF	
Input offset voltage		V_{off}	—	—	8	mV	
Input voltage range (V_{in})	Gain × 2.000	V_{in}	0.050 × AVcc	—	0.450 × AVcc	V	
	Gain × 2.500		0.047 × AVcc		0.360 × AVcc		
	Gain × 3.077		0.045 × AVcc		0.292 × AVcc		
	Gain × 3.636		0.042 × AVcc		0.247 × AVcc		
	Gain × 4.000		0.040 × AVcc		0.212 × AVcc		
	Gain × 4.444		0.036 × AVcc		0.191 × AVcc		
	Gain × 5.000		0.033 × AVcc		0.170 × AVcc		
	Gain × 5.714		0.031 × AVcc		0.148 × AVcc		
	Gain × 6.667		0.029 × AVcc		0.127 × AVcc		
	Gain × 10.000		0.025 × AVcc		0.08 × AVcc		
	Gain × 13.333		0.023 × AVcc	—	0.06 × AVcc		
Slew rate		SR	10	—	—	V/μs	
Gain error	Gain × 2.000	—	—	—	1	%	
	Gain × 2.500		—	—	1		
	Gain × 3.077		—	—	1		
	Gain × 3.636		—	—	1.5		
	Gain × 4.000		—	—	1.5		
	Gain × 4.444		—	—	2		
	Gain × 5.000		—	—	2		
	Gain × 5.714		—	—	2		
	Gain × 6.667		—	—	3		
	Gain × 10.000		—	—	4		
	Gain × 13.333		—	—	4		

Downloaded from Arrow.com.

Table 5.24 Comparator Characteristics

Note: Common standard values for conditions not given in the table are listed as “Condition 1” to “Condition 3” below.

Condition 1: VCC = PLLVCC = VCC_USB = 2.7 to 3.6 V, VSS = PLLVSS = VSS_USB = AVSS0 = AVSS = VREFL0 = 0 V
AVCC0 = AVCC = VREF = 3.0 to 3.6 V, VREFH0 = 3.0 V to AVCC0

Condition 2: VCC = PLLVCC = VCC_USB = 2.7 to 3.6 V, VSS = PLLVSS = VSS_USB = AVSS0 = AVSS = VREFL0 = 0 V
AVCC0 = AVCC = VREF = 4.0 to 5.5 V, VREFH0 = 4.0 V to AVCC0

Condition 3: VCC = PLLVCC = 4.0 to 5.5 V, VCC_USB = 3.0 to 3.6 V, VSS = PLLVSS = VSS_USB = AVSS0 = AVSS = VREFL0 = 0 V
AVCC0 = AVCC = VREF = 4.0 to 5.5 V, VREFH0 = 4.0 V to AVCC0

$T_a = T_{opr}$. T_a is common to conditions 1 to 3.

Item	Symbol	Min.	Typ.	Max.	Unit	Test Conditions
Analog input capacitance	C_{in}	—	—	8	pF	
REFH pin offset voltage	V_{off}	—	—	5	mV	
REFL pin offset voltage		—	—	5	mV	
REFH input voltage range	V_{in}	1.7	—	AVcc – 0.3	V	
REFL input voltage range		0.3	—	AVcc – 1.7	V	
REFH reply time	t_{CR}	—	—	500	ns	VI = VREF±25mV
REFL reply time	t_{CF}	—	—	500	ns	

Downloaded from Arrow.com.

5.6 D/A Conversion Characteristics

Table 5.25 D/A Conversion Characteristics

Note: Common standard values for conditions not given in the table are listed as “Condition 1” to “Condition 3” below.

Condition 1: VCC = PLLVCC = VCC_USB = 2.7 to 3.6 V, VSS = PLLVSS = VSS_USB = AVSS0 = AVSS = VREFL0 = 0 V
AVCC0 = AVCC = VREF = 3.0 to 3.6 V, VREFH0 = 3.0 V to AVCC0

Condition 2: VCC = PLLVCC = VCC_USB = 2.7 to 3.6 V, VSS = PLLVSS = VSS_USB = AVSS0 = AVSS = VREFL0 = 0V
AVCC0 = AVCC = VREF = 4.0 to 5.5 V, VREFH0 = 4.0 V to AVCC0

Condition 3: VCC = PLLVCC = 4.0 to 5.5 V, VCC_USB = 3.0 to 3.6 V, VSS = PLLVSS = VSS_USB = AVSS0 = AVSS = VREFL0 = 0 V
AVCC0 = AVCC = VREF = 4.0 to 5.5 V, VREFH0 = 4.0 V to AVCC0

$T_a = T_{opr}$. T_a is common to conditions 1 to 3.

Item	Min.	Typ.	Max.	Unit	Test Conditions
Resolution	10	10	10	Bit	
Conversion time	—	—	3.0	μs	20-pF capacitive load
Absolute accuracy	—	±2.0	±4.0	LSB	2-MΩ resistive load
	—	—	±3.0	LSB	4-MΩ resistive load
	—	—	±2.0	LSB	10-MΩ resistive load
RO output resistance	—	3.6	—	kΩ	

Downloaded from Arrow.com.

5.7 Power-on Reset Circuit and Voltage Detection Circuit Characteristics

Table 5.26 Power-on Reset Circuit and Voltage Detection Circuit Characteristics (1)

Note: Common standard values for conditions not given in the table are listed as “Condition 1” and “Condition 2” below.

Condition 1: VCC = PLLVCC = VCC_USB = 2.7 to 3.6 V, VSS = PLLVSS = VSS_USB = AVSS0 = AVSS = VREFL0 = 0 V
AVCC0 = AVCC = VREF = 3.0 to 3.6 V, VREFH0 = 3.0 V to AVCC0

Condition 2: VCC = PLLVCC = VCC_USB = 2.7 to 3.6 V, VSS = PLLVSS = VSS_USB = AVSS0 = AVSS = VREFL0 = 0 V
AVCC0 = AVCC = VREF = 4.0 to 5.5 V, VREFH0 = 4.0 V to AVCC0

$T_a = T_{opr}$. T_a is common to conditions 1 and 2.

Item		Symbol	Min.	Typ.	Max.	Unit	Test Conditions
Voltage detection level	Power-on reset (POR)	V_{POR}	2.46	2.58	2.7	V	Figure 5.41
	Voltage detection circuit (LVD0)	V_{DET0}	2.7	2.82	2.94		Figure 5.42
	Voltage detection circuit (LVD1)*1	V_{DET1_8}	2.75	2.90	3.05		Figure 5.43
		V_{DET1_9}	2.70	2.85	3.00		
		V_{DET1_A}	2.73	2.88	3.03		
	Voltage detection circuit (LVD2)*2	V_{DET2_8}	2.75	2.9	3.05		Figure 5.44
		V_{DET2_9}	2.70	2.85	3.00		
		V_{DET2_A}	2.73	2.88	3.03		
Internal reset time	Power-on reset (POR)	t_{POR}		9.7		ms	Figure 5.41
	Voltage detection circuit (LVD0)	t_{LVD0}		9.7			Figure 5.42
	Voltage detection circuit (LVD1)	t_{LVD1}		0.9			Figure 5.43
	Voltage detection circuit (LVD2)	t_{LVD2}		0.9			Figure 5.44
Minimum VCC down time*3		t_{VOFF}	200	—	—	μs	Figure 5.41 and Figure 5.42
Response delay time		t_{DET}			200	μs	
LVD operation stabilization time (after LVD is enabled)		$Td_{(E-A)}$			3	μs	Figure 5.41 to Figure 5.44
Hysteresis width (LVD1 and LVD2)		V_{LVH}		80		mV	

Note 1. # in symbol $V_{DET1_\#}$ indicates the value of the LVDLVLR.LVD1LVL[3:0] bits.
Note 2. # in symbol $V_{DET2_\#}$ indicates the value of the LVDLVLR.LVD2LVL[3:0] bits.
Note 3. The minimum VCC down time indicates the time when VCC is below the minimum value of voltage detection levels V_{POR}, V_{DET1}, and V_{DET2} for the POR/ LVD.

Downloaded from Arrow.com.

Table 5.27 Power-on Reset Circuit and Voltage Detection Circuit Characteristics (2)

Condition: VCC = PLLVCC = 4.0 to 5.5 V, VCC_USB = 3.0 to 3.6 V, VSS = PLLVSS = VSS_USB = AVSS0 = AVSS = VREFL0 = 0 V
AVCC0 = AVCC = VREF = 4.0 to 5.5 V, VREFH0 = 4.0 V to AVCC0
$T_a = T_{opr}$

Item		Symbol	Min.	Typ.	Max.	Unit	Test Conditions
Voltage detection level	Power-on reset (POR)	V_{POR}	3.6	3.8	4.0	V	Figure 5.41
	Voltage detection circuit (LVD0)	V_{DET0}	4.0	4.2	4.4		Figure 5.42
	Voltage detection circuit (LVD1)*1	V_{DET1_8}	4.59	4.77	4.95		Figure 5.43
		V_{DET1_9}	4.05	4.23	4.41		
		V_{DET1_A}	4.32	4.50	4.68		
	Voltage detection circuit (LVD2)*2	V_{DET2_8}	4.59	4.77	4.95		Figure 5.44
		V_{DET2_9}	4.05	4.23	4.41		
		V_{DET2_A}	4.32	4.50	4.68		
Internal reset time	Power-on reset (POR)	t_{POR}		9.7		ms	Figure 5.41
	Voltage detection circuit (LVD0)	t_{LVD0}		9.7			Figure 5.42
	Voltage detection circuit (LVD1)	t_{LVD1}		0.9			Figure 5.43
	Voltage detection circuit (LVD2)	t_{LVD2}		0.9			Figure 5.44
Minimum VCC down time*3		t_{VOFF}	200	—	—	μs	Figure 5.41 to Figure 5.44
Response delay time		t_{DET}			200	μs	
LVD operation stabilization time (after LVD is enabled)		$Td_{(E-A)}$			3	μs	Figure 5.41 to Figure 5.44
Hysteresis width (LVD1 and LVD2)		V_{LVH}		80		mV	

Note 1. # in symbol $V_{DET1_\#}$ indicates the value of the LVDLVLR.LVD1LVL[3:0] bits.
Note 2. # in symbol $V_{DET2_\#}$ indicates the value of the LVDLVLR.LVD2LVL[3:0] bits.
Note 3. The minimum VCC down time indicates the time when VCC is below the minimum value of voltage detection levels V_{POR}, V_{DET1}, and V_{DET2} for the POR/ LVD.

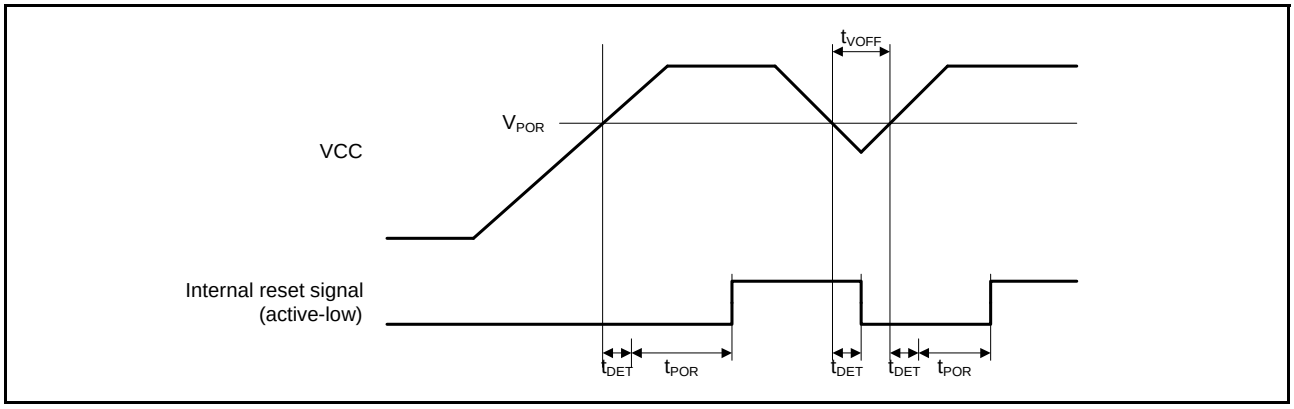

Figure 5.39 Power-on Reset Timing

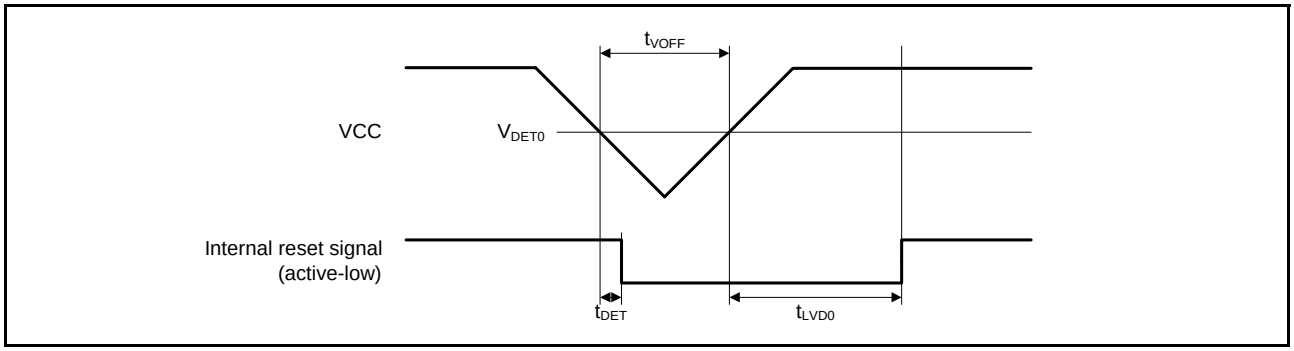

Figure 5.40 Voltage Detection Circuit Timing (V_{DET0})

Downloaded from Arrow.com.

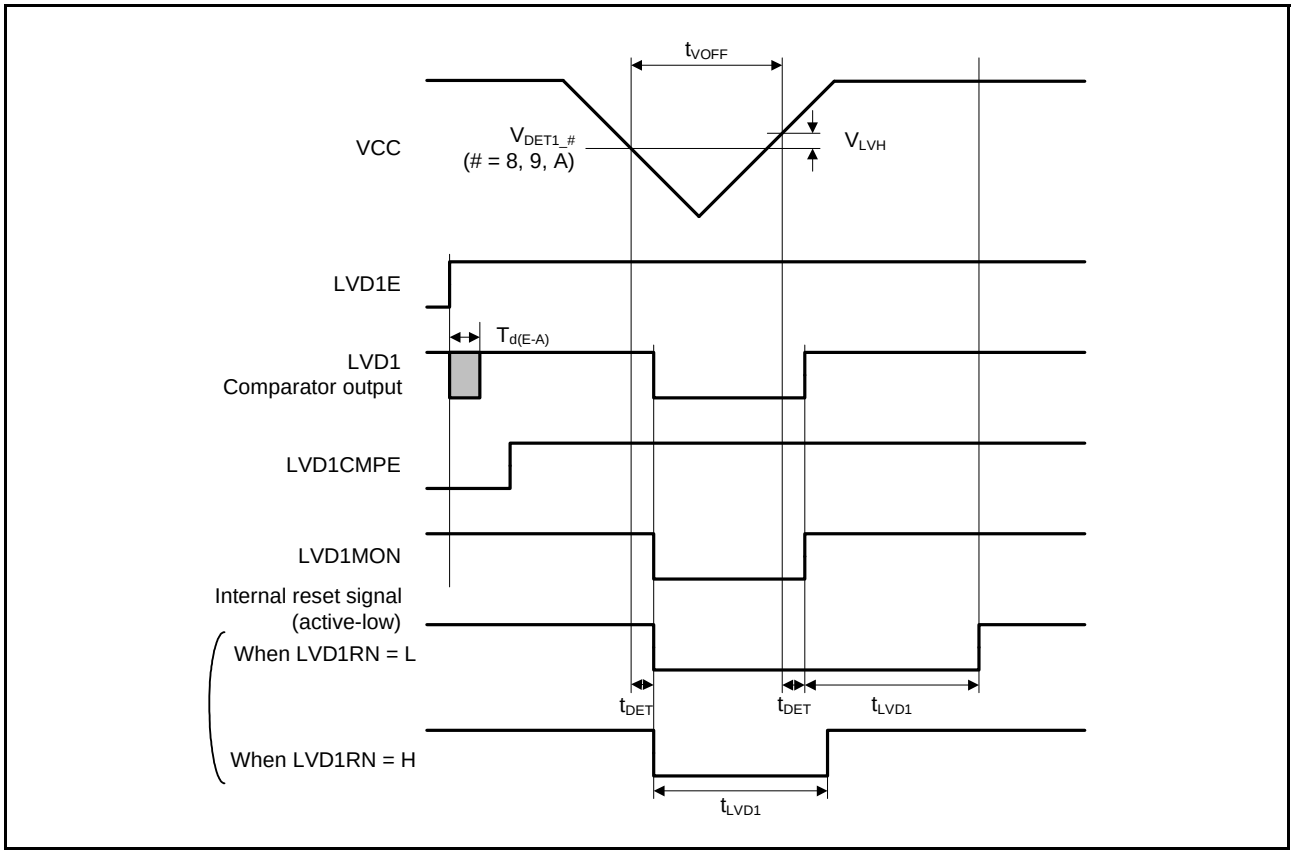

Figure 5.41 Voltage Detection Circuit Timing (V_{DET1})

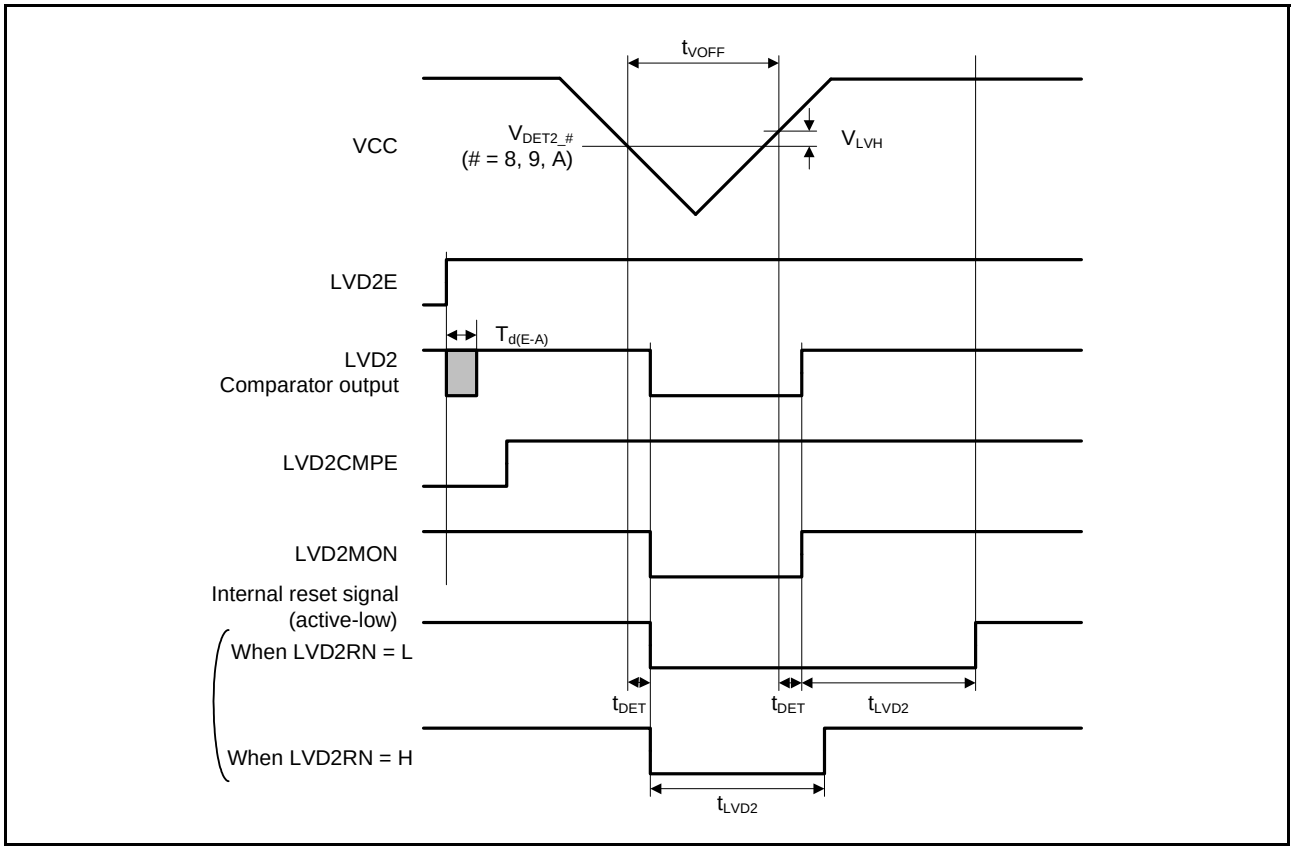

Figure 5.42 Voltage Detection Circuit Timing (V_{DET2})

Downloaded from Arrow.com.

5.8 Oscillation Stop Detection Circuit Characteristics

Table 5.28 Oscillation Stop Detection Circuit Characteristics

Note: Common standard values for conditions not given in the table are listed as “Condition 1” to “Condition 3” below.

Condition 1: VCC = PLLVCC = VCC_USB = 2.7 to 3.6 V, VSS = PLLVSS = VSS_USB = AVSS0 = AVSS = VREFL0 = 0 V
AVCC0 = AVCC = VREF = 3.0 to 3.6 V, VREFH0 = 3.0 V to AVCC0

Condition 2: VCC = PLLVCC = VCC_USB = 2.7 to 3.6 V, VSS = PLLVSS = VSS_USB = AVSS0 = AVSS = VREFL0 = 0V
AVCC0 = AVCC = VREF = 4.0 to 5.5 V, VREFH0 = 4.0 V to AVCC0

Condition 3: VCC = PLLVCC = 4.0 to 5.5 V, VCC_USB = 3.0 to 3.6 V, VSS = PLLVSS = VSS_USB = AVSS0 = AVSS = VREFL0 = 0 V
AVCC0 = AVCC = VREF = 4.0 to 5.5 V, VREFH0 = 4.0 V to AVCC0

$T_a = T_{opr}$. T_a is common to conditions 1 to 3.

Item	Symbol	Min.	Typ.	Max.	Unit	Test Conditions
Detection time	t_{dr}	—	—	1.0	ms	Figure 5.43

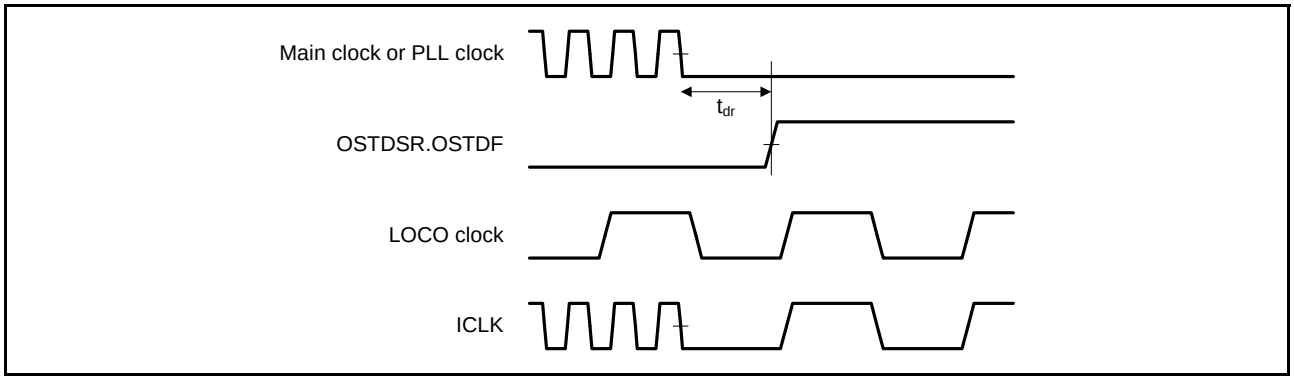

Figure 5.43 Oscillation Stop Detection Timing

Downloaded from Arrow.com.

5.9 ROM (Flash Memory for Code Storage) Characteristics

Table 5.29 ROM (Flash Memory for Code Storage) Characteristics (1)

Condition 1: VCC = PLLVCC = VCC_USB = 2.7 to 3.6 V, VSS = PLLVSS = VSS_USB = AVSS0 = AVSS = VREFL0 = 0 V
AVCC0 = AVCC = VREF = 3.0 to 3.6 V, VREFH0 = 3.0 V to AVCC0

Condition 2: VCC = PLLVCC = VCC_USB = 2.7 to 3.6 V, VSS = PLLVSS = VSS_USB = AVSS0 = AVSS = VREFL0 = 0V
AVCC0 = AVCC = VREF = 4.0 to 5.5 V, VREFH0 = 4.0 V to AVCC0

Condition 3: VCC = PLLVCC = 4.0 to 5.5 V, VCC_USB = 3.0 to 3.6 V, VSS = PLLVSS = VSS_USB = AVSS0 = AVSS = VREFL0 = 0 V
AVCC0 = AVCC = VREF = 4.0 to 5.5 V, VREFH0 = 4.0 V to AVCC0

Temperature range for the programming/erasure operation: $T_a = T_{opr}$. T_a is common to conditions 1 to 3.

Item	Symbol	Min.	Typ.	Max.	Unit	Test Conditions
Reprogram/erase cycle*1	N_{pec}	1000	—	—	Times	
Data hold time	t_{DRP}	30*2	—	—	Year	Ta = +85°C

Note 1. Definition of reprogram/erase cycle:
The reprogram/erase cycle is the number of erasing for each block. When the reprogram/erase cycle is n times (n = 1000), erasing can be performed n times for each block. For instance, when 128-byte programming is performed 16 times for different addresses in 2-Kbyte block and then the entire block is erased, the reprogram/erase cycle is counted as one. However, programming the same address for several times as one erasing is not enabled (overwriting is prohibited).

Note 2. The value is obtained from the reliability test.

Table 5.30 ROM (Flash Memory for Code Storage) Characteristics (2)

Note: Common standard values for conditions not given in the table are listed as “Condition 1” to “Condition 3” below.

Condition 1: VCC = PLLVCC = VCC_USB = 2.7 to 3.6 V, VSS = PLLVSS = VSS_USB = AVSS0 = AVSS = VREFL0 = 0 V
AVCC0 = AVCC = VREF = 3.0 to 3.6 V, VREFH0 = 3.0 V to AVCC0,

Condition 2: VCC = PLLVCC = VCC_USB = 2.7 to 3.6 V, VSS = PLLVSS = VSS_USB = AVSS0 = AVSS = VREFL0 = 0 V
AVCC0 = AVCC = VREF = 4.0 to 5.5 V, VREFH0 = 4.0 V to AVCC0

Condition 3: VCC = PLLVCC = 4.0 to 5.5 V, VCC_USB = 3.0 to 3.6 V, VSS = PLLVSS = VSS_USB = AVSS0 = AVSS = VREFL0 = 0 V
AVCC0 = AVCC = VREF = 4.0 to 5.5 V, VREFH0 = 4.0 V to AVCC0

Temperature range for the programming/erasure operation: $T_a = T_{opr}$. T_a is common to conditions 1 to 3.

Item		Symbol	FCLK = 4 MHz			20 MHz ≤ FCLK ≤ 50 MHz			Unit
			Min.	Typ.	Max.	Min.	Typ.	Max.	
Programming time N_{PEC} ≤ 100 times	128 bytes	t_{P128}	—	2.8	28	—	1	10	ms
	4 Kbytes	t_{P4K}	—	63	140	—	23	50	ms
	16 Kbytes	t_{P16K}	—	252	560	—	90	200	ms
Programming time N_{PEC} > 100 times	128 bytes	t_{P128}	—	3.4	33.6	—	1.2	12	ms
	4 Kbytes	t_{P4K}	—	75.6	168	—	27.6	60	ms
	16 Kbytes	t_{P16K}	—	302.4	672	—	108	240	ms
Erasure time N_{PEC} ≤ 100 times	4 Kbytes	t_{E4K}	—	50	120	—	25	60	ms
	16 Kbytes	t_{E16K}	—	200	480	—	100	240	ms
Erasure time N_{PEC} > 100 times	4 Kbytes	t_{E4K}	—	60	144	—	30	72	ms
	16 Kbytes	t_{E16K}	—	240	576	—	120	288	ms
Suspend delay time during programming		t_{SPD}	—	—	400	—	—	120	μs
First suspend delay time during erasing (in suspend priority mode)		t_{SESD1}	—	—	300	—	—	120	μs
Second suspend delay time during erasing (in suspend priority mode)		t_{SESD2}	—	—	1.7	—	—	1.7	ms
Suspend delay time during erasing (in erasure priority mode)		t_{SEED}	—	—	1.7	—	—	1.7	ms
FCU reset time		t_{FCUR}	35	—	—	35	—	—	μs

Downloaded from Arrow.com.

5.10 E^2 Flash Characteristics

Table 5.31 E^2 Flash Characteristics (1)

Condition 1: VCC = PLLVCC = VCC_USB = 2.7 to 3.6 V, VSS = PLLVSS = VSS_USB = AVSS0 = AVSS = VREFL0 = 0 V
AVCC0 = AVCC = VREF = 3.0 to 3.6 V, VREFH0 = 3.0 V to AVCC0

Condition 2: VCC = PLLVCC = VCC_USB = 2.7 to 3.6 V, VSS = PLLVSS = VSS_USB = AVSS0 = AVSS = VREFL0 = 0 V
AVCC0 = AVCC = VREF = 4.0 to 5.5 V, VREFH0 = 4.0 V to AVCC0

Condition 3: VCC = PLLVCC = 4.0 to 5.5 V, VCC_USB = 3.0 to 3.6 V, VSS = PLLVSS = VSS_USB = AVSS0 = AVSS = VREFL0 = 0 V
AVCC0 = AVCC = VREF = 4.0 to 5.5 V, VREFH0 = 4.0 V to AVCC0

Temperature range for the programming/erasure operation: $T_a = T_{opr}$. T_a is common to conditions 1 to 3.

Item	Symbol	Min.	Typ.	Max.	Unit	Test Conditions
Reprogram/erase cycle*1	N_{DPEC}	100000	—	—	Times	
Data hold time	t_{DDRP}	30*2	—	—	Year	Ta = +85°C

Note 1. Definition of reprogram/erase cycle:
The reprogram/erase cycle is the number of erasing for each block. When the reprogram/erase cycle is n times (n = 100000), erasing can be performed n times for each block. For instance, when 128-byte programming is performed 16 times for different addresses in 2-Kbyte block and then the entire block is erased, the reprogram/erase cycle is counted as one. However, programming the same address for several times as one erasing is not enabled (overwriting is prohibited).

Note 2. The value is obtained from the reliability test.

Table 5.32 E^2 Flash Characteristics (2)

Note: Common standard values for conditions not given in the table are listed as “Condition 1” to “Condition 3” below.

Condition 1: VCC = PLLVCC = VCC_USB = 2.7 to 3.6 V, VSS = PLLVSS = VSS_USB = AVSS0 = AVSS = VREFL0 = 0 V
AVCC0 = AVCC = VREF = 3.0 to 3.6 V, VREFH0 = 3.0 V to AVCC0

Condition 2: VCC = PLLVCC = VCC_USB = 2.7 to 3.6 V, VSS = PLLVSS = VSS_USB = AVSS0 = AVSS = VREFL0 = 0 V
AVCC0 = AVCC = VREF = 4.0 to 5.5 V, VREFH0 = 4.0 V to AVCC0

Condition 3: VCC = PLLVCC = 4.0 to 5.5 V, VCC_USB = 3.0 to 3.6 V, VSS = PLLVSS = VSS_USB = AVSS0 = AVSS = VREFL0 = 0 V
AVCC0 = AVCC = VREF = 4.0 to 5.5 V, VREFH0 = 4.0 V to AVCC0

Temperature range for the programming/erasure operation: $T_a = T_{opr}$. T_a is common to conditions 1 to 3.

Item		Symbol	FCLK = 4 MHz			20 MHz ≤ FCLK ≤ 50 MHz			Unit
			Min.	Typ.	Max.	Min.	Typ.	Max.	
Programming time $N_{DPEC} \leq 100$ times	2 bytes	t_{DP2}	—	0.7	6	—	0.25	2	ms
Programming time $N_{DPEC} > 100$ times	2 bytes	t_{DP2}	—	0.7	6	—	0.25	2	ms
Erasure time $N_{DPEC} \leq 100$ times	32 bytes	t_{DE32}	—	4	40	—	2	20	ms
Erasure time $N_{DPEC} > 100$ times	32 bytes	t_{DE32}	—	7	40	—	4	20	ms
Blank check time	2 bytes	t_{DBC2}	—	—	100	—	—	30	μs
Suspend delay time during programming		t_{DSPD}	—	—	250	—	—	120	μs
First suspend delay time during erasing (in suspend priority mode)		t_{DSESD1}	—	—	250	—	—	120	μs
Second suspend delay time during erasing (in suspend priority mode)		t_{DSESD2}	—	—	500	—	—	300	μs
Suspend delay time during erasing (in erasure priority mode)		t_{DSEED}	—	—	500	—	—	300	μs

Downloaded from Arrow.com.

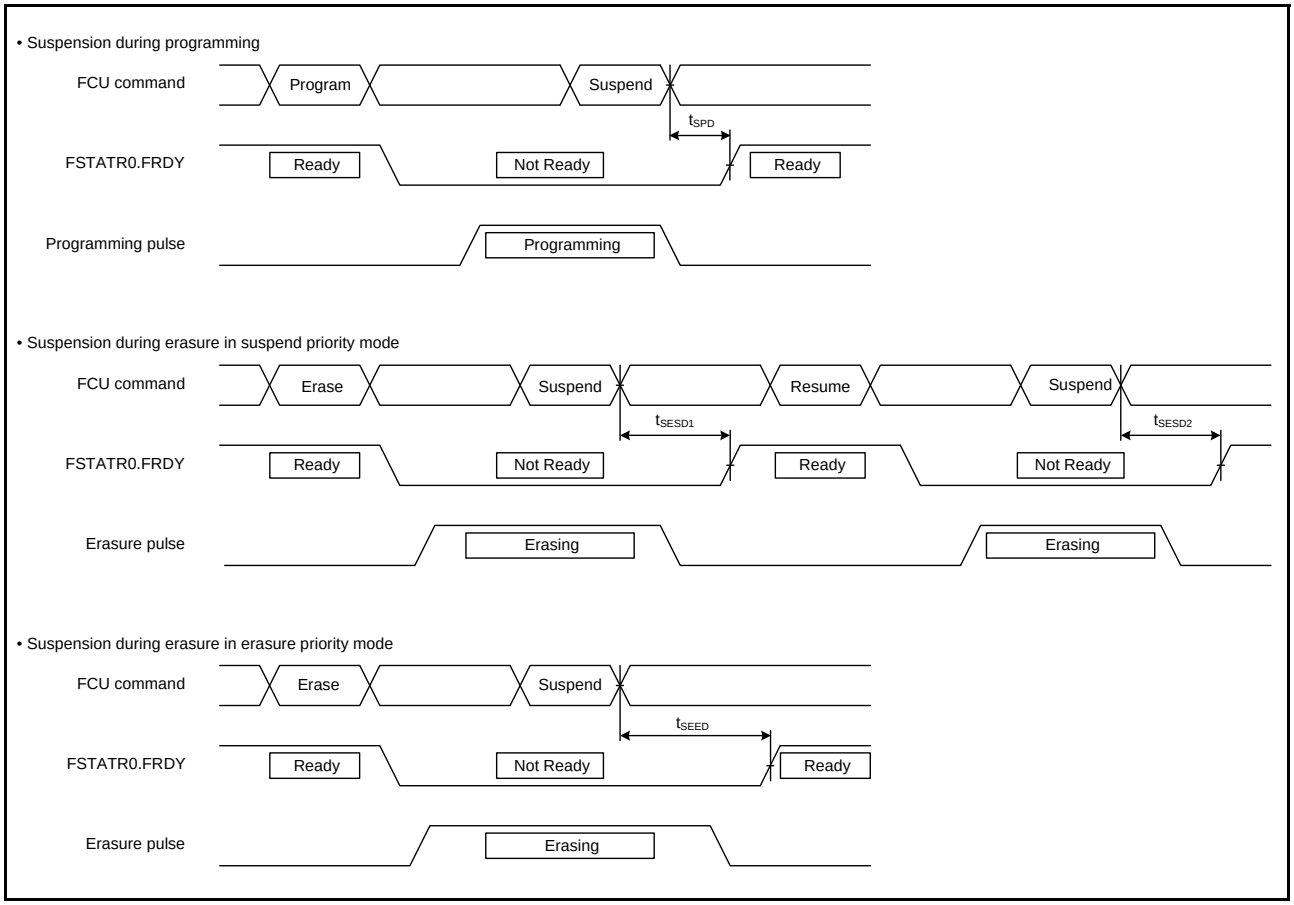

Figure 5.44 Flash Memory Program/Erase Suspend Timing

Downloaded from Arrow.com.

6. Electrical Characteristics [64- and 48-Pin Versions]

6.1 Absolute Maximum Ratings

Table 6.1 Absolute Maximum Ratings

Item		Symbol	Value	Unit
Power supply voltage		VCC	–0.3 to +4.6	V
Input voltage (except for ports for 5 V tolerant*1 and port 4)		Vin	–0.3 to VCC+0.3	V
Input voltage (port 4)		Vin	–0.3 to AVCC0+0.3	V
Input voltage (ports for 5 V tolerant)*1		Vin	–0.3 to +5.8	V
Analog power supply voltage		AVCC0*2	–0.3 to +4.6	V
Reference power supply voltage		VREFH0*2	–0.3 to AVCC0+0.3	V
Analog input voltage (port 4)		V_{AN}	–0.3 to AVCC0+0.3	V
Operating temperature	D version product	Topr	–40 to +85	°C
	G version product	Topr	–40 to +105	°C
Storage temperature		Tstg	–55 to +125	°C

Caution: Permanent damage to the LSI may result if absolute maximum ratings are exceeded.

Note 1. Ports 0, 1, 2, 3, 7, 9, A, B, and D are 5 V tolerant.

Note 2. When the A/D converter is not in use, do not leave the AVCC0, VREFH0, VREFL0, and AVSS0 pins open. Connect the AVCC0 and VREFH0 pins to VCC, and the AVSS0 and VREFL0 pins to VSS, respectively.

Downloaded from Arrow.com.

6.2 DC Characteristics

Table 6.2 DC Characteristics (1)

Conditions: VCC = 2.7 to 3.6 V, VSS = AVSS0 = VREFL0 = 0 V,
AVCC0 = 3.0 to 3.6 V, VREFH0 = 3.0 V to AVCC0,
Ta = T_{opr}

Item		Symbol	Min.	Typ.	Max.	Unit	Test Conditions
Schmitt trigger input voltage	IRQ input pin MTU3 input pin POE3 input pin SCI input pin A/D trigger input pin GPT input pin RES#, NMI	V_{IH}	VCC × 0.8	—	VCC + 0.3	V	
		V_{IL}	–0.3	—	VCC × 0.2		
		ΔV_T	VCC × 0.06	—	—		
	RIIC input pin (IICBus operating)	V_{IH}	VCC × 0.7	—	5.8		
		V_{IL}	–0.3	—	VCC × 0.3		
		ΔV_T	VCC × 0.05	—	—		
	Port 4 (also used as an analog port)	V_{IH}	AVCC0 × 0.8	—	AVCC0 + 0.3		
		V_{IL}	–0.3	—	AVCC0×0.2		
	Ports for 5 V tolerant*1	V_{IH}	VCC × 0.8	—	5.8		
		V_{IL}	–0.3	—	VCC × 0.2		
Input high voltage (except for Schmitt trigger input pin)	MD pin, EMLE	V_{IH}	VCC × 0.9	—	VCC + 0.3		
	EXTAL, TCK, RSPI input pin		VCC × 0.8	—	VCC + 0.3		
	RIIC input pin (SMBus operating)		2.1	—	VCC + 0.3		
Input low voltage (except for Schmitt trigger input pin)	MD pin, EMLE	V_{IL}	–0.3	—	VCC × 0.1		
	EXTAL, TCK, RSPI input pin		–0.3	—	VCC × 0.2		
	RIIC input pin (SMBus operating)		–0.3	—	0.8		
Output high voltage	All output pins	V_{OH}	VCC – 0.5	—	—	V	I_{OH} = –1 mA
Output low voltage	All output pins (except for RIIC pins)	V_{OL}	—	—	0.5	V	I_{OL} = 1.0 mA
	RIIC pins		—	—	0.4		I_{OL} = 3 mA
			—	—	0.6		I_{OL} = 6 mA
Input leakage current	RES#, MD pin, EMLE, Ports 4 and PE2	$\lvert I_{in} \rvert$	—	—	1.0	μA	V_{in} = 0V, V_{in} = VCC
Three-state leakage current (off state)	Ports for 5V tolerant	$\lvert I_{TSI} \rvert$	—	—	1.0	μA	V_{in} = 0V, V_{in} = 5.5 V
			—	—	5.0		
Input capacitance	All input pins (except for ports PB1 and PB2)	C_{in}	—	—	15	pF	V_{in} = 0V, f = 1 MHz, T_a = 25ºC
	Ports PB1 and PB2		—	—	30		

Note 1. Ports 0, 1, 2, 3, 7, 9, A, B, and D are 5 V tolerant.

Downloaded from Arrow.com.

Table 6.3 DC Characteristics (2)

Conditions: VCC = 2.7 to 3.6 V, VSS = AVSS0 = VREFL0 = 0 V,
AVCC0 = 3.0 to 3.6 V, VREFH0 = 3.0 V to AVCC0,
Ta = T_{opr}

Item			Symbol	Min.	Typ.	Max.	Unit	Test Conditions
Supply current*1	During operation	Max. *2	I_{CC}*3	—	—	60	mA	ICLK = 100MHz PCLKA = 100MHz PCLKB = 50MHz PCLKD = 50MHz FCLK = 50MHz
		Normal *4		—	25	—		
		Increased by BGO operation*5		—	15	—		
	Sleep mode				25	35		
	All-module-clock-stop mode*6				14	25		
	During standby	Software standby mode		—	0.2	6	mA	
		Deep software standby mode		—	16	40	μA	
Analog power supply current	During 12-bit A/D conversion (sample & hold circuit in use)		AI_{CC0}	—	3	4	mA	
	During 12-bit A/D conversion (sample & hold circuit not in use)			—	2	3	mA	
	Window comparator (1-channel operation)				0.4	1	mA	
	Window comparator (3-channel operation)			—	0.5	1	mA	
	Waiting for 12-bit AD conversion			—	25	32	μA	
Reference power supply current	During 12-bit A/D conversion		AI_{REFH0}	—	0.6	0.7	mA	
	Waiting for 12-bit A/D conversion			—	0.6	0.7	mA	
VCC rising gradient			SrVcc	—	—	20000	ms/V	

Note 1. Supply current values are with all output pins unloaded.
Note 2. Measured with clocks supplied to the peripheral functions. This does not include the BGO operation.
Note 3. I_{CC} depends on f (ICLK) as follows. (ICLK: PCLK = 8:4)
ICC max = 0.45 × f + 15 (Max)
ICC typ = 0.18 × f + 7 (Normal)
ICC max = 0.22 × f + 13 (sleep mode)
Note 4. Measured with clocks not supplied to the peripheral functions. This does not include the BGO operation.
Note 5. Incremented if data is written to or erased from the on-chip ROM or on-chip data-flash memory for data storage during the program execution.
Note 6. The values are for reference.

Table 6.4 Permissible Output Currents

Conditions: VCC = 2.7 to 3.6 V, VSS = AVSS0 = VREFL0 = 0 V,
AVCC0 = 3.0 to 3.6 V, VREFH0 = 3.0 V to AVCC0,
Ta = T_{opr}

Item	Symbol	Min.	Typ.	Max.	Unit
Permissible output low current (average value per pin)	I_{OL}	—	—	2.0*1	mA
Permissible output low current (max. value per pin)	I_{OL}	—	—	4.0*1	mA
Permissible output low current (total)	ΣI_{OL}	—	—	32	mA
Permissible output high current (average value per pin)	$-I_{OH}$	—	—	2.0	mA
Permissible output high current (max. value per pin)	$-I_{OH}$	—	—	4.0	mA
Permissible output high current (total)	$\Sigma -I_{OH}$	—	—	32	mA

Caution: To protect the MCU's reliability, the output current values should not exceed the values in this table.
Note 1. RIIC pin: IOL = 6 mA (max.)

Downloaded from Arrow.com.

Table 6.5 Permissible Power Consumption (G version product only)

Condition: VCC = 2.7 to 3.6 V, VSS = AVSS0 = VREFL0 = 0 V
AVCC0 = 3.0 to 3.6 V, VREFH0 = 3.0 V to AVCC0
$T_a = T_{opr}$

Item	Symbol	Typ.	Max.	Unit	Test Conditions
Total permissible power consumption*1	Pd	—	150	mW	85°C < Ta ≤ 105°C 64-pin version
	Pd	—	120	mW	85°C < Ta ≤ 105 °C 48-pin version

Note: • Please contact Renesas Electronics sales office for derating of operation under Ta = +85°C to +105°C. Derating is the systematic reduction of load for the sake of improved reliability.
Note 1. The total power consumption of the whole chip including output current.

Downloaded from Arrow.com.

6.3 AC Characteristics

Table 6.6 Operation Frequency Value

Conditions: VCC = 2.7 to 3.6 V, VSS = AVSS0 = VREFL0 = 0 V,
AVCC0 = 3.0 to 3.6 V, VREFH0 = 3.0 V to AVCC0,
Ta = T_{opr}

Item		Symbol	Min.	Typ	Max.	Unit
Operation frequency	System clock (ICLK)	f	—	—	100	MHz
	Peripheral module clock PCLK		—	—	50	
	Timer module clock (PCLKA)		—	—	100	
	S12AD clock (PCLKD)		—	—	50	
	Flash clock (FCLK)		—*1	—	50	

Note 1. The FCLK must run at a frequency of at least 4 MHz when changing the ROM or E2 DataFlash memory contents.

6.3.1 Clock Timing

Table 6.7 Clock Timing

Conditions: VCC = 2.7 to 3.6 V, VSS = AVSS0 = VREFL0 = 0 V,
AVCC0 = 3.0 to 3.6 V, VREFH0 = 3.0 V to AVCC0,
Ta = T_{opr}

Item		Symbol	Min	Typ	Max.	Unit	Test Conditions
EXTAL external clock input cycle time		t_{EXcyc}	50	—	—	ns	Figure 6.1
EXTAL external clock input high pulse width		t_{EXH}	20	—	—	ns	
EXTAL external clock input low pulse width		t_{EXL}	20	—	—	ns	
EXTAL external clock rising time		t_{EXr}	—	—	5	ns	
EXTAL external clock falling time		t_{EXf}	—	—	5	ns	
EXTAL external clock input wait time*1		t_{EXWT}	1	—	—	ms	
Main clock oscillator oscillation frequency		f_{MAIN}	4	—	16	MHz	
Main clock oscillation stabilization time (crystal)		$t_{MAINOSC}$	—	—	—*2	ms	Figure 6.2
Main clock oscillation stabilization wait time (crystal)		$t_{MAINOSCWT}$	—	—	—*3	ms	
LOCO, IWDTCLK clock cycle time		t_{cyc}	6.96	8	9.4	μs	
LOCO, IWDTCLK clock oscillation frequency		f_{LOCO}	106.25	125	143.75	kHz	
LOCO, IWDTCLK clock oscillation stabilization wait time		t_{LOCOWT}	—	—	20	μs	Figure 6.2
PLL clock oscillation stabilization time	PLL operation started after main clock oscillation has settled	t_{PLL1}	—	—	500	μs	Figure 6.4
PLL clock oscillation stabilization wait time		t_{PLLWT1}	—	—	—*4	ms	
PLL clock oscillation stabilization time PLL	PLL operation started before main clock oscillation has settled	t_{PLL2}	—	—	$t_{MAINOSC}$ + t_{PLL1}	ms	Figure 6.5
PLL clock oscillation stabilization wait time		t_{PLLWT2}	—	—	—*4	ms	

Note 1. This is the time until the clock is used after clearing the main clock oscillator stop bit (MOSCCR.MOSTP) to 0 (selecting operation).
Note 2. When using a main clock, ask the manufacturer of the oscillator to evaluate its oscillation. Refer to the results of evaluation provided by the manufacturer for the oscillation stabilization time.
Note 3. This is calculated from the formula below, where n is the number of cycles set by the MOSCWTCR.MSTS[4:0] bits.

$$t_{MAINOSCWT} = t_{MAINOSC} + \frac{n + 16384}{f_{MAIN}}$$

Downloaded from Arrow.com.

Note 4. This is calculated from the formula below, where n is the number of cycles set by the PLLWTCR.PSTS[4:0] bits.

$$t_{PLLWT1} = t_{PLL1} + \frac{n + 131072}{f_{PLL}}$$

$$t_{PLLWT2} = t_{PLL2} + \frac{n + 131072}{f_{PLL}} = t_{MAINOSC} + t_{PLL1} + \frac{n + 131072}{f_{PLL}}$$

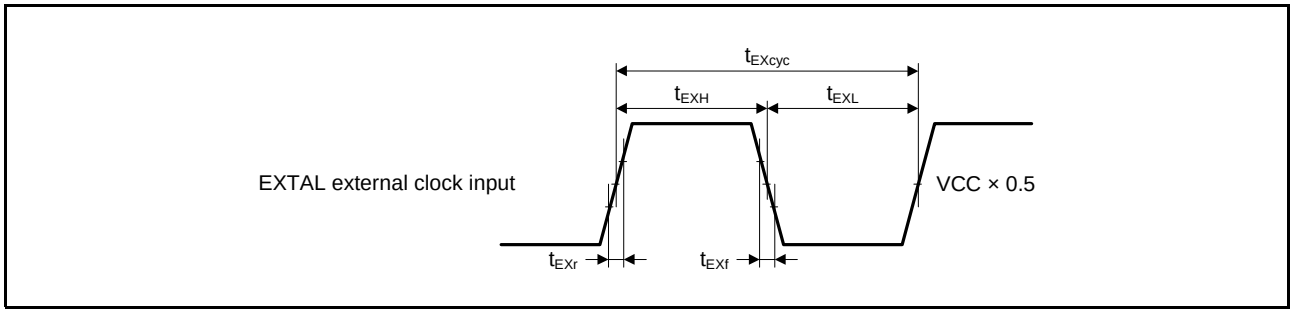

Figure 6.1 EXTAL External Clock Input Timing

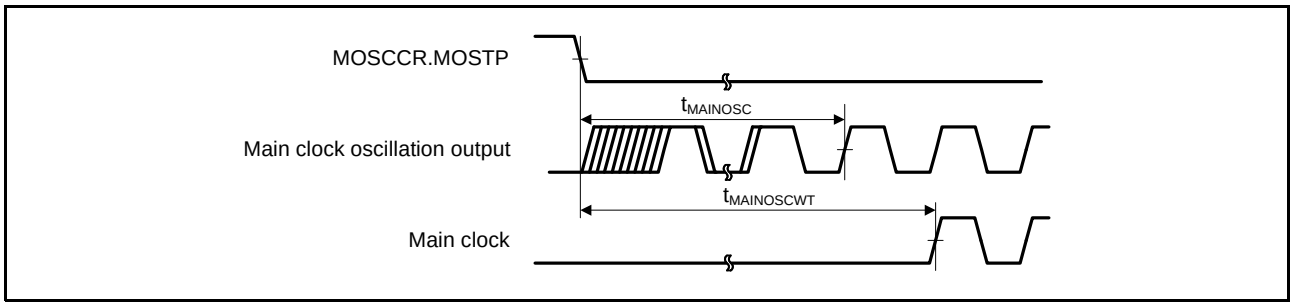

Figure 6.2 Main Clock Oscillation Start Timing

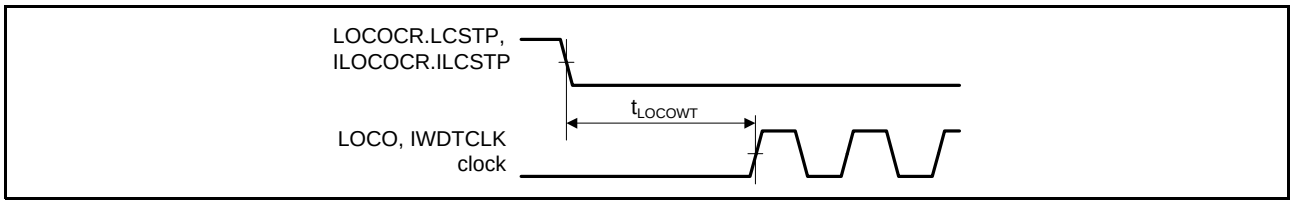

Figure 6.3 LOCO, IWDTCLK Clock Oscillation Start Timing

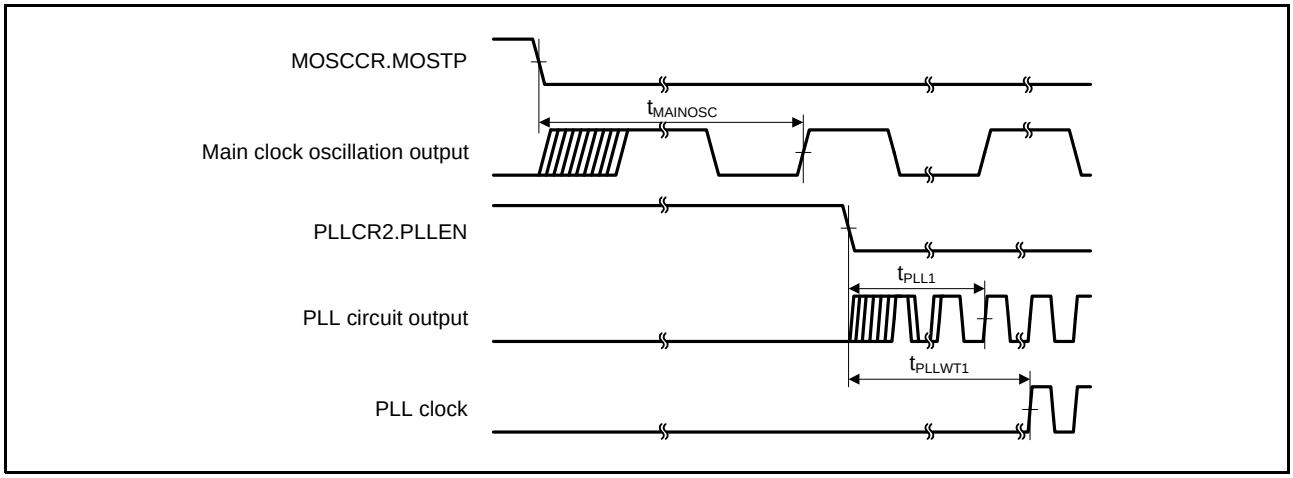

Figure 6.4 PLL Clock Oscillation Start Timing (PLL is Operated after Main Clock Oscillation Has Settled)

Downloaded from Arrow.com.

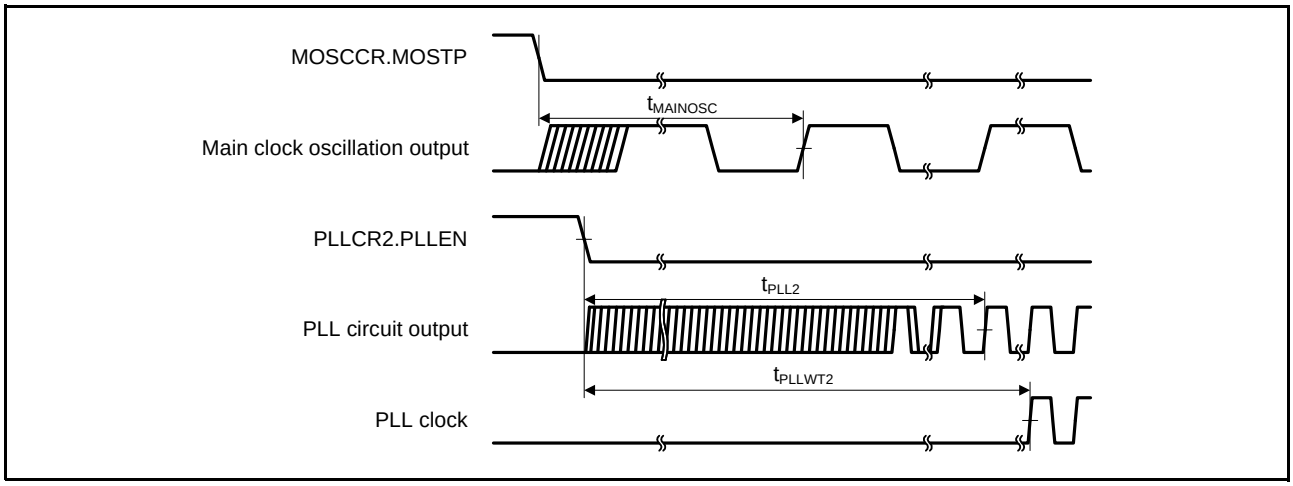

Figure 6.5 PLL Clock Oscillation Start Timing (PLL is Operated before Main Clock Oscillation Has Settled)

Downloaded from Arrow.com.

6.3.2 Reset Timing

Table 6.8 Reset Timing

Conditions: VCC = 2.7 to 3.6 V, VSS = AVSS0 = VREFL0 = 0 V,
AVCC0 = 3.0 to 3.6 V, VREFH0 = 3.0 V to AVCC0,
Ta = T_{opr}

Item		Symbol	Min	Typ	Max.	Unit	Test Conditions
RES# pulse width	Power-on	t_{RESWP}	2	—	—	ms	Figure 6.6
	Deep software standby mode	t_{RESWD}	1	—	—	ms	Figure 6.7
	Software standby mode	t_{RESWS}	1	—	—	ms	
	Other than above (except for programming or erasure of the ROM or E2 DataFlash memory or blank checking of the E2 DataFlash memory)	t_{RESW}	200	—	—	μs	
Wait time after RES# cancellation		t_{RESWT}	59	—	60	t_{cyc}	
Internal reset time (independent watchdog timer reset, watchdog timer reset, software reset)		t_{RESW2}	112	—	120	t_{cyc}	

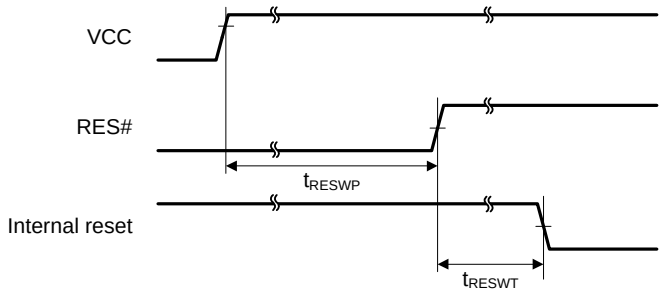

Figure 6.6 Reset Input Timing at Power-On

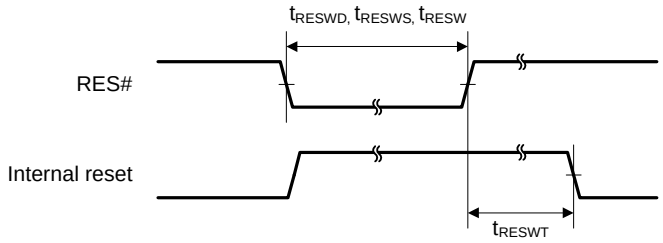

Figure 6.7 Reset Input Timing

Downloaded from Arrow.com.

6.3.3 Timing of Recovery from Low Power Consumption Modes

Table 6.9 Timing of Recovery from Low Power Consumption Modes

Conditions: VCC = 2.7 to 3.6 V, VSS = AVSS0 = VREFL0 = 0 V,
AVCC0 = 3.0 to 3.6 V, VREFH0 = 3.0 V to AVCC0,
Ta = T_{opr}

Item			Symbol	Min.	Typ.	Max.	Unit	Test Conditions
Recovery time after cancellation of software standby mode	Crystal resonator connected to main clock oscillator	Main clock oscillator operating	t_{SBYMC}	10	—	—	ms	Figure 6.8
		Main clock oscillator and PLL circuit operating	t_{SBYPC}	10	—	—	ms	
	External clock input to main clock oscillator	Main clock oscillator operating	t_{SBYEX}	1	—	—	ms	
		Main clock oscillator and PLL circuit operating	t_{SBYPE}	1	—	—	ms	
	Low-speed clock oscillator or IWDT-specific low-speed clock oscillator operating		t_{SBYLO}	—	—	800	μs	
Recovery time after cancellation of deep software standby mode			t_{DSBY}	—	—	1	ms	Figure 6.9
Wait time after cancellation of deep software standby mode			t_{DSBYWT}	45	—	46	t_{cyc}	

Note: • The wait time varies depending on the state in which each oscillator was when the WAIT instruction was executed. The recovery time when multiple oscillators are operating is the same period as that when the oscillator, which takes the longest time for recovery among the operating oscillators, is operating alone.

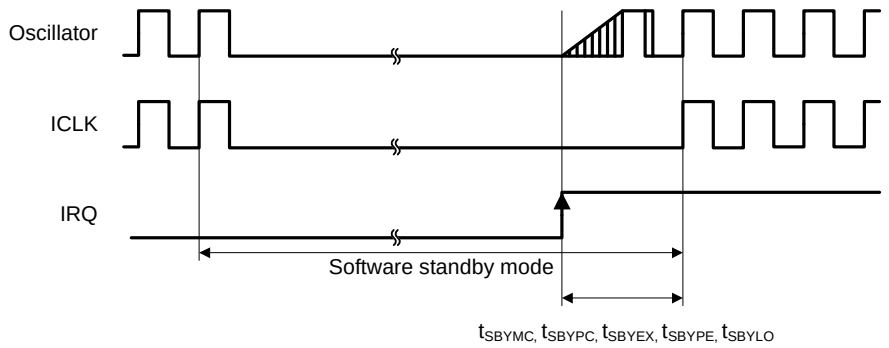

Figure 6.8 Software Standby Mode Cancellation Timing

Downloaded from Arrow.com.

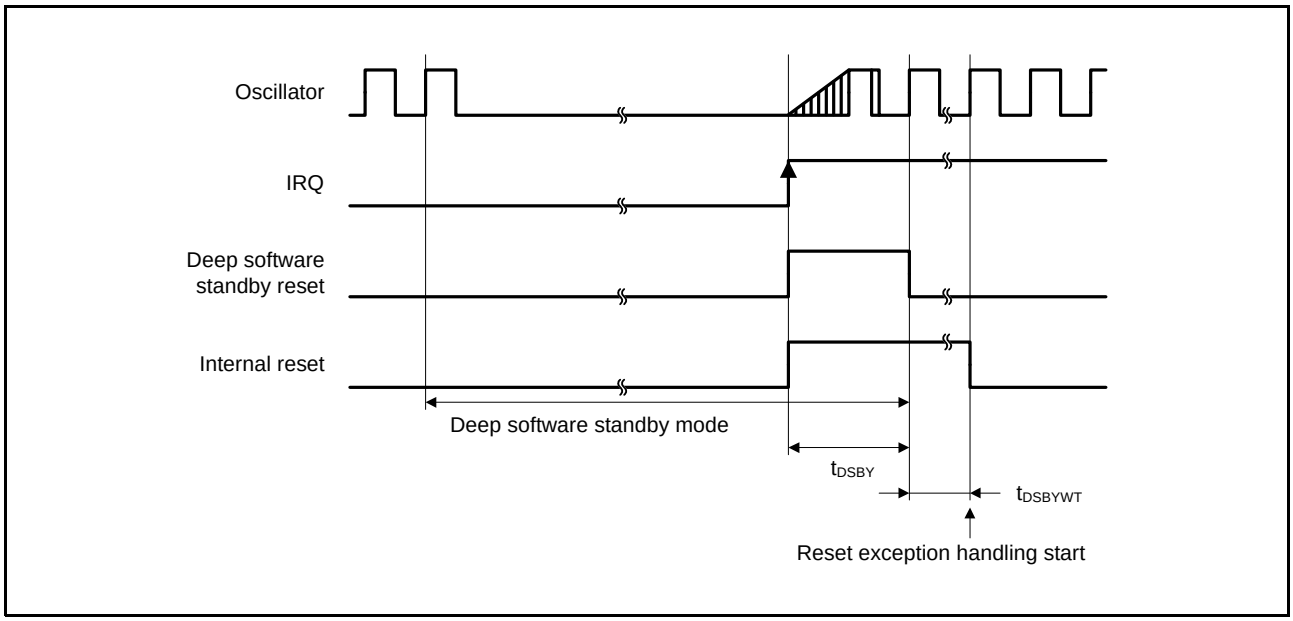

Figure 6.9 Deep Software Standby Mode Cancellation Timing

6.3.4 Control Signal Timing

Table 6.10 Control Signal Timing

Conditions: VCC = 2.7 to 3.6 V, VSS = AVSS0 = VREFL0 = 0 V,
AVCC0 = 3.0 to 3.6 V, VREFH0 = 3.0 V to AVCC0,
Ta = T_{opr}

Item	Symbol	Min.	Typ.	Max.	Unit	Test Conditions
NMI pulse width	t_{NMIW}	200	—	—	ns	$t_{Pcyc} \times 2 \leq 200$ns, Figure 6.10
		2			t_{Pcyc}	$t_{Pcyc} \times 2 > 200$ns, Figure 6.10
IRQ pulse width	t_{IRQW}	200	—	—	ns	$t_{Pcyc} \times 2 \leq 200$ns, Figure 6.11
		2			t_{Pcyc}	$t_{Pcyc} \times 2 > 200$ns, Figure 6.11

Note 1. t_{Pcyc}: PCLK cycle

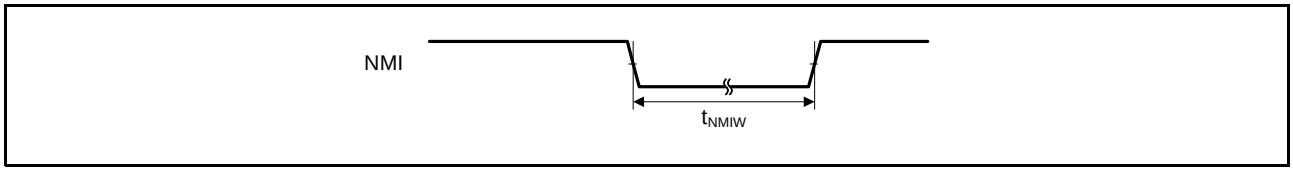

Figure 6.10 NMI Interrupt Input Timing

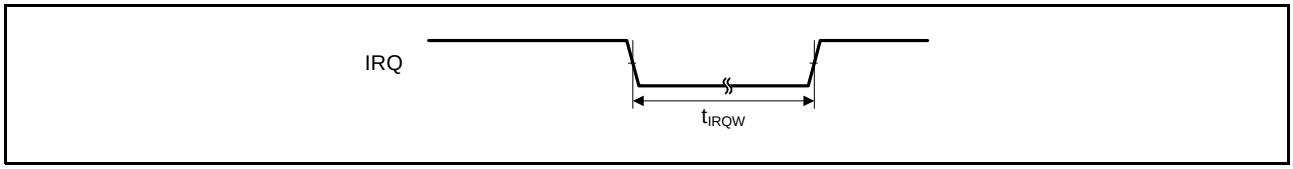

Figure 6.11 IRQ Interrupt Input Timing

Downloaded from Arrow.com.

6.3.5 Timing of On-Chip Peripheral Modules

Table 6.11 Timing of On-Chip Peripheral Modules (1)

Conditions: VCC = 2.7 to 3.6 V, VSS = AVSS0 = VREFL0 = 0 V,
AVCC0 = 3.0 to 3.6 V, VREFH0 = 3.0 V to AVCC0,
Ta = T_{opr}

Item			Symbol	Min.	Max.	Unit*1	Test Conditions
I/O ports	Input data pulse width		t_{PRW}	1.5	—	t_{Pcyc}	Figure 6.12
MTU3	Input capture input pulse width	Single-edge setting	t_{TICW}	3	—	t_{PAcyc}	Figure 6.13
		Both-edge setting		5	—		
	Timer clock pulse width	Single-edge setting	t_{TCKWH}, t_{TCKWL}	3	—	t_{PAcyc}	Figure 6.14
		Both-edge setting		5	—		
		Phase counting mode		5	—		
POE3	POE# input pulse width		t_{POEW}	1.5	—	t_{Pcyc}	Figure 6.16
GPT	Input capture input pulse width	Single-edge setting	t_{GTICW}	3	—	t_{PAcyc}	Figure 6.15
		Both-edge setting		5	—		
	External trigger input pulse width	Single-edge setting	t_{OTETW}	3	—	t_{PAcyc}	Figure 6.18
		Both-edge setting		5	—		
SCI	Input clock cycle	Asynchronous	t_{Scyc}	4	—	t_{Pcyc}	Figure 6.17
		Clock synchronous		6	—		
	Input clock pulse width		t_{SCKW}	0.4	0.6	t_{Scyc}	
	Input clock rise time		t_{SCKr}	—	20	ns	
	Input clock fall time		t_{SCKf}	—	20	ns	
	Output clock cycle	Asynchronous	t_{Scyc}	16	—	t_{Pcyc}	
		Clock synchronous		4	—		
	Output clock pulse width		t_{SCKW}	0.4	0.6	t_{Scyc}	
	Output clock rise time		t_{SCKr}	—	20	ns	
	Output clock fall time		t_{SCKf}	—	20	ns	
	Transmit data delay time	Clock synchronous	t_{TXD}	—	40	ns	Figure 6.18
	Receive data setup time	Clock synchronous	t_{RXS}	40	—	ns	
	Receive data hold time	Clock synchronous	t_{RXH}	40	—	ns	
A/D converter	12-bit A/D converter trigger input pulse width		t_{TRGW}	1.5	—	t_{Pcyc}	Figure 6.19

Note 1. t_{Pcyc}: PCLK cycle, t_{PAcye}: PCLKA cycle

Downloaded from Arrow.com.

Table 6.12 Timing of On-Chip Peripheral Modules (2)

Conditions: VCC = 2.7 to 3.6 V, VSS = AVSS0 = VREFL0 = 0 V,
AVCC0 = 3.0 to 3.6 V, VREFH0 = 3.0 V to AVCC0,
Ta = T_{opr}

Item			Symbol	Min.	Max.	Unit*1	Test Conditions
RSPI	RSPCK clock cycle	Master	t_{SPcyc}	2	4096	t_{Pcyc}	Figure 6.20
		Slave		8	4096		
	RSPCK clock high pulse width	Master	t_{SPCKWH}	$(t_{SPcyc} - t_{SPCKR} - t_{SPCKF}) / 2 - 3$	—	ns	
		Slave		$(t_{SPcyc} - t_{SPCKR} - t_{SPCKF}) / 2$	—		
	RSPCK clock low pulse width	Master	t_{SPCKWL}	$(t_{SPcyc} - t_{SPCKR} - t_{SPCKF}) / 2 - 3$	—	ns	
		Slave		$(t_{SPcyc} - t_{SPCKR} - t_{SPCKF}) / 2$	—		
	RSPCK clock rise/fall time	Output	t_{SPCKR}, t_{SPCKF}	—	5	ns	
		Input		—	1	μs	
	Data input setup time	Master	t_{SU}	15	—	ns	Figure 6.21 to Figure 6.24
				20	—		
		Slave		$20 - t_{Pcyc}$	—		
	Data input hold time	Master	t_H	0	—	ns	
		Slave		$20 + 2 \times t_{Pcyc}$	—		
	SSL setup time	Master	t_{LEAD}	1	8	t_{SPcyc}	
		Slave		4	—	t_{Pcyc}	
	SSL hold time	Master	t_{LAG}	1	8	t_{SPcyc}	
		Slave		4	—	t_{Pcyc}	
	Data output delay time	Master	t_{OD}	—	18	ns	
		Slave		—	$3 \times t_{Pcyc} + 40$		
	Data output hold time	Master	t_{OH}	0	—	ns	
		Slave		0	—		
	Successive transmission delay time	Master	t_{TD}	$t_{SPcyc} + 2 \times t_{Pcyc}$	$8 \times t_{SPcyc} + 2 \times t_{Pcyc}$	ns	
		Slave		$4 \times t_{Pcyc}$	—		
	MOSI rise/fall time	Output	t_{MODR}, t_{MODF}	—	5	ns	
		Input		—	1	μs	
	MISO rise/fall time	Output	t_{MODR}, t_{MODF}	—	5	ns	
		Input		—	1	μs	
	SSL rise/fall time	Output	t_{SSLr}, t_{SSLf}	—	15	ns	
		Input		—	1	μs	
	Slave access time		t_{SA}	—	4	t_{Pcyc}	Figure 6.23 and Figure 6.24
	Slave output release time		t_{REL}	—	3	t_{Pcyc}	

Note 1. t_{Pcyc}: PCLK cycle

Downloaded from Arrow.com.

Table 6.13 Timing of On-Chip Peripheral Modules (3)

Conditions: VCC = 2.7 to 3.6 V, VSS = AVSS0 = VREFL0 = 0 V,
AVCC0 = 3.0 to 3.6 V, VREFH0 = 3.0 V to AVCC0,
Ta = T_{opr}

Item		Symbol	Min.	Max.	Unit*1	Test Conditions
Simple SPI	SCK clock cycle output (master)	t_{SPcyc}	4	65536	t_{Pcyc}	Figure 6.20
	SCK clock cycle input (slave)		8	65536		
	SCK clock high pulse width	t_{SPCKWH}	0.4	0.6	t_{SPcyc}	
	SCK clock low pulse width	t_{SPCKWL}	0.4	0.6	t_{SPcyc}	
	SCK clock rise/fall time	t_{SPCKR}, t_{SPCKF}	—	20	ns	
	Data input setup time	t_{SU}	40	—	ns	Figure 6.21 to Figure 6.24
	Data input hold time	t_{H}	40	—	ns	
	SS input setup time	t_{LEAD}	6	—	t_{Pcyc}	
	SS input hold time	t_{LAG}	6	—	t_{Pcyc}	
	Data output delay time	t_{OD}	—	40	ns	
	Data output hold time	t_{OH}	–10	—	ns	
	Data rise/fall time	t_{DR}, t_{DF}	—	20	ns	
	SS input rise/fall time	t_{SSLr}, t_{SSLf}	—	20	ns	
	Slave access time	t_{SA}	—	5	t_{Pcyc}	Figure 6.23 and Figure 6.24
	Slave output release time	t_{REL}	—	5	t_{Pcyc}	

Note 1. t_{Pcyc}: PCLK cycle

Downloaded from Arrow.com.

Table 6.14 Timing of On-Chip Peripheral Modules (4)

Conditions: VCC = 2.7 to 3.6 V, VSS = AVSS0 = VREFL0 = 0 V,
AVCC0 = 3.0 to 3.6 V, VREFH0 = 3.0 V to AVCC0,
Ta = T_{opr}

Item		Symbol	Min.	Max.	Unit	Test Conditions
RIIC (Standard-mode)	SCL input cycle time	t_{SCL}	6(12) × t_{IICcyc} + 1300	—	ns	Figure 6.25
	SCL input high pulse width	t_{SCLH}	3(6) × t_{IICcyc} + 300	—	ns	
	SCL input low pulse width	t_{SCLL}	3(6) × t_{IICcyc} + 300	—	ns	
	SCL, SDA input rise time	t_{Sr}	—	1000	ns	
	SCL, SDA input fall time	t_{Sf}	—	300	ns	
	SCL, SDA input spike pulse removal time	t_{SP}	0	1(4) × t_{IICcyc}	ns	
	SDA input bus free time	t_{BUF}	3(6) × t_{IICcyc} + 300	—	ns	
	Start condition input hold time	t_{STAH}	t_{IICcyc} + 300	—	ns	
	Restart condition input setup time	t_{STAS}	1000	—	ns	
	Stop condition input setup time	t_{STOS}	1000	—	ns	
	Data input setup time	t_{SDAS}	t_{IICcyc} + 50	—	ns	
	Data input hold time	t_{SDAH}	0	—	ns	
	SCL, SDA capacitive load	C_b	—	400	pF	
RIIC (Fast-mode)	SCL input cycle time	t_{SCL}	6(12) × t_{IICcyc} + 600	—	ns	
	SCL input high pulse width	t_{SCLH}	3(6) × t_{IICcyc} + 300	—	ns	
	SCL input low pulse width	t_{SCLL}	3(6) × t_{IICcyc} + 300	—	ns	
	SCL, SDA input rise time	t_{Sr}	20 + 0.1C_b	300	ns	
	SCL, SDA input fall time	t_{Sf}	20 + 0.1C_b	300	ns	
	SCL, SDA input spike pulse removal time	t_{SP}	0	1(4) × t_{IICcyc}	ns	
	SDA input bus free time	t_{BUF}	3(6) × t_{IICcyc} + 300	—	ns	
	Start condition input hold time	t_{STAH}	t_{IICcyc} + 300	—	ns	
	Restart condition input setup time	t_{STAS}	300	—	ns	
	Stop condition input setup time	t_{STOS}	300	—	ns	
	Data input setup time	t_{SDAS}	t_{IICcyc} + 50	—	ns	
	Data input hold time	t_{SDAH}	0	—	ns	
	SCL, SDA capacitive load	C_b	—	400	pF	

Note 1. t_{IICcyc}: RIIC internal reference clock (IICϕ) Cycle
Note 2. The value within parentheses is applicable when the value of the ICMR3.NF[1:0] bits is 11b while the digital filter is enabled by the setting ICFER.NFE = 1.
Note 3. Cb is the total capacitance of the bus lines.

Downloaded from Arrow.com.

Table 6.15 Timing of On-Chip Peripheral Modules (5)

Conditions: VCC = 2.7 to 3.6 V, VSS = AVSS0 = VREFL0 = 0 V,
AVCC0 = 3.0 to 3.6 V, VREFH0 = 3.0 V to AVCC0,
Ta = T_{opr}

Item		Symbol	Min.*1, *2	Max.	Unit	Test Conditions
Simple IIC (Standard-mode)	SCL, SDAinput rise time	t_{Sr}	—	1000	ns	Figure 6.25
	SCL, SDA input fall time	t_{Sf}	—	300	ns	
	SCL, SDA input spike pulse removal time	t_{SP}	0	4 × t_{IICcyc}	ns	
	Data input setup time	t_{SDAS}	250	—	ns	
	Data input hold time	t_{SDAH}	0	—	ns	
	SCL, SDA capacitive load	C_b	—	400	pF	
Simple IIC (Fast-mode)	SCL, SDA input rise time	t_{Sr}	20 + 0.1C_b	300	ns	
	SCL, SDA input fall time	t_{Sf}	20 + 0.1C_b	300	ns	
	SCL, SDA input spike pulse removal time	t_{SP}	0	4 × t_{IICcyc}	ns	
	Data input setup time	t_{SDAS}	100	—	ns	
	Data input hold time	t_{SDAH}	0	—	ns	
	SCL, SDA capacitive load	C_b	—	400	pF	

Note 1. The value in parentheses is used when ICMR3.NF[1:0] are set to 11b while a digital filter is enabled with ICFER.NFE = 1.
Note 2. Cb indicates the total capacity of the bus line.

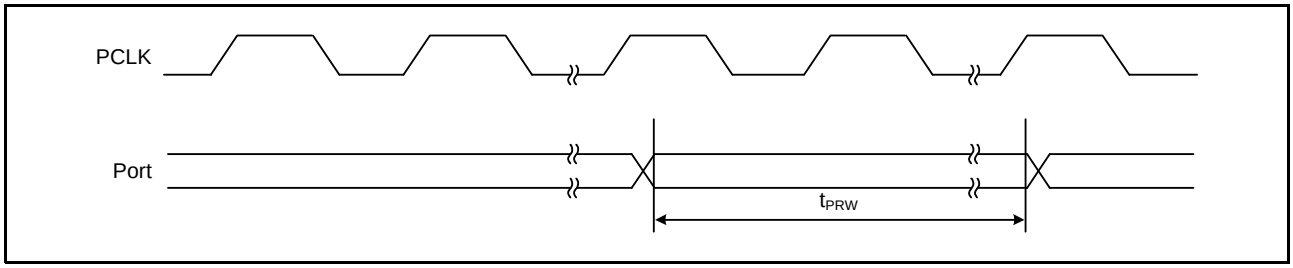

Figure 6.12 I/O port Input Timing

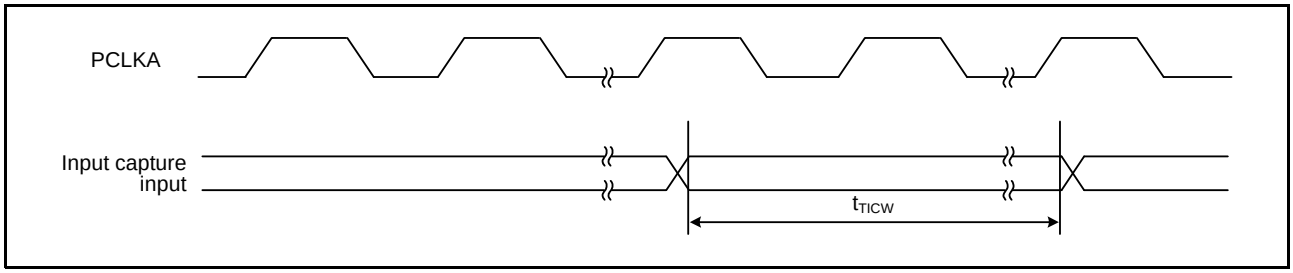

Figure 6.13 MTU3 Input/Output Timing

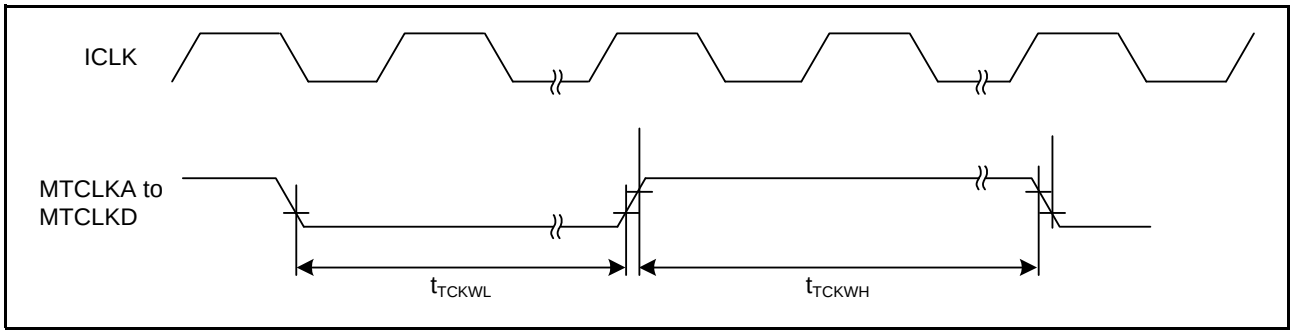

Figure 6.14 MTU3 Clock Input Timing

Downloaded from Arrow.com.

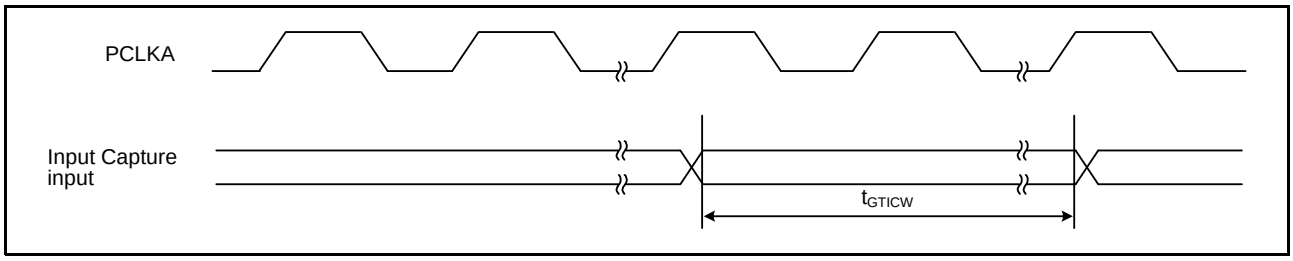

Figure 6.15 GPT Input/Output Timing

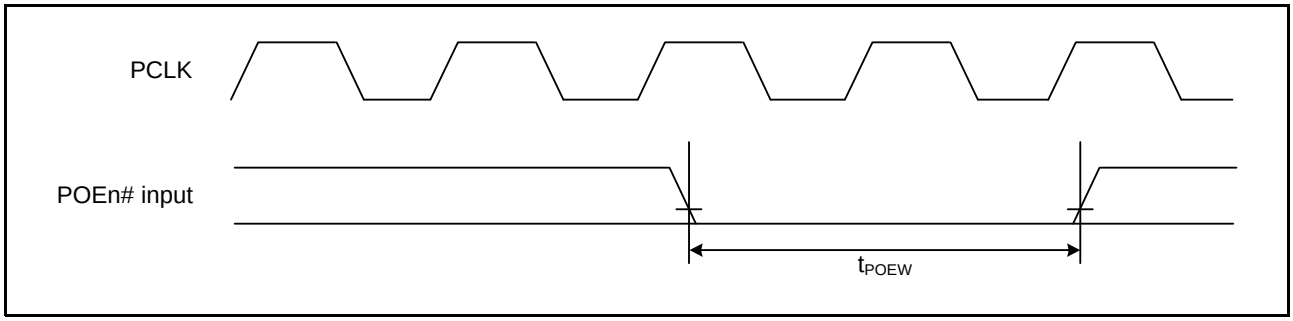

Figure 6.16 POE3# Input Timing

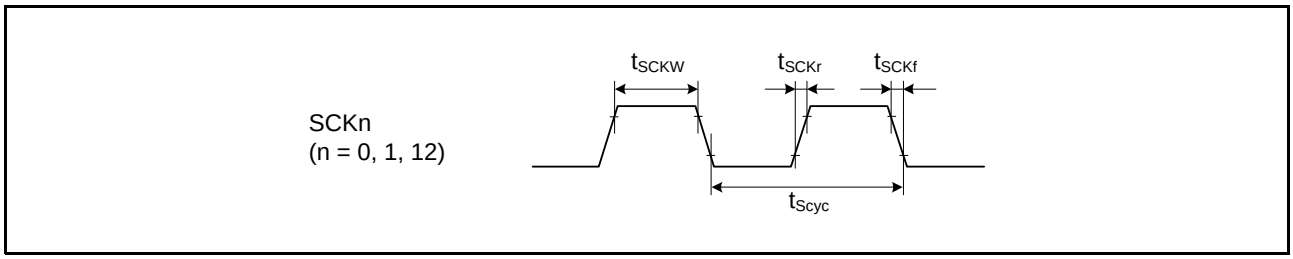

Figure 6.17 SCK Clock Input Timing

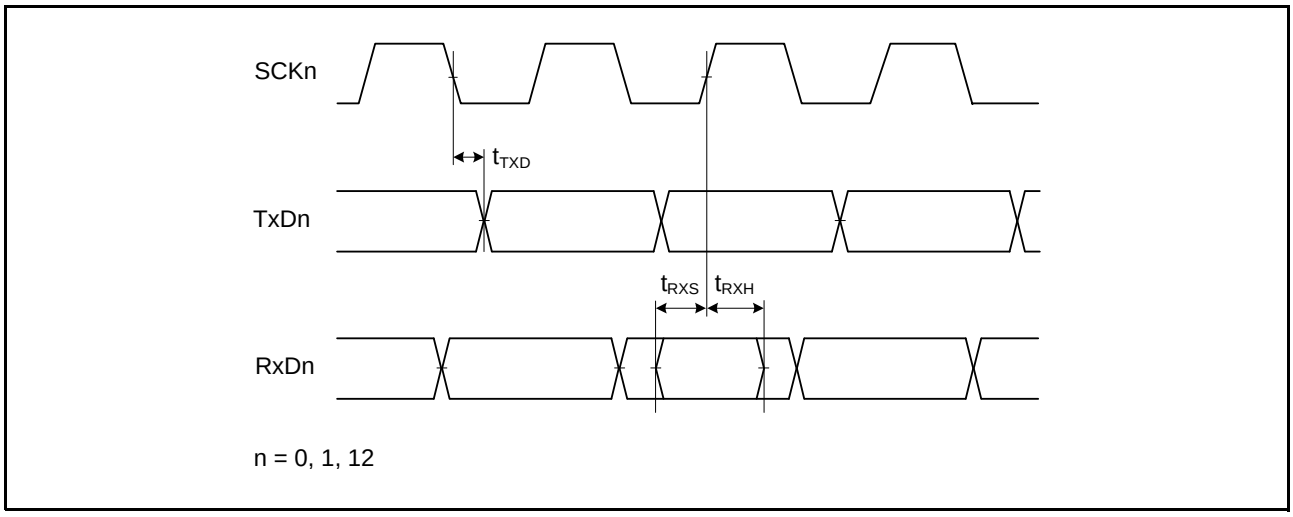

Figure 6.18 SCI Input/Output Timing: Clock Synchronous Mode

Downloaded from Arrow.com.

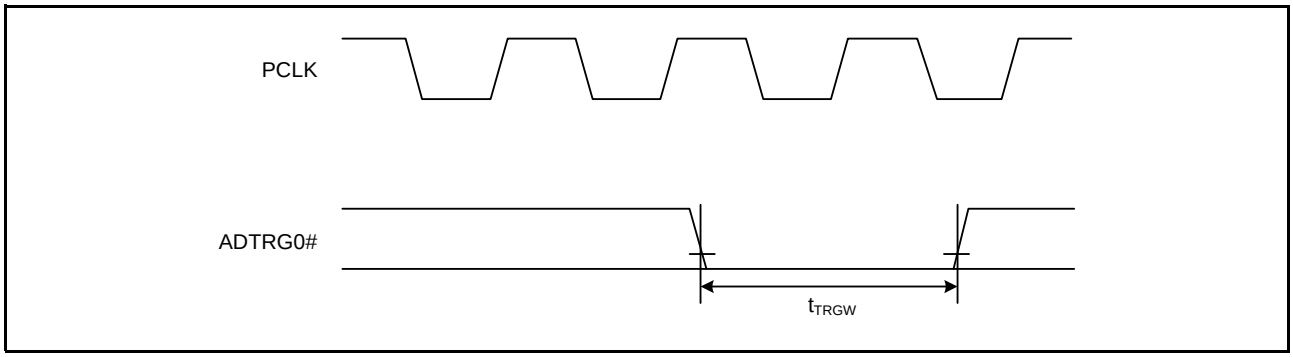

Figure 6.19 AD Converter External Trigger Input Timing

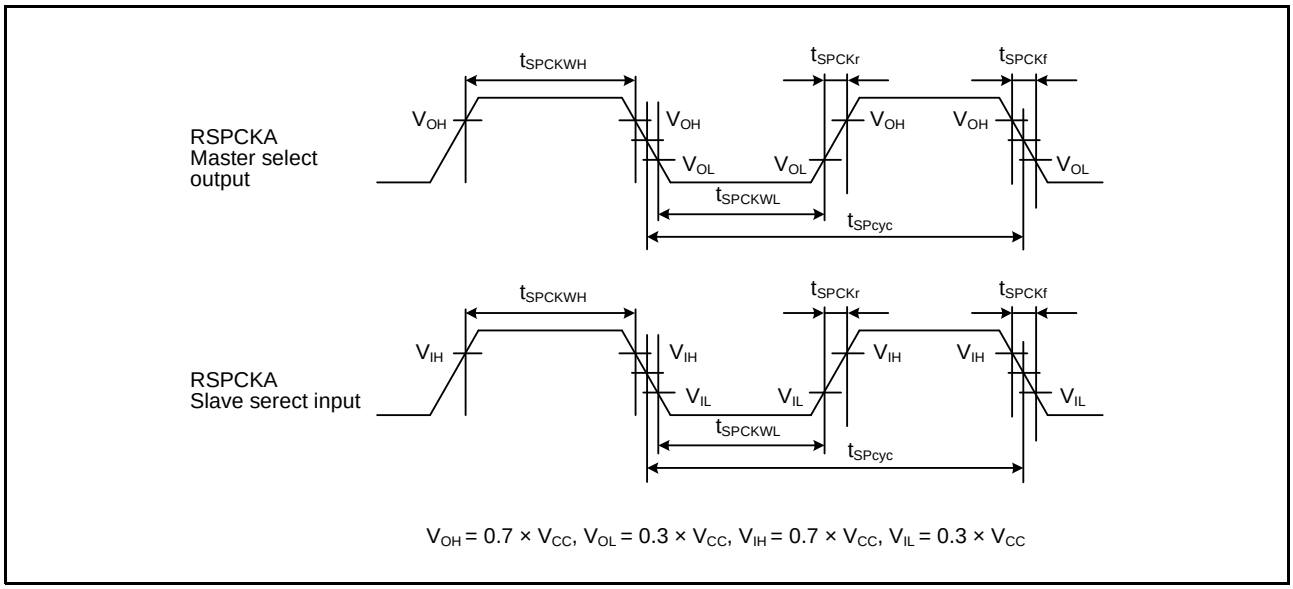

Figure 6.20 RSPI Clock Timing and Simple SPI Clock Timing

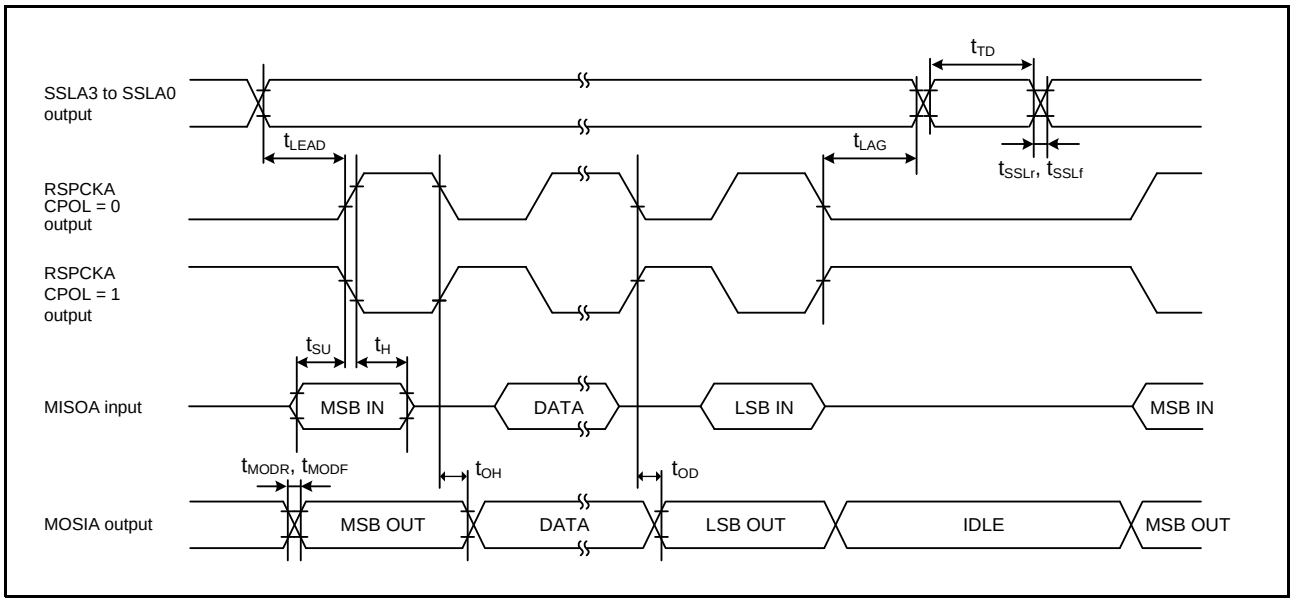

Figure 6.21 RSPI Timing (Master, CPHA = 0) and Simple SPI Timing (Master, CKPH = 1)

Downloaded from Arrow.com.

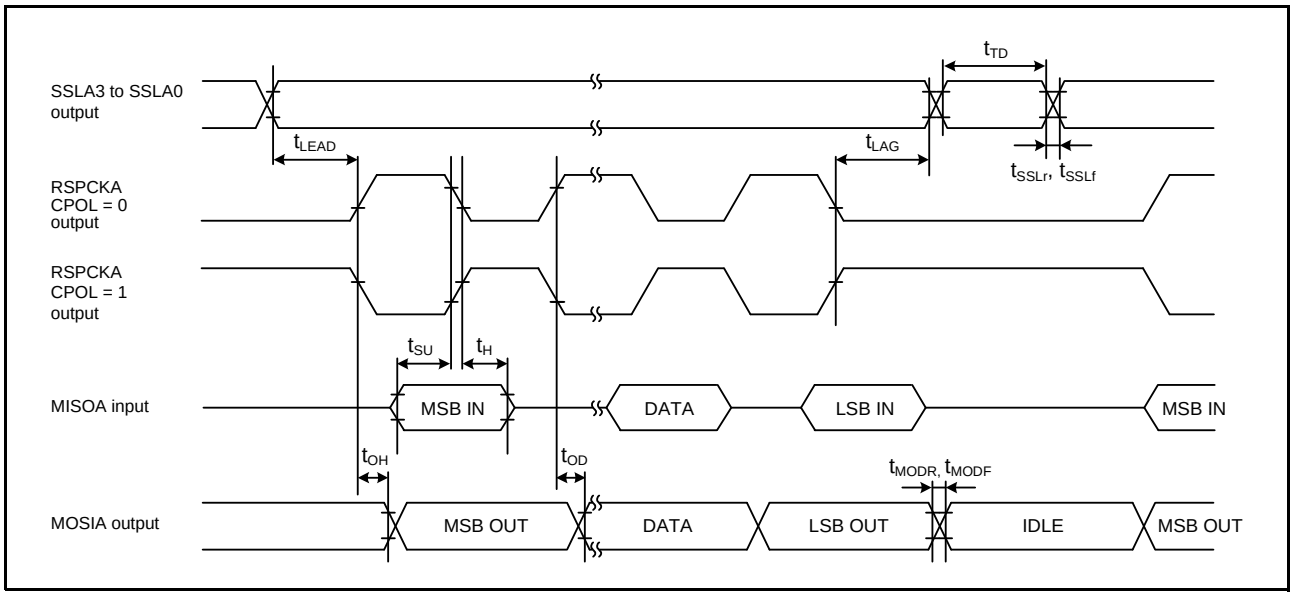

Figure 6.22 RSPI Timing (Master, CPHA = 1) and Simple SPI Timing (Master, CKPH = 0)

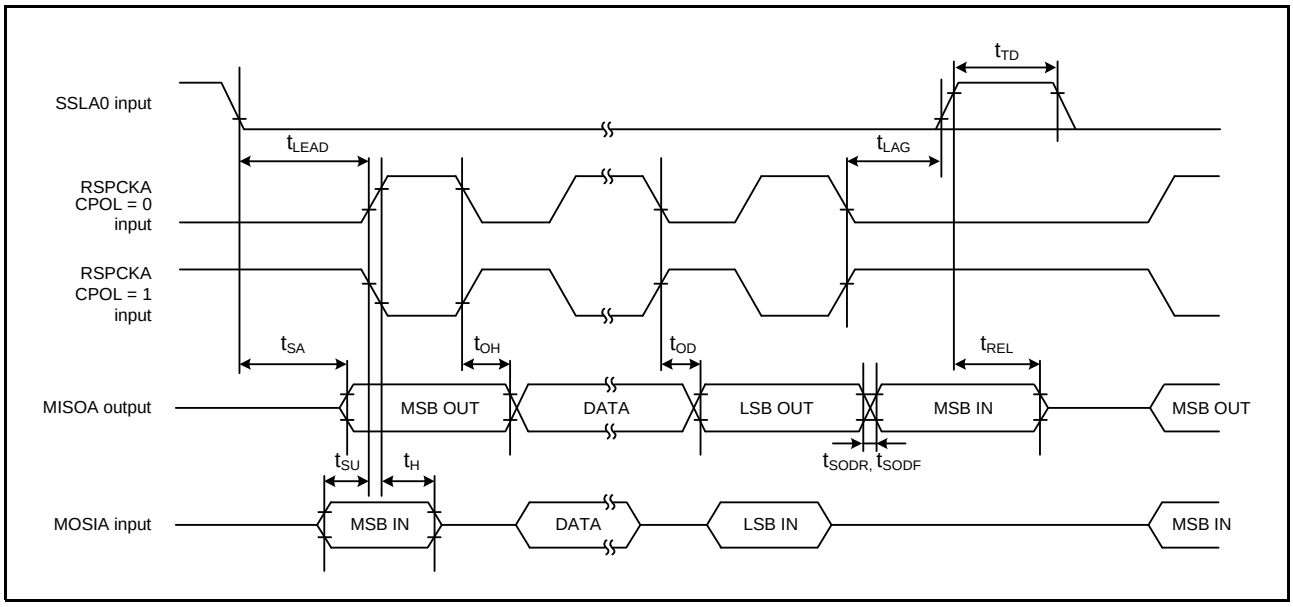

Figure 6.23 RSPI Timing (Slave, CPHA = 0) and Simple SPI Timing (Slave, CKPH = 1)

Downloaded from Arrow.com.

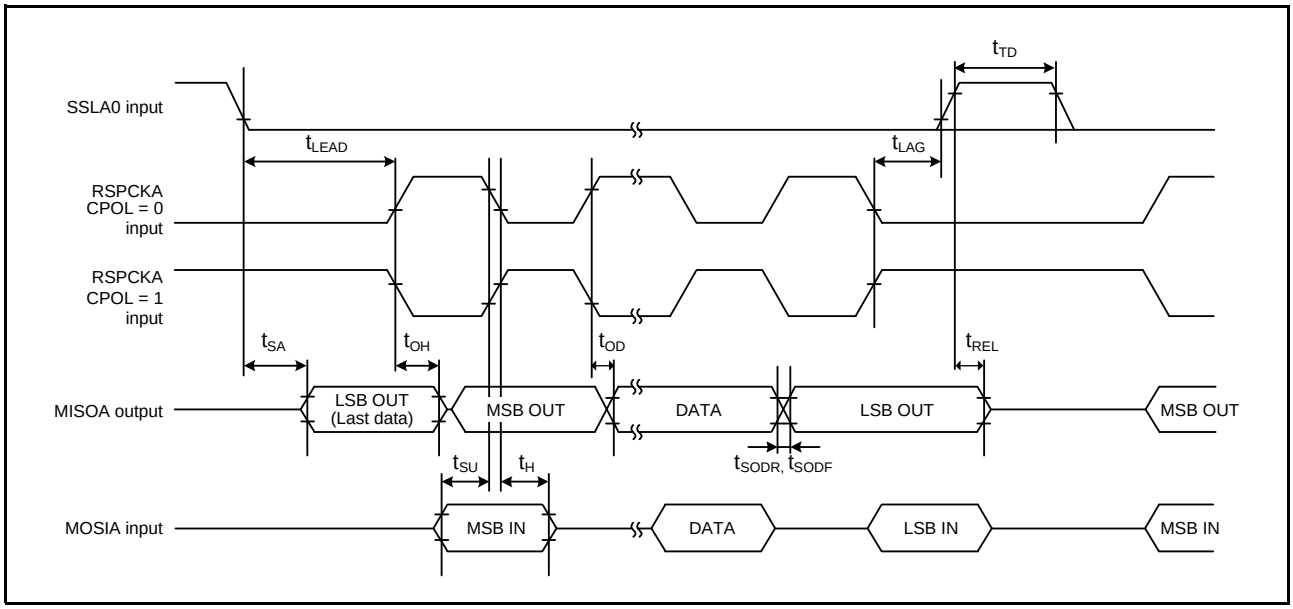

Figure 6.24 RSPI Timing (Slave, CPHA = 1) and Simple SPI Timing (Slave, CKPH = 0)

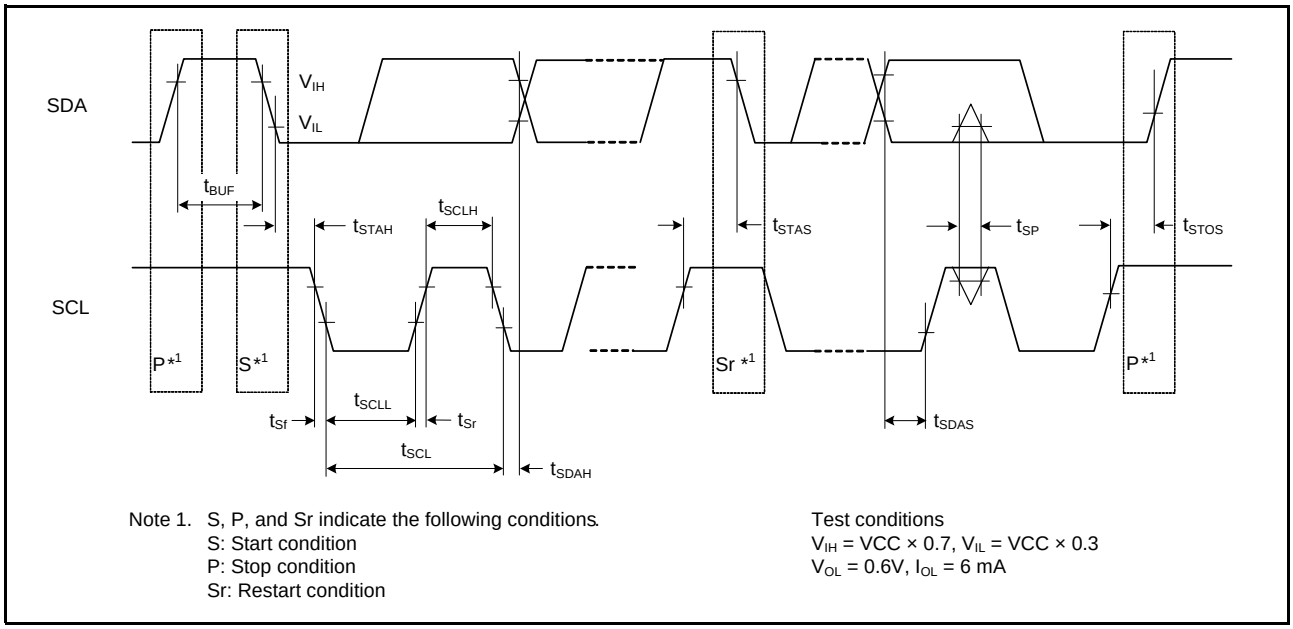

Figure 6.25 RIIC Bus Interface Input/Output Timing and Simple IIC Bus Interface Input/Output Timing

Downloaded from Arrow.com.

6.4 A/D Conversion Characteristics

Table 6.16 12-Bit A/D Conversion Characteristics

Conditions: VCC = 2.7 to 3.6 V, VSS = AVSS0 = VREFL0 = 0 V,
AVCC0 = 3.0 to 3.6 V, VREFH0 = 3.0 V to AVCC0,
Ta = T_{opr}

Item		min	typ	max	Unit	Test Conditions
Resolution		12	12	12	Bit	
Conversion time *1 (ADCLK = 50 MHz)	When the sample-and-hold circuit is in use per pin	1.6	—	—	μs	Sampling by the sample-and-hold circuit in 30 states. Sampling by the A/D converter in 20 states.
	When the sample-and-hold circuit is not in use per pin	1.0	—	—	μs	Sampling by the A/D converter in 20 states.
Analog input capacitance		—	—	6	pF	
Integral nonlinearity error		—	—	±4.0	LSB	
Offset error		—	—	±7.5	LSB	
Full-scale error		—	—	±7.5	LSB	
Quantization error		—	±0.5	—	LSB	
Absolute accuracy	Sample and hold circuit in use	—	—	±8.0	LSB	AVin = 0.25 to AV_{REFH}–0.25
	Sample and hold circuit not in use	—	—	±8.0	LSB	AVin = AV_{REFL} to AV_{REFH}
Permissible signal source impedance		—	—	3.0	kΩ	

Note 1. The conversion time includes the sampling time and the comparison time. As the test conditions, the number of sampling states is indicated.

Table 6.17 Comparator Characteristics

Conditions: VCC = 2.7 to 3.6 V, VSS = AVSS0 = VREFL0 = 0 V,
AVCC0 = 3.0 to 3.6 V, VREFH0 = 3.0 V to AVCC0,
Ta = T_{opr}

Item	Symbol	Min	Typ	Max.	Unit	Test Conditions
Analog input capacitance	Cin	—	—	6	pF	
REFH pin offset voltage	Voff	—	—	5	mV	
REFL pin offset voltage		—	—	5	mV	
REFH input voltage range	Vin	1.7	—	AVcc – 0.3	V	
REFL input voltage range		0.3	—	AVcc – 1.7	V	
REFH reply time	tCR	—	—	0.5	μs	
REFL reply time	tCF	—	—	0.5	μs	

Downloaded from Arrow.com.

6.5 Power-on Reset Circuit and Voltage Detection Circuit Characteristics

Table 6.18 Power-on Reset Circuit and Voltage Detection Circuit Characteristics

Conditions: VCC = 2.7 to 3.6 V, VSS = AVSS0 = VREFL0 = 0 V,
AVCC0 = 3.0 to 3.6 V, VREFH0 = 3.0 V to AVCC0,
Ta = T_{opr}

Item		Symbol	Min.	Typ.	Max.	Unit	Test Conditions
Voltage detection level	Power-on reset (POR)	V_{POR}	2.5	2.6	2.7	V	Figure 6.26
	Voltage detection circuit (LVD0)	V_{DET0}	2.7	2.8	2.9		Figure 6.27
	Voltage detection circuit (LVD1)	V_{DET1}	2.80	2.95	3.10		
	Voltage detection circuit (LVD2)	V_{DET2}	2.80	2.95	3.10		
Internal reset time	Power-on reset (POR)	t_{POR}	—	4.6		ms	Figure 6.26
	Voltage detection circuit (LVD0)	t_{LVD0}	—	4.6			Figure 6.27
	Voltage detection circuit (LVD1)	t_{LVD1}	—	0.9			Figure 6.28
	Voltage detection circuit (LVD2)	t_{LVD2}	—	0.9			Figure 6.29
Minimum VCC down time*1		t_{VOFF}	200	—	—	μs	Figure 6.26, Figure 6.27
Response delay time		t_{det}			200	μs	Figure 6.26 to Figure 6.29
LVD operation stabilization time (after LVD is enabled)		$Td_{(E-A)}$			3	μs	Figure 6.28 Figure 6.29
Hysteresis width (LVD1 and LVD2)		V_{LVH}		80		mV	

Note 1. The minimum VCC down time indicates the time when VCC is below the minimum value of voltage detection levels V_{POR}, V_{DET1}, and V_{DET2} for the POR/ LVD.

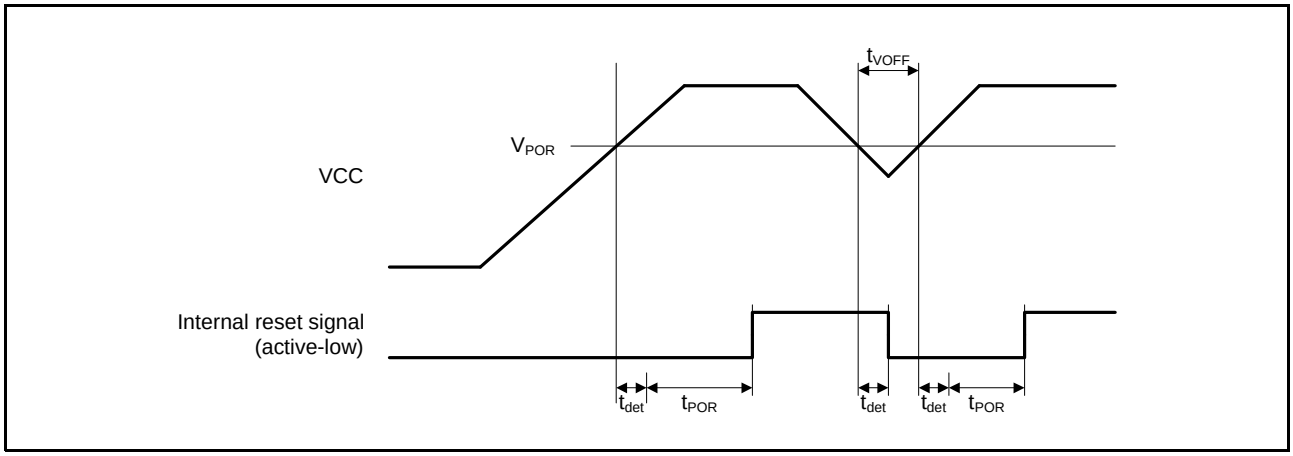

Figure 6.26 Power-on Reset Timing

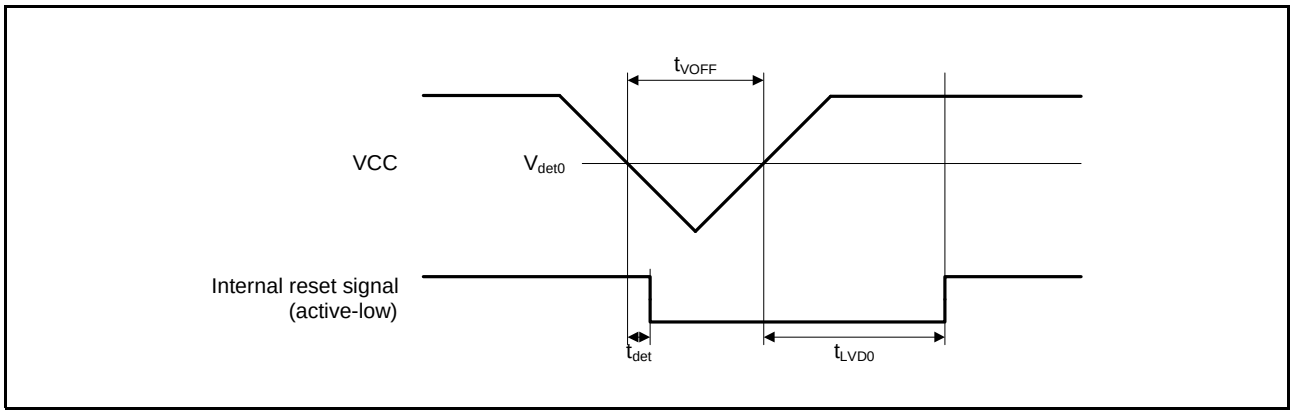

Figure 6.27 Voltage Detection Circuit Timing (V_{det0})

Downloaded from Arrow.com.

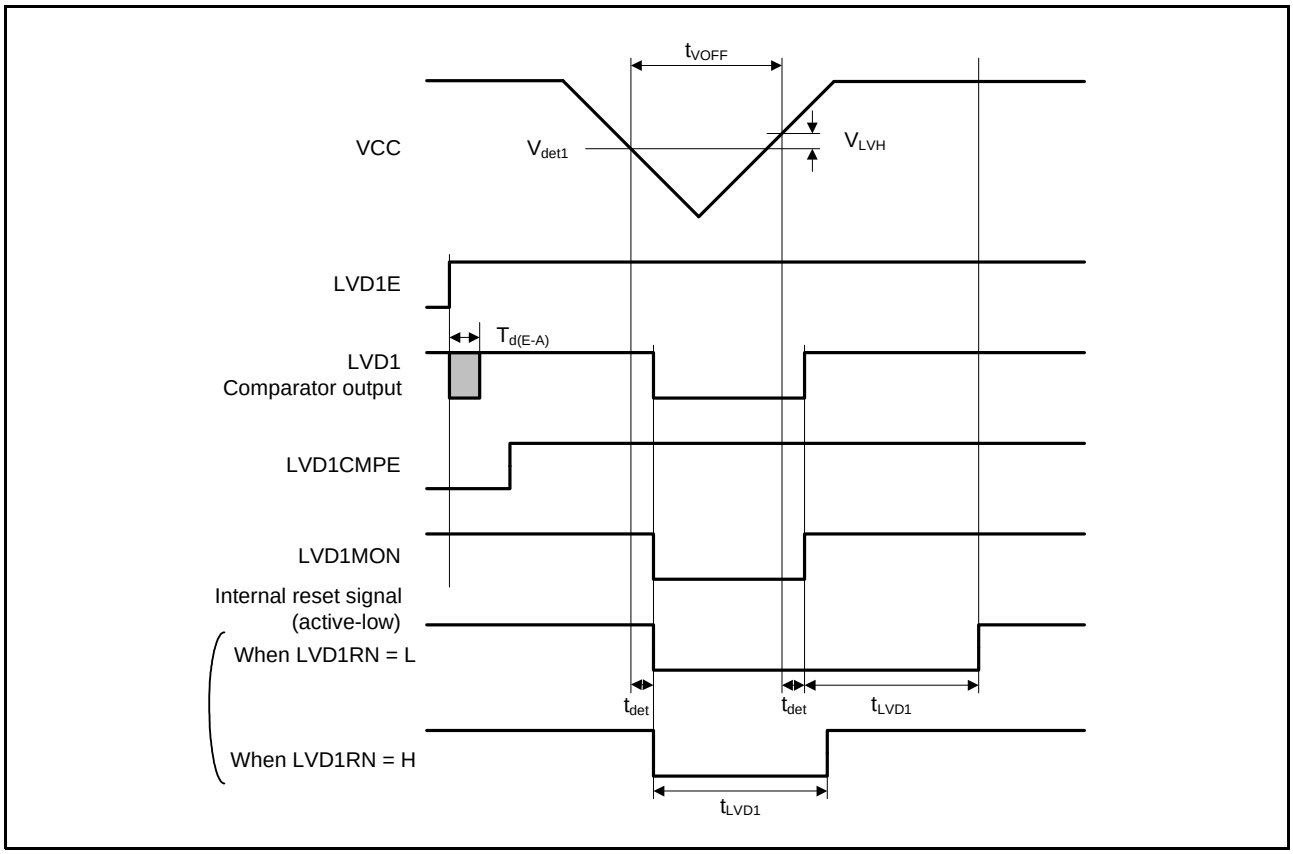

Figure 6.28 Voltage Detection Circuit Timing (V_{det1})

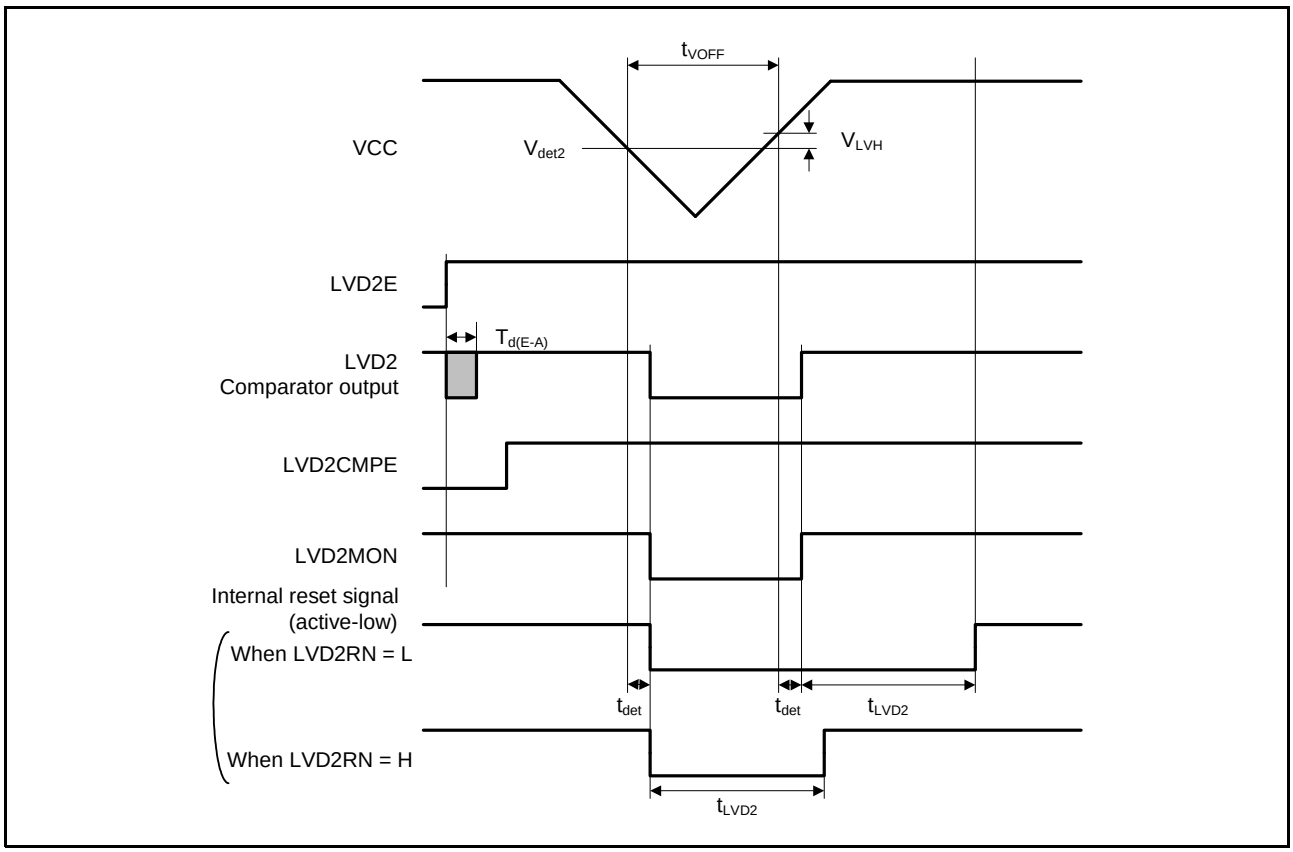

Figure 6.29 Voltage Detection Circuit Timing (V_{det2})

Downloaded from Arrow.com.

6.6 Oscillation Stop Detection Circuit Characteristics

Table 6.19 Oscillation Stop Detection Circuit Characteristics

Conditions: VCC = 2.7 to 3.6 V, VSS = AVSS0 = VREFL0 = 0 V, AVCC0 = 3.0 to 3.6 V, VREFH0 = 3.0 V to AVCC0, Ta = T_{opr}

Item	Symbol	Min.	Typ.	Max.	Unit	Test Conditions
Detection time	t_{dr}	—	—	1.0	ms	Figure 6.30

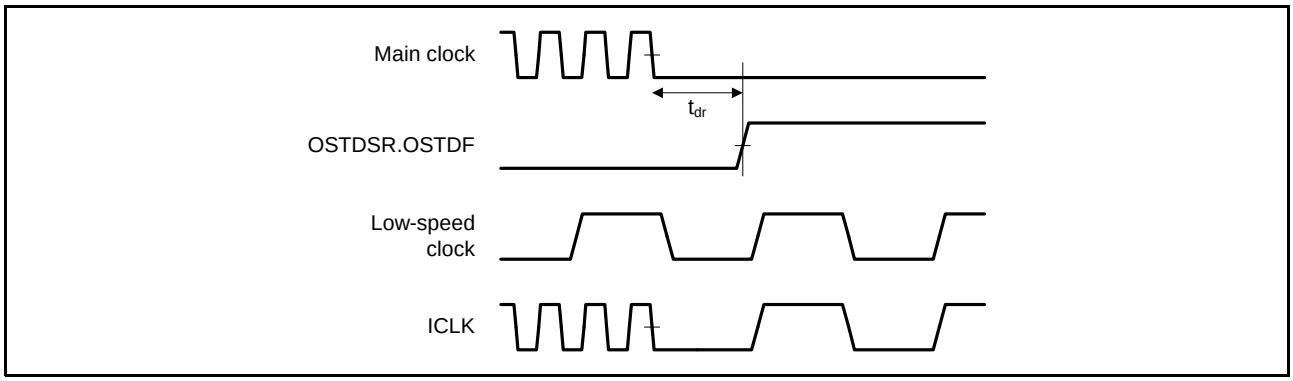

Figure 6.30 Oscillation Stop Detection Timing

Downloaded from Arrow.com.

6.7 ROM (Flash Memory for Code Storage) Characteristics

Table 6.20 ROM (Flash Memory for Code Storage) Characteristics (1)

Condition: VCC = 2.7 to 3.6 V, VSS = AVSS0 = VREFL0 = 0 V
AVCC0 = 3.0 to 3.6 V, VREFH0 = 3.0 V to AVCC0,
Temperature range for the programming/erasure operation: $T_a = T_{opr}$. T_a is common to conditions 1 to 3.

Item	Symbol	Min.	Typ.	Max.	Unit	Test Conditions
Reprogram/erase cycle*1	N_{pec}	1000	—	—	Times	
Data hold time	t_{DRP}	30*2	—	—	Year	Ta = +85°C

Note 1. Definition of reprogram/erase cycle:
The reprogram/erase cycle is the number of erasing for each block. When the reprogram/erase cycle is n times (n = 1000), erasing can be performed n times for each block. For instance, when 128-byte programming is performed 16 times for different addresses in 2-Kbyte block and then the entire block is erased, the reprogram/erase cycle is counted as one. However, programming the same address for several times as one erasing is not enabled (overwriting is prohibited).
Note 2. The value is obtained from the reliability test.

Table 6.21 ROM (Flash Memory for Code Storage) Characteristics (2)

Conditions: VCC = 2.7 to 3.6 V, VSS = AVSS0 = VREFL0 = 0 V,
AVCC0 = 3.0 to 3.6 V, VREFH0 = 3.0 V to AVCC0,
Temperature range for the programming/erasure operation: $T_a = T_{opr}$. T_a is common to conditions 1 to 3.

Item		Symbol	min	typ	max	Unit	Test Conditions
Programming time	128 bytes	t_{P128}	—	1	10	ms	FCLK = 50MHz $N_{PEC} \leq 100$
	4 Kbytes	t_{P4K}	—	23	50	ms	
	16 Kbytes	t_{P16K}	—	90	200	ms	
	128 bytes	t_{P128}	—	1.2	12	ms	FCLK=50MHz $N_{PEC} > 100$
	4 Kbytes	t_{P4K}	—	27.6	60	ms	
	16 Kbytes	t_{P16K}	—	108	240	ms	
Erasure time	4 Kbytes	t_{E4K}	—	25	60	ms	FCLK=50MHz $N_{PEC} \leq 100$
	16 Kbytes	t_{E16K}	—	100	240	ms	
	4 Kbytes	t_{E4K}	—	30	72	ms	FCLK=50MHz $N_{PEC} > 100$
	16 Kbytes	t_{E16K}	—	120	288	ms	
Suspend delay time during programming		t_{SPD}	—	—	120	μs	Figure 6.31 FCLK = 50MHz
First suspend delay time during erasing (in suspend priority mode)		t_{SESD1}	—	—	120	μs	
Second suspend delay time during erasing (in suspend priority mode)		t_{SESD2}	—	—	1.7	ms	
Suspend delay time during erasing (in erasure priority mode)		t_{SEED}	—	—	1.7	ms	
FCU reset time		t_{FCUR}	35	—	—	μs	

Downloaded from Arrow.com.

6.8 E2 DataFlash Characteristic

Table 6.22 E2 DataFlash (Flash Memory for Data Storage) Characteristics (1)

Conditions: VCC = 2.7 to 3.6 V, VSS = AVSS0 = VREFL0 = 0 V
AVCC0 = 3.0 to 3.6 V, VREFH0 = 3.0 V to AVCC0
Temperature range for the programming/erasure operation: $T_a = T_{opr}$. T_a is common to conditions 1 to 3.

Item	Symbol	Min.	Typ.	Max.	Unit	Test Conditions
Reprogram/erase cycle*1	N_{DPEC}	100000	—	—	Times	
Data hold time	t_{DDRP}	30*2	—	—	Year	Ta = +85°C

Note 1. Definition of reprogram/erase cycle:
The reprogram/erase cycle is the number of erasing for each block. When the reprogram/erase cycle is n times (n = 1000), erasing can be performed n times for each block. For instance, when 128-byte programming is performed 16 times for different addresses in 2-Kbyte block and then the entire block is erased, the reprogram/erase cycle is counted as one. However, programming the same address for several times as one erasing is not enabled (overwriting is prohibited).
Note 2. The value is obtained from the reliability test.

Table 6.23 E2 DataFlash (Flash Memory for Data Storage) Characteristics (2)

Conditions: VCC = 2.7 to 3.6 V, VSS = AVSS0 = VREFL0 = 0 V,
AVCC0 = 3.0 to 3.6 V, VREFH0 = 3.0 V to AVCC0,
$Ta = T_{opr}$

Item		Symbol	min	typ	max	Unit	Test Condition
Programming time	2 bytes	t_{DP2}	—	0.25	2	ms	FCLK = 50 MHz
Erasure time	32 bytes	t_{DE32}	—	2	20	ms	FCLK = 50 MHz $N_{DPEC} \leq 100$
	32 bytes	t_{DE32}	—	4	20	ms	FCLK = 50 MHz $N_{DPEC} > 100$
Blank check time	2 bytes	t_{DBC2}	—	—	30	μs	FCLK = 50 MHz
Suspend delay time during programming		t_{DSPD}	—	—	120	μs	Figure 6.31 PCLKB = 50 MHz
First suspend delay time during erasing (in suspend priority mode)		t_{DSESD1}	—	—	120	μs	
Second suspend delay time during erasing (in suspend priority mode)		t_{DSESD2}	—	—	300	μs	
Suspend delay time during erasing (in erasure priority mode)		t_{DSEED}	—	—	300	μs	

Downloaded from Arrow.com.

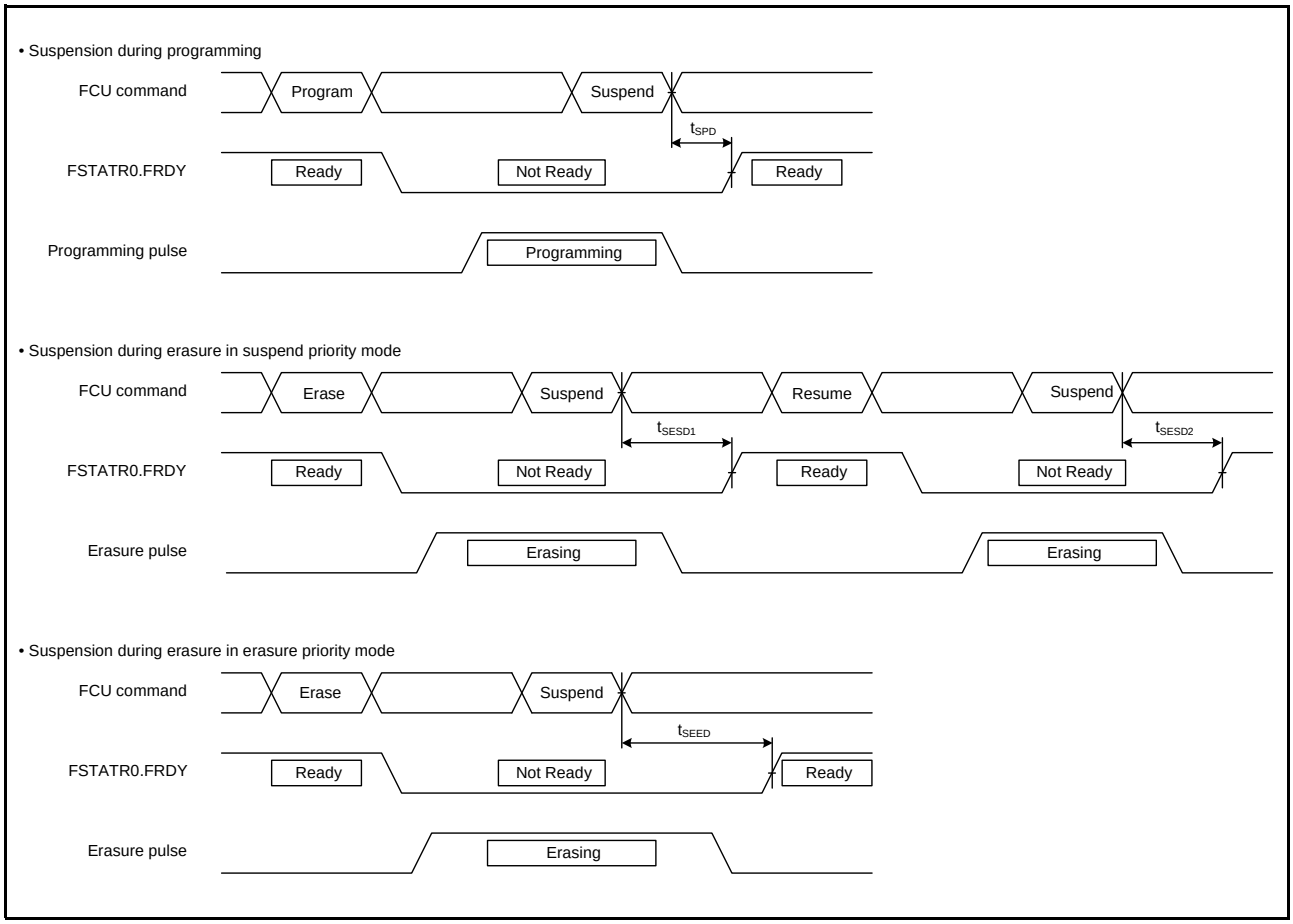

Figure 6.31 Flash Memory Program/Erase Suspend Timing

Downloaded from Arrow.com.

Appendix 1. Package Dimensions

Information on the latest version of the package dimensions or mountings has been displayed in “Packages” on Renesas Electronics Corporation website.

JEITA Package Code	RENESAS Code	Previous Code	MASS[Typ.]
P-LQFP144-20x20-0.50	PLQP0144KA-A	144P6Q-A / FP-144L / FP-144LV	1.2g

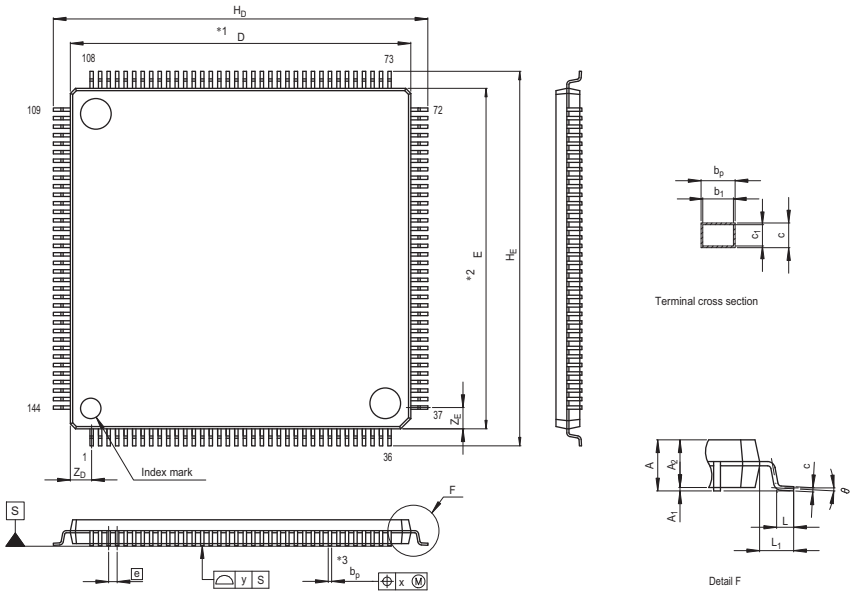

NOTE)
1. DIMENSIONS "*1" AND "*2" DO NOT INCLUDE MOLD FLASH.
2. DIMENSION "*3" DOES NOT INCLUDE TRIM OFFSET.

Reference Symbol	Dimension in Millimeters		
	Min	Nom	Max
D	19.9	20.0	20.1
E	19.9	20.0	20.1
A_2	—	1.4	—
H_D	21.8	22.0	22.2
H_E	21.8	22.0	22.2
A	—	—	1.7
A_1	0.05	0.1	0.15
b_p	0.17	0.22	0.27
b_1	—	0.20	—
c	0.09	0.145	0.20
c_1	—	0.125	—
θ	0°	—	8°
e	—	0.5	—
x	—	—	0.08
y	—	—	0.10
Z_D	—	1.25	—
Z_E	—	1.25	—
L	0.35	0.5	0.65
L_1	—	1.0	—

Figure A 144-Pin LQFP (PLQP0144KA-A)

Downloaded from Arrow.com.

JEITA Package Code	RENESAS Code	Previous Code	MASS[Typ.]
P-LQFP120-16x16-0.50	PLQP0120KA-A	—	0.9g

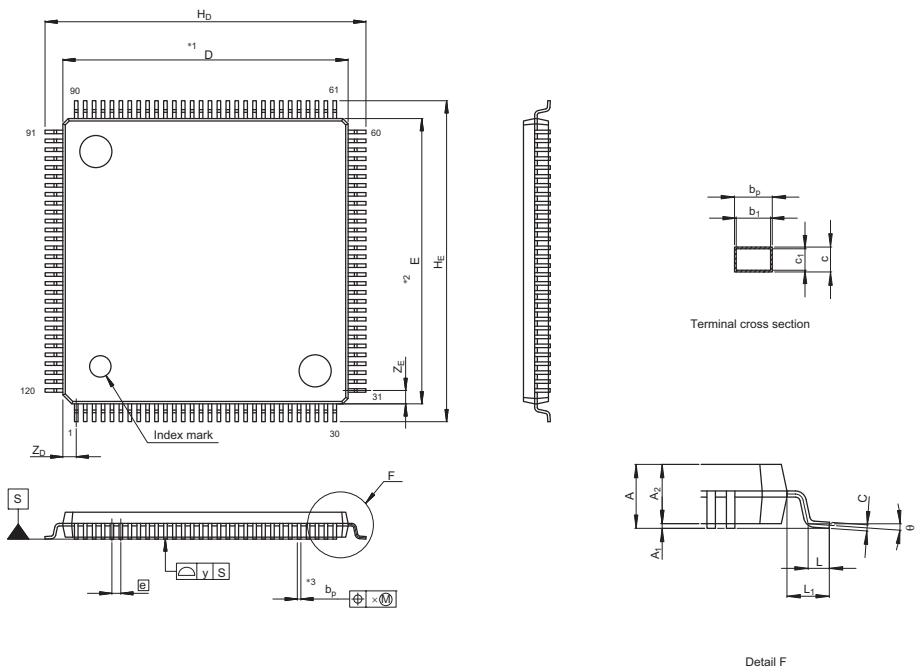

NOTE)
1. DIMENSIONS "*1" AND "*2" DO NOT INCLUDE MOLD FLASH.
2. DIMENSION "*3" DOES NOT INCLUDE TRIM OFFSET.

Reference Symbol	Dimension in Millimeters		
	Min	Nom	Max
D	15.9	16.0	16.1
E	15.9	16.0	16.1
A_2	—	1.4	—
H_D	17.8	18.0	18.2
H_E	17.8	18.0	18.2
A	—	—	1.7
A_1	0.05	0.1	0.15
b_p	0.17	0.22	0.27
b_1	—	0.20	—
c	0.09	0.145	0.20
c_1	—	0.125	—
θ	0°	—	8°
e	—	0.5	—
x	—	—	0.08
y	—	—	0.08
Z_D	—	0.75	—
Z_E	—	0.75	—
L	0.35	0.5	0.65
L_1	—	1.0	—

Figure B 120-Pin LQFP (PLQP0120KA-A)

Downloaded from Arrow.com.

JEITA Package Code	RENESAS Code	Previous Code	MASS[Typ.]
P-LQFP112-20x20-0.65	PLQP0112JA-A	FP-112E/FP-112EV	1.2g

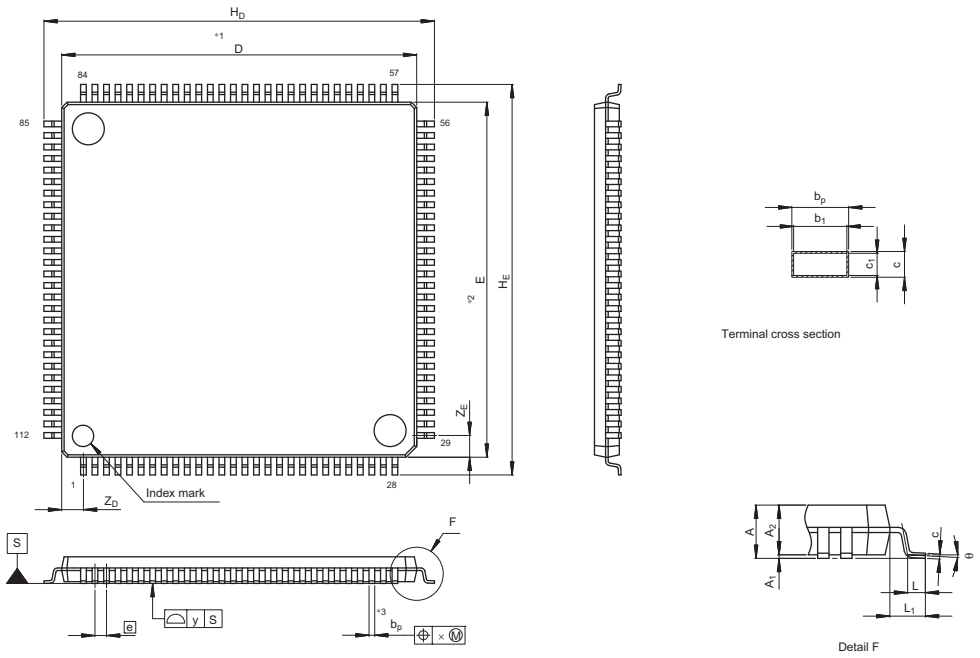

NOTE)
1. DIMENSIONS "*1" AND "*2" DO NOT INCLUDE MOLD FLASH.
2. DIMENSION "*3" DOES NOT INCLUDE TRIM OFFSET.

Reference Symbol	Dimension in Millimeters		
	Min	Nom	Max
D	19.9	20.0	20.1
E	19.9	20.0	20.1
A_2	—	1.4	—
H_D	21.8	22.0	22.2
H_E	21.8	22.0	22.2
A	—	—	1.7
A_1	0.05	0.1	0.15
b_p	0.27	0.32	0.37
b_1	—	0.30	—
c	0.09	0.145	0.20
c_1	—	0.125	—
θ	0°	—	8°
e	—	0.65	—
x	—	—	0.13
y	—	—	0.10
Z_D	—	1.225	—
Z_E	—	1.225	—
L	0.35	0.5	0.65
L_1	—	1.0	—

Figure C 112-Pin LQFP (PLQP0112JA-A)

Downloaded from Arrow.com.

JEITA Package Code	RENESAS Code	Previous Code	MASS[Typ.]
P-LQFP100-14x14-0.50	PLQP0100KB-A	100P6Q-A / FP-100U / FP-100UV	0.6g

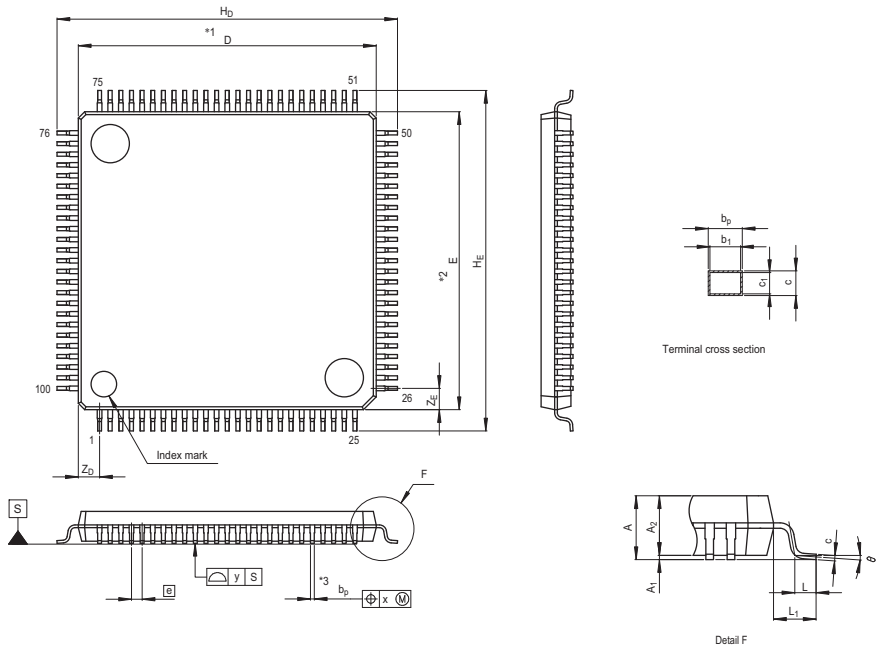

NOTE)
1. DIMENSIONS "*1" AND "*2" DO NOT INCLUDE MOLD FLASH.
2. DIMENSION "*3" DOES NOT INCLUDE TRIM OFFSET.

Reference Symbol	Dimension in Millimeters		
	Min	Nom	Max
D	13.9	14.0	14.1
E	13.9	14.0	14.1
A_2	—	1.4	—
H_D	15.8	16.0	16.2
H_E	15.8	16.0	16.2
A	—	—	1.7
A_1	0.05	0.1	0.15
b_p	0.15	0.20	0.25
b_1	—	0.18	—
c	0.09	0.145	0.20
c_1	—	0.125	—
θ	0°	—	8°
e	—	0.5	—
x	—	—	0.08
y	—	—	0.08
Z_D	—	1.0	—
Z_E	—	1.0	—
L	0.35	0.5	0.65
L_1	—	1.0	—

Figure D 100-Pin LQFP (PLQP0100KB-A)

Downloaded from Arrow.com.

JEITA Package Code	RENESAS Code	Previous Code	MASS[Typ.]
P-LQFP64-10x10-0.50	PLQP0064KB-A	64P6Q-A / FP-64K / FP-64KV	0.3g

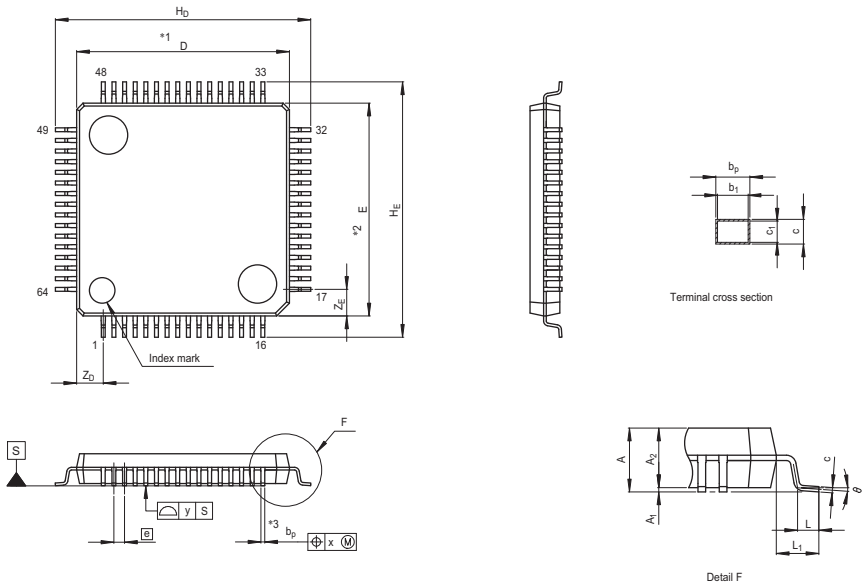

NOTE)
1. DIMENSIONS "*1" AND "*2" DO NOT INCLUDE MOLD FLASH.
2. DIMENSION "*3" DOES NOT INCLUDE TRIM OFFSET.

Reference Symbol	Dimension in Millimeters		
	Min	Nom	Max
D	9.9	10.0	10.1
E	9.9	10.0	10.1
A_2	—	1.4	—
H_D	11.8	12.0	12.2
H_E	11.8	12.0	12.2
A	—	—	1.7
A_1	0.05	0.1	0.15
b_p	0.15	0.20	0.25
b_1	—	0.18	—
c	0.09	0.145	0.20
c_1	—	0.125	—
θ	0°	—	8°
e	—	0.5	—
x	—	—	0.08
y	—	—	0.08
Z_D	—	1.25	—
Z_E	—	1.25	—
L	0.35	0.5	0.65
L_1	—	1.0	—

Figure E 64-Pin LQFP (PLQP0064KB-A)

Downloaded from Arrow.com.

JEITA Package Code	RENESAS Code	Previous Code	MASS[Typ.]
P-LQFP48-7x7-0.50	PLQP0048KB-A	48P6Q-A	0.2g

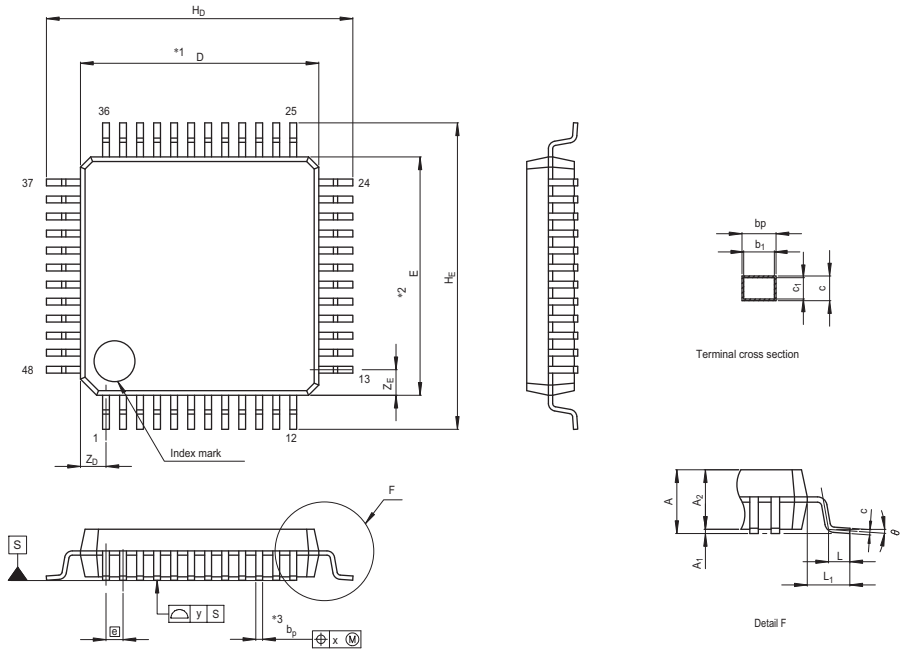

NOTE)
1. DIMENSIONS "*1" AND "*2" DO NOT INCLUDE MOLD FLASH.
2. DIMENSION "*3" DOES NOT INCLUDE TRIM OFFSET.

Reference Symbol	Dimension in Millimeters		
	Min	Nom	Max
D	6.9	7.0	7.1
E	6.9	7.0	7.1
A_2	—	1.4	—
H_D	8.8	9.0	9.2
H_E	8.8	9.0	9.2
A	—	—	1.7
A_1	0	0.1	0.2
b_p	0.17	0.22	0.27
b_1	—	0.20	—
c	0.09	0.145	0.20
c_1	—	0.125	—
θ	0°	—	8°
e	—	0.5	—
x	—	—	0.08
y	—	—	0.10
Z_D	—	0.75	—
Z_E	—	0.75	—
L	0.35	0.5	0.65
L_1	—	1.0	—

Figure F 48-Pin LQFP (PLQP0048KB-A)

Downloaded from Arrow.com.

REVISION HISTORY	RX63T Group Datasheet

Rev.	Date	Description	
		Page	Summary
1.00	Aug 28, 2012	—	First Edition issued
2.00	Mar 11, 2013	Features	
		1	Changed
		1. Overview	
		2	1.1 Outline of Specifications, description changed
		2 to 8	Table 1.1 Outline of Specifications, changed
		9	Table 1.2 Comparison of Functions for Different Packages, changed
		10 to 12	Table 1.3 List of Products, changed
		12	Figure 1.1 How to Read the Product Part Number, changed
		13	Figure 1.2 Block Diagram, changed
		14 to 18	Table 1.4 Pin Functions, changed
		19	Figure 1.3 Pin Assignment (144-Pin LQFP), added
		20	Figure 1.4 Pin Assignment (120-Pin LQFP), added
		21	Figure 1.5 Pin Assignment (112-Pin LQFP), added
		22	Figure 1.6 Pin Assignment (100-Pin LQFP), added
		23	Figure 1.7 Pin Assignment (64-Pin LQFP), notes changed
		24	Figure 1.8 Pin Assignment (48-Pin LQFP), notes changed
		25 to 28	Table 1.5 List of Pins and Pin Functions (144-Pin LQFP), added
		29 to 32	Table 1.6 List of Pins and Pin Functions (120-Pin LQFP), added
		33 to 36	Table 1.7 List of Pins and Pin Functions (112-Pin LQFP), added
		37 to 39	Table 1.8 List of Pins and Pin Functions (100-Pin LQFP), added
		3. Address Space	
		49	Figure 3.1 Memory Map in Each Operating Mode, changed
		50	3.2 External Address Space, added
		4. I/O Registers	
		52	(3) Number of Access Cycles to I/O Registers, description changed
		53 to 103	Table 4.1 List of I/O Registers (Address Order), changed
		5. Electrical Characteristics [144-, 120-, 112- and 100-Pin Versions]	
		104 to 148	Added
		6. Electrical Characteristics [64- and 48-Pin Versions]	
		149	Title changed
		152	Table 6.6 Clock Timing, changed
		158	Table 6.10 Timing of On-Chip Peripheral Modules (1), changed
		160	Table 6.12 Timing of On-Chip Peripheral Modules (3), changed
		170	6.6 Oscillation Stop Detection Circuit Characteristics, title changed
		170	Table 6.18 Oscillation Stop Detection Circuit Characteristics, title changed
		171	Table 6.19 ROM (Flash Memory for Code Storage) Characteristics (1), added
		171	Table 6.20 ROM (Flash Memory for Code Storage) Characteristics (2), title and description changed
		172	Table 6.21 DataFlash (Flash Memory for Data Storage) Characteristics (1), added
		172	Table 6.22 DataFlash (Flash Memory for Data Storage) Characteristics (2), title and description changed
		Appendix 1. Package Dimensions	
		174 to 177	Figure A 144-Pin LQFP (PLQP0144KA-A) to Figure D 100-Pin LQFP (PLQP0100KB-A), added
2.10	Sep 26, 2013	The RX63T Group and RX63T changed to this MCU	
		Features	
		1	Changed
		1. Overview	
		2 to 8	Table 1.1 Outline of Specifications, changed, Note 1, added.
		9	Table 1.2 Comparison of Functions for Different Packages, changed, Note 2, added.
		10 to 14	Table 1.3 List of Products, changed, Note 1, added
		15	Figure 1.1 How to Read the Product Part Number, changed
		28 to 31	Table 1.5 List of Pins and Pin Functions (144-Pin LQFP), changed
		32 to 35	Table 1.6 List of Pins and Pin Functions (120-Pin LQFP), changed

Downloaded from Arrow.com.

Rev.	Date	Description	
		Page	Summary
2.10	Sep 26, 2013	36 to 39	Table 1.7 List of Pins and Pin Functions (112-Pin LQFP), changed
		40 to 42	Table 1.8 List of Pins and Pin Functions (100-Pin LQFP), changed
		43 to 45	Table 1.9 List of Pins and Pin Functions (64-Pin LQFP), changed
		46 to 47	Table 1.10 List of Pins and Pin Functions (48-Pin LQFP), changed
		4. I/O Registers	
		56 to 103	Table 4.1 List of I/O Registers (Address Order), changed
		5. Electrical Characteristics [144-, 120-, 112- and 100-Pin Versions]	
		104	Table 5.1 Absolute Maximum Ratings, changed
		107	Table 5.4 DC Characteristics (3), Note 7, deleted
		108	Table 5.6 Permissible Power Consumption, added
		128	5.3.7 Timing of PWM Delay Generation Circuit, added
		128	Table 42.21 Timing of the PWM Delay Generation Circuit, added
		132	Figure 5.32 RSPI Timing (Master, CPHA = 1) (Bit Rate: PCLKB Division Ratio Set to a Value Other Than 1/2) and Simple SPI Timing (Master, CKPH = 1), changed
		133	Figure 5.34 RSPI Timing (Slave, CPHA = 0) and Simple SPI Timing (Slave, CKPH = 0), changed
		134	Figure 5.35 RSPI Timing (Slave, CPHA = 1) and Simple SPI Timing (Slave, CKPH = 1), changed
		6. Electrical Characteristics [64- and 48-Pin Versions]	
		149	Table 6.1 Absolute Maximum Ratings, changed
		151	Table 6.3 DC Characteristics (2), Note 3, changed
		152	Table 6.5 Permissible Power Consumption, added

Downloaded from Arrow.com.

Classifications
- Items with Technical Update document number: Changes according to the corresponding issued Technical Update
- Items without Technical Update document number: Minor changes that do not require Technical Update to be issued

Rev.	Date	Description		Classification
		Page	Summary	
2.20	Mar 31, 2016	1. Overview		
		2 to 8	Table 1.1 Outline of Specifications, Note 1 changed	TN-RX*-A086A/E
		10 to 13	Table 1.3 List of Products, changed	TN-RX*-A086A/E
		16	Table 1.4 Pin Functions, changed	
		27 to 30	Table 1.5 List of Pins and Pin Functions (144-Pin LQFP), changed	
		30	Table 1.5 List of Pins and Pin Functions (144-Pin LQFP), Note 1 added	
		31 to 34	Table 1.6 List of Pins and Pin Functions (120-Pin LQFP), changed	
		35 to 38	Table 1.7 List of Pins and Pin Functions (112-Pin LQFP), changed	
		38	Table 1.7 List of Pins and Pin Functions (112-Pin LQFP), Note 1 added	
		4. I/O Registers		
		54	(4) Notes on Sleep Mode and Mode Transition, added	TN-RX*-A140A/E
		55 to 102	Table 4.1 List of I/O Registers (Address Order), changed	TN-RX*-A086A/E, TN-RX*-A140A/E
		5. Electrical Characteristics [144-, 120-, 112- and 100-Pin Versions]		
		103	Table 5.1 Absolute Maximum Ratings, changed	TN-RX*-A086A/E
		106	Table 5.4 DC Characteristics (3), changed	
		107	Table 5.5 Permissible Output Currents, changed	
		108	Table 5.6 Permissible Power Consumption (G version product only), title changed, notes added	TN-RX*-A086A/E
		111	Table 5.9 Clock Timing, changed	TN-RX*-A097A/E
		112	Figure 5.6 LOCO, IWDTCLK Clock Oscillation Start Timing, title changed	TN-RX*-A097A/E
		112	Figure 5.6 LOCO, IWDTCLK Clock Oscillation Start Timing, changed	TN-RX*-A097A/E
		124	Table 5.16 Timing of On-Chip Peripheral Modules (1), changed	TN-RX*-A121A/E
		125	Table 5.16 Timing of On-Chip Peripheral Modules (2), changed	TN-RX*-A121A/E
		126	Table 5.16 Timing of On-Chip Peripheral Modules (3), changed	TN-RX*-A121A/E
		127	Table 5.16 Timing of On-Chip Peripheral Modules (4), changed	
		129	Table 5.17 Timing of the PWM Delay Generation Circuit	TN-RX*-A086A/E
		132	Figure 5.30 RSPI Timing (Master, CPHA = 0) (Bit Rate: PCLKB Division Ratio Set to a Value Other Than 1/2) and Simple SPI Timing (Master, CKPH = 1), title and figure changed	
		133	Figure 5.32 RSPI Timing (Master, CPHA = 1) (Bit Rate: PCLKB Division Ratio Set to a Value Other Than 1/2) and Simple SPI Timing (Master, CKPH = 0), title changed	
		134	Figure 5.34 RSPI Timing (Slave, CPHA = 0) and Simple SPI Timing (Slave, CKPH = 1), title changed	
		135	Figure 5.35 RSPI Timing (Slave, CPHA = 1) and Simple SPI Timing (Slave, CKPH = 0), title changed	
		136	Table 5.18 On-Chip USB Full-Speed Characteristics (DP and DM Pin Characteristics), Condition 1, 2 changed	TN-RX*-A086A/E
		143	Table 5.26 Power-on Reset Circuit and Voltage Detection Circuit Characteristics (1), changed	
		6. Electrical Characteristics [64- and 48-Pin Versions]		
		150	Table 6.1 Absolute Maximum Ratings, changed	TN-RX*-A086A/E
		153	Table 6.5 Permissible Power Consumption (G version product only), title changed, note added	TN-RX*-A086A/E
		154	Table 6.7 Clock Timing, changed	TN-RX*-A097A/E
		155	Figure 6.3 LOCO, IWDTCLK Clock Oscillation Start Timing, title changed	TN-RX*-A097A/E
		155	Figure 6.3 LOCO, IWDTCLK Clock Oscillation Start Timing, changed	TN-RX*-A097A/E
		161	Table 6.12 Timing of On-Chip Peripheral Modules (2), changed	
		170	Table 6.18 Power-on Reset Circuit and Voltage Detection Circuit Characteristics, changed	

Downloaded from Arrow.com.

General Precautions in the Handling of Microprocessing Unit and Microcontroller Unit Products

The following usage notes are applicable to all Microprocessing unit and Microcontroller unit products from Renesas. For detailed usage notes on the products covered by this document, refer to the relevant sections of the document as well as any technical updates that have been issued for the products.

1. Handling of Unused Pins

   Handle unused pins in accordance with the directions given under Handling of Unused Pins in the manual.

   ¾ The input pins of CMOS products are generally in the high-impedance state. In operation with an unused pin in the open-circuit state, extra electromagnetic noise is induced in the vicinity of LSI, an associated shoot-through current flows internally, and malfunctions occur due to the false recognition of the pin state as an input signal become possible. Unused pins should be handled as described under Handling of Unused Pins in the manual.

2. Processing at Power-on

   The state of the product is undefined at the moment when power is supplied.

   ¾ The states of internal circuits in the LSI are indeterminate and the states of register settings and pins are undefined at the moment when power is supplied.
   In a finished product where the reset signal is applied to the external reset pin, the states of pins are not guaranteed from the moment when power is supplied until the reset process is completed.
   In a similar way, the states of pins in a product that is reset by an on-chip power-on reset function are not guaranteed from the moment when power is supplied until the power reaches the level at which resetting has been specified.

3. Prohibition of Access to Reserved Addresses

   Access to reserved addresses is prohibited.

   ¾ The reserved addresses are provided for the possible future expansion of functions. Do not access these addresses; the correct operation of LSI is not guaranteed if they are accessed.

4. Clock Signals

   After applying a reset, only release the reset line after the operating clock signal has become stable. When switching the clock signal during program execution, wait until the target clock signal has stabilized.

   ¾ When the clock signal is generated with an external resonator (or from an external oscillator) during a reset, ensure that the reset line is only released after full stabilization of the clock signal. Moreover, when switching to a clock signal produced with an external resonator (or by an external oscillator) while program execution is in progress, wait until the target clock signal is stable.

5. Differences between Products

   Before changing from one product to another, i.e. to a product with a different part number, confirm that the change will not lead to problems.

   ¾ The characteristics of Microprocessing unit or Microcontroller unit products in the same group but having a different part number may differ in terms of the internal memory capacity, layout pattern, and other factors, which can affect the ranges of electrical characteristics, such as characteristic values, operating margins, immunity to noise, and amount of radiated noise. When changing to a product with a different part number, implement a system-evaluation test for the given product.

Downloaded from Arrow.com.

Notice

1. Descriptions of circuits, software and other related information in this document are provided only to illustrate the operation of semiconductor products and application examples. You are fully responsible for the incorporation of these circuits, software, and information in the design of your equipment. Renesas Electronics assumes no responsibility for any losses incurred by you or third parties arising from the use of these circuits, software, or information.
2. Renesas Electronics has used reasonable care in preparing the information included in this document, but Renesas Electronics does not warrant that such information is error free. Renesas Electronics assumes no liability whatsoever for any damages incurred by you resulting from errors in or omissions from the information included herein.
3. Renesas Electronics does not assume any liability for infringement of patents, copyrights, or other intellectual property rights of third parties by or arising from the use of Renesas Electronics products or technical information described in this document. No license, express, implied or otherwise, is granted hereby under any patents, copyrights or other intellectual property rights of Renesas Electronics or others.
4. You should not alter, modify, copy, or otherwise misappropriate any Renesas Electronics product, whether in whole or in part. Renesas Electronics assumes no responsibility for any losses incurred by you or third parties arising from such alteration, modification, copy or otherwise misappropriation of Renesas Electronics product.
5. Renesas Electronics products are classified according to the following two quality grades: "Standard" and "High Quality". The recommended applications for each Renesas Electronics product depends on the product's quality grade, as indicated below.
   "Standard": Computers; office equipment; communications equipment; test and measurement equipment; audio and visual equipment; home electronic appliances; machine tools; personal electronic equipment; and industrial robots etc.
   "High Quality": Transportation equipment (automobiles, trains, ships, etc.); traffic control systems; anti-disaster systems; anti-crime systems; and safety equipment etc.
   Renesas Electronics products are neither intended nor authorized for use in products or systems that may pose a direct threat to human life or bodily injury (artificial life support devices or systems, surgical implantations etc.), or may cause serious property damages (nuclear reactor control systems, military equipment etc.). You must check the quality grade of each Renesas Electronics product before using it in a particular application. You may not use any Renesas Electronics product for any application for which it is not intended. Renesas Electronics shall not be in any way liable for any damages or losses incurred by you or third parties arising from the use of any Renesas Electronics product for which the product is not intended by Renesas Electronics.
6. You should use the Renesas Electronics products described in this document within the range specified by Renesas Electronics, especially with respect to the maximum rating, operating supply voltage range, movement power voltage range, heat radiation characteristics, installation and other product characteristics. Renesas Electronics shall have no liability for malfunctions or damages arising out of the use of Renesas Electronics products beyond such specified ranges.
7. Although Renesas Electronics endeavors to improve the quality and reliability of its products, semiconductor products have specific characteristics such as the occurrence of failure at a certain rate and malfunctions under certain use conditions. Further, Renesas Electronics products are not subject to radiation resistance design. Please be sure to implement safety measures to guard them against the possibility of physical injury, and injury or damage caused by fire in the event of the failure of a Renesas Electronics product, such as safety design for hardware and software including but not limited to redundancy, fire control and malfunction prevention, appropriate treatment for aging degradation or any other appropriate measures. Because the evaluation of microcomputer software alone is very difficult, please evaluate the safety of the final products or systems manufactured by you.
8. Please contact a Renesas Electronics sales office for details as to environmental matters such as the environmental compatibility of each Renesas Electronics product. Please use Renesas Electronics products in compliance with all applicable laws and regulations that regulate the inclusion or use of controlled substances, including without limitation, the EU RoHS Directive. Renesas Electronics assumes no liability for damages or losses occurring as a result of your noncompliance with applicable laws and regulations.
9. Renesas Electronics products and technology may not be used for or incorporated into any products or systems whose manufacture, use, or sale is prohibited under any applicable domestic or foreign laws or regulations. You should not use Renesas Electronics products or technology described in this document for any purpose relating to military applications or use by the military, including but not limited to the development of weapons of mass destruction. When exporting the Renesas Electronics products or technology described in this document, you should comply with the applicable export control laws and regulations and follow the procedures required by such laws and regulations.
10. It is the responsibility of the buyer or distributor of Renesas Electronics products, who distributes, disposes of, or otherwise places the product with a third party, to notify such third party in advance of the contents and conditions set forth in this document, Renesas Electronics assumes no responsibility for any losses incurred by you or third parties as a result of unauthorized use of Renesas Electronics products.
11. This document may not be reproduced or duplicated in any form, in whole or in part, without prior written consent of Renesas Electronics.
12. Please contact a Renesas Electronics sales office if you have any questions regarding the information contained in this document or Renesas Electronics products, or if you have any other inquiries.

(Note 1) "Renesas Electronics" as used in this document means Renesas Electronics Corporation and also includes its majority-owned subsidiaries.

(Note 2) "Renesas Electronics product(s)" means any product developed or manufactured by or for Renesas Electronics.

SALES OFFICES Renesas Electronics Corporation http://www.renesas.com

Refer to "http://www.renesas.com/" for the latest and detailed information.

Renesas Electronics America Inc.
2801 Scott Boulevard Santa Clara, CA 95050-2549, U.S.A.
Tel: +1-408-588-6000, Fax: +1-408-588-6130

Renesas Electronics Canada Limited
9251 Yonge Street, Suite 8309 Richmond Hill, Ontario Canada L4C 9T3
Tel: +1-905-237-2004

Renesas Electronics Europe Limited
Dukes Meadow, Millboard Road, Bourne End, Buckinghamshire, SL8 5FH, U.K
Tel: +44-1628-585-100, Fax: +44-1628-585-900

Renesas Electronics Europe GmbH
Arcadiastrasse 10, 40472 Düsseldorf, Germany
Tel: +49-211-6503-0, Fax: +49-211-6503-1327

Renesas Electronics (China) Co., Ltd.
Room 1709, Quantum Plaza, No.27 ZhiChunLu Haidian District, Beijing 100191, P.R.China
Tel: +86-10-8235-1155, Fax: +86-10-8235-7679

Renesas Electronics (Shanghai) Co., Ltd.
Unit 301, Tower A, Central Towers, 555 Langao Road, Putuo District, Shanghai, P. R. China 200333
Tel: +86-21-2226-0888, Fax: +86-21-2226-0999

Renesas Electronics Hong Kong Limited
Unit 1601-1611, 16/F., Tower 2, Grand Century Place, 193 Prince Edward Road West, Mongkok, Kowloon, Hong Kong
Tel: +852-2265-6688, Fax: +852 2886-9022

Renesas Electronics Taiwan Co., Ltd.
13F, No. 363, Fu Shing North Road, Taipei 10543, Taiwan
Tel: +886-2-8175-9600, Fax: +886 2-8175-9670

Renesas Electronics Singapore Pte. Ltd.
80 Bendemeer Road, Unit #06-02 Hyflux Innovation Centre, Singapore 339949
Tel: +65-6213-0200, Fax: +65-6213-0300

Renesas Electronics Malaysia Sdn.Bhd.
Unit 1207, Block B, Menara Amcorp, Amcorp Trade Centre, No. 18, Jln Persiaran Barat, 46050 Petaling Jaya, Selangor Darul Ehsan, Malaysia
Tel: +60-3-7955-9390, Fax: +60-3-7955-9510

Renesas Electronics India Pvt. Ltd.
No.777C, 100 Feet Road, HAL II Stage, Indiranagar, Bangalore, India
Tel: +91-80-67208700, Fax: +91-80-67208777

Renesas Electronics Korea Co., Ltd.
12F., 234 Teheran-ro, Gangnam-Gu, Seoul, 135-080, Korea
Tel: +82-2-558-3737, Fax: +82-2-558-5141

© 2016 Renesas Electronics Corporation. All rights reserved.

Colophon 5.0

Downloaded from Arrow.com.