THIS DRAWING IS UNPUBLISHED. RELEASED FOR PUBLICATION -,- .
© COPYRIGHT – BY TYCO ELECTRONICS CORPORATION. ALL RIGHTS RESERVED.

| LOC | DIST |
|---|---|
| AD | 39 |

REVISIONS

| P | LTR | DESCRIPTION | DATE | DWN | APVD |
|---|---|---|---|---|---|
| | K | REV PER EC 0G3C-0525-04 | 05OCT04 | MB | JO |

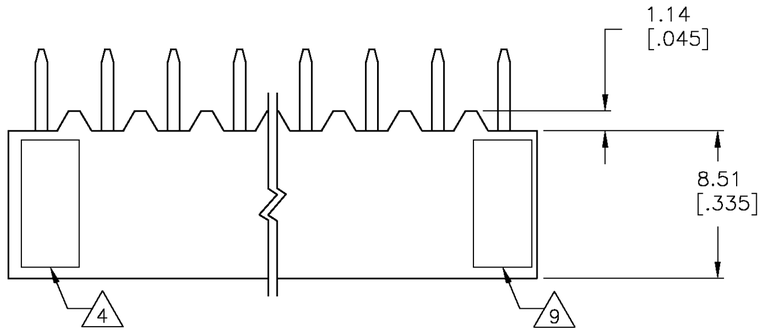


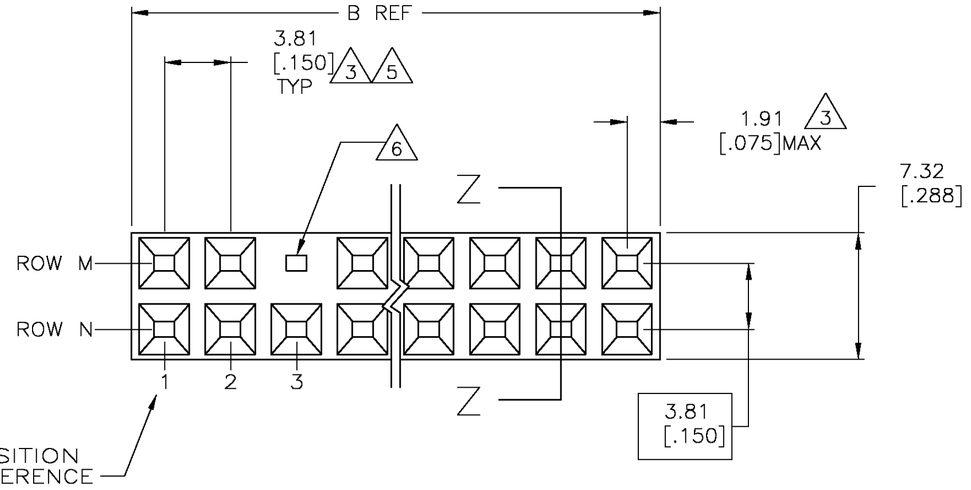


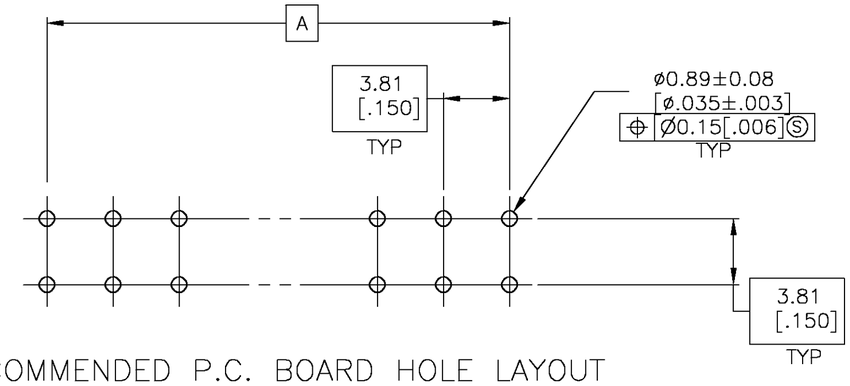


RECOMMENDED P.C. BOARD HOLE LAYOUT

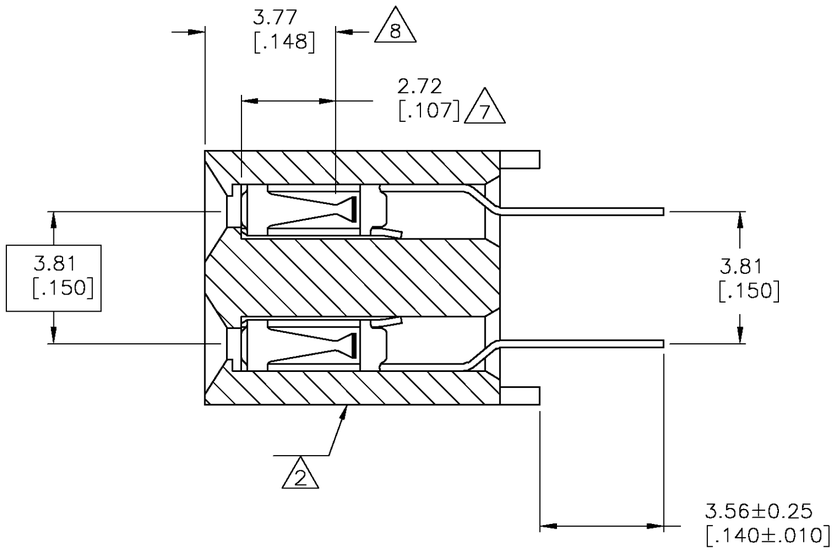


SECTION Z–Z
SCALE 8:1

1. HOUSING: FLAME RETARDANT, GLASS FILLED, THERMOPLASTIC, COLOR: BLACK.
   CONTACT: PHOSPHOR BRONZE
2. CONTACT: DUPLEX PLATED 0.76µm[.000030] GOLD IN CONTACT AREA, 3.81–7.62µm[.000150–.000300] BRIGHT TIN–LEAD ON LEADS ALL OVER 1.27µm[.000050] NICKEL
3. THESE DIMENSIONS PERTAIN TO CAVITIY CENTERLINES ONLY – NOT TO CONTACT LOACATIONS
4. PART NUMBER AND DATE CODE ARE MARKED IN APPROXIMATE LOCATION SHOWN.
5. TOLERANCE IS NON–CUMULATIVE.
6. KEY IN POSITION, NO CONTACT CAVITY.
7. POINT–OF–MEASUREMENT DIMENSION FOR PLATING THICKNESS (INSIDE CONTACT BEAM).
8. POINT–OF–CONTACT DIMENSION.
9. TYCO LOGO AND CSA LOGO ARE MOLDED INTO HOUSING.
10. NO POSITION NUMBER MARKING REQUIRED FOR THIS PART.

| | NO OF ACTV POSN | KEYING POSITION | | B | A | NO OF POSN | PART NUMBER |
|---|---|---|---|---|---|---|---|
| | | ROW M | ROW N | | | | |
| | 12 | 2 | 2 | 26.67 [1.050] | 22.86 [.900] | 14 | 533034–3 |
| OBSOLETE | 15 | 3 | NONE | 30.48 [1.200] | 26.67 [1.050] | 16 | 533034–2 |
| 10 | 6 | NONE | NONE | 11.43 [.450] | 7.62 [.300] | 6 | 533034–1 |

NO CONTACT

THIS DRAWING IS A CONTROLLED DOCUMENT.

DIMENSIONS: mm [INCHES]

TOLERANCES UNLESS OTHERWISE SPECIFIED:
0 PLC ± –
1 PLC ± –
2 PLC ± 0.13 [.005]
3 PLC ± –
4 PLC ± –
ANGLES ± –

MATERIAL 1

FINISH 2

DWN K.L.CLOUSER/UTA 5/31/91
CHK R BENDORF 7/30/91
APVD –
PRODUCT SPEC –
APPLICATION SPEC –
WEIGHT –

Tyco Electronics Corporation
Harrisburg, Pa 17105–3608

NAME
RECEPTACLE ASSY, MOD II, DBL ROW,
3.81 X 3.81 [.150 X .150] CL,
–

| SIZE | CAGE CODE | DRAWING NO | RESTRICTED TO |
|---|---|---|---|
| A2 | 00779 | C–533034 | – |

CUSTOMER DRAWING | SCALE 4:1 | SHEET 1 OF 1 | REV K

533034



Downloaded from Arrow.com.