Synchronous Rectifier Controller

NCP43080

The NCP43080 is a synchronous rectifier controller for switch mode power supplies. The controller enables high efficiency designs for flyback and quasi resonant flyback topologies.

Externally adjustable minimum off-time and on-time blanking periods provides flexibility to drive various MOSFET package types and PCB layout. A reliable and noise less operation of the SR system is insured due to the Self Synchronization feature. The NCP43080 also utilizes Kelvin connection of the driver to the MOSFET to achieve high efficiency operation at full load and utilizes a light load detection architecture to achieve high efficiency at light load.

The precise turn-off threshold, extremely low turn-off delay time and high sink current capability of the driver allow the maximum synchronous rectification MOSFET conduction time. The high accuracy driver and 5 V gate clamp make it ideally suited for directly driving GaN devices.

Features

- Self-Contained Control of Synchronous Rectifier in CCM, DCM and QR for Flyback, Forward or LLC Applications
- Precise True Secondary Zero Current Detection
- Rugged Current Sense Pin (up to 150 V)
- Adjustable Minimum ON-Time
- Adjustable Minimum OFF-Time with Ringing Detection
- Adjustable Maximum ON-Time for CCM Controlling of Primary QR Controller
- Improved Robust Self Synchronization Capability
- 8 A / 4 A Peak Current Sink / Source Drive Capability
- Operating Voltage Range up to V_{CC} = 35 V
- Automatic Light-load & Disable Mode
- Adaptive Gate Drive Clamp
- GaN Transistor Driving Capability (options A and C)
- Low Startup and Disable Current Consumption
- Maximum Operation Frequency up to 1 MHz
- SOIC-8 and DFN-8 (4x4) and WDFN8 (2x2) Packages
- These are Pb-Free Devices

Typical Applications

- Notebook Adapters
- High Power Density AC/DC Power Supplies (Cell Phone Chargers)
- LCD TVs
- All SMPS with High Efficiency Requirements



SOIC-8
D SUFFIX
CASE 751

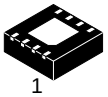

DFN8
MN SUFFIX
CASE 488AF



WDFN8
MT SUFFIX
CASE 511AT

MARKING DIAGRAMS

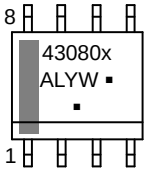

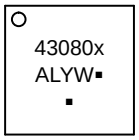

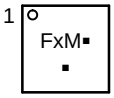

43080x	= Specific Device Code x = A, B, C, D or Q
Fx	= Specific Device Code x = A or D
A	= Assembly Location
L	= Wafer Lot
Y	= Year
W	= Work Week
M	= Date Code
▪	= Pb-Free Package

(Note: Microdot may be in either location)

ORDERING INFORMATION

See detailed ordering and shipping information on page 33 of this data sheet.

NOTE: Some of the devices on this data sheet have been **DISCONTINUED**. Please refer to the table on page 33.

© Semiconductor Components Industries, LLC, 2016

Downloaded from Arrow.com.

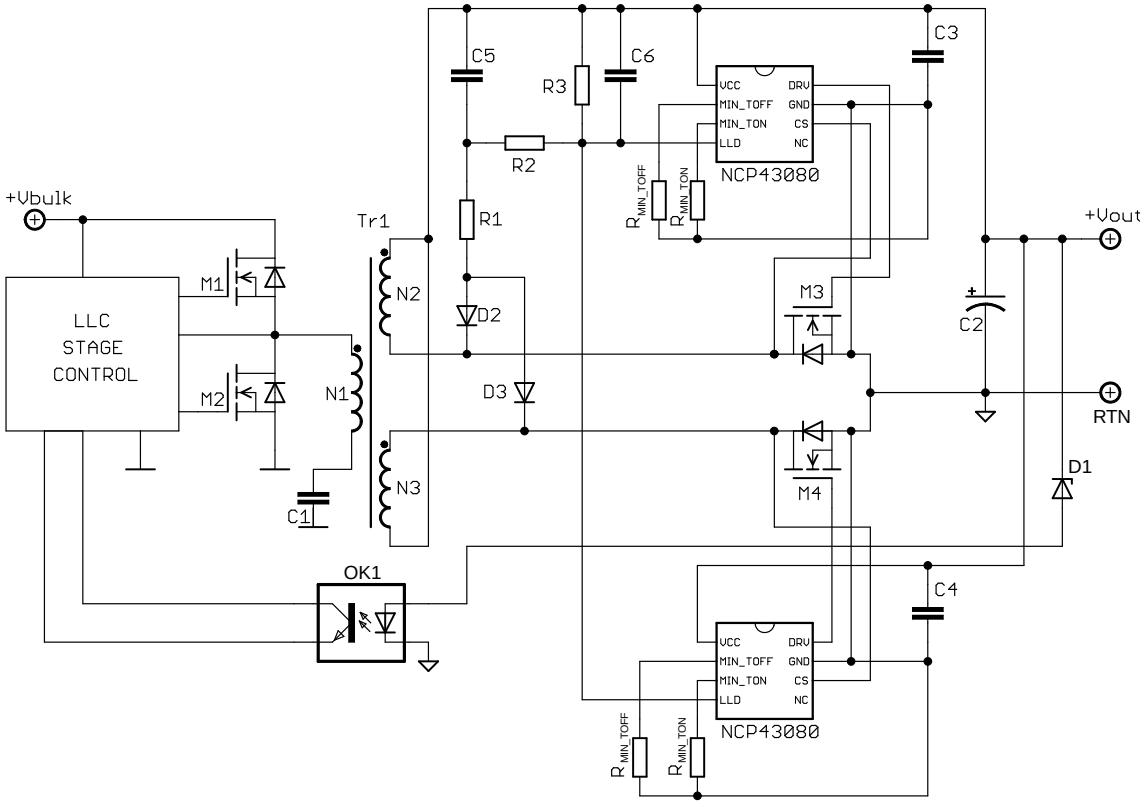

Figure 1. Typical Application Example – LLC Converter with Optional LLD

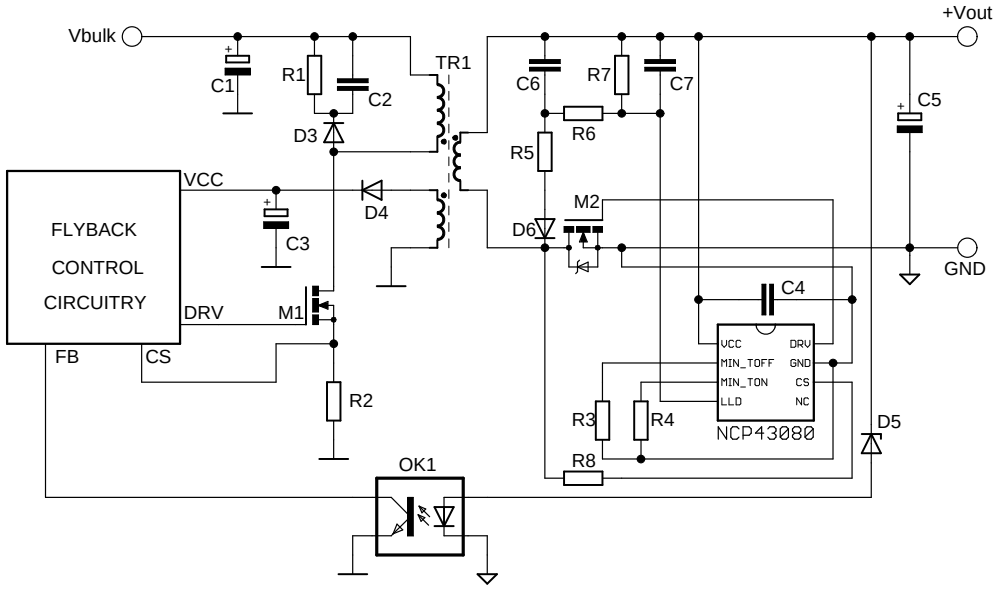

Figure 2. Typical Application Example – DCM, CCM or QR Flyback Converter with optional LLD

Share Feedback
Your Opinion Matters

Downloaded from Arrow.com.

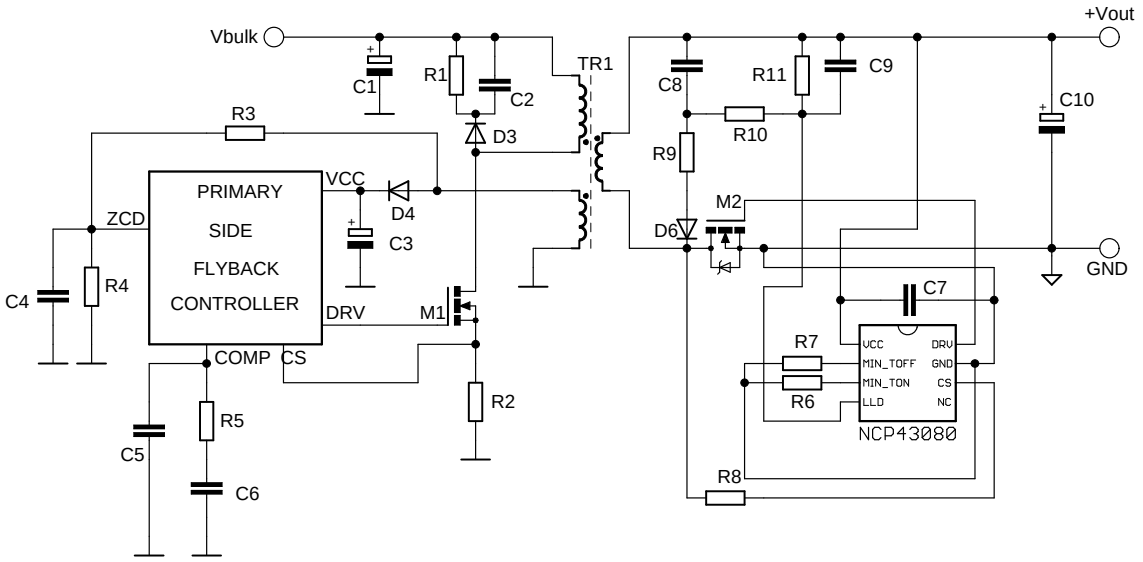

Figure 3. Typical Application Example – Primary Side Flyback Converter with optional LLD

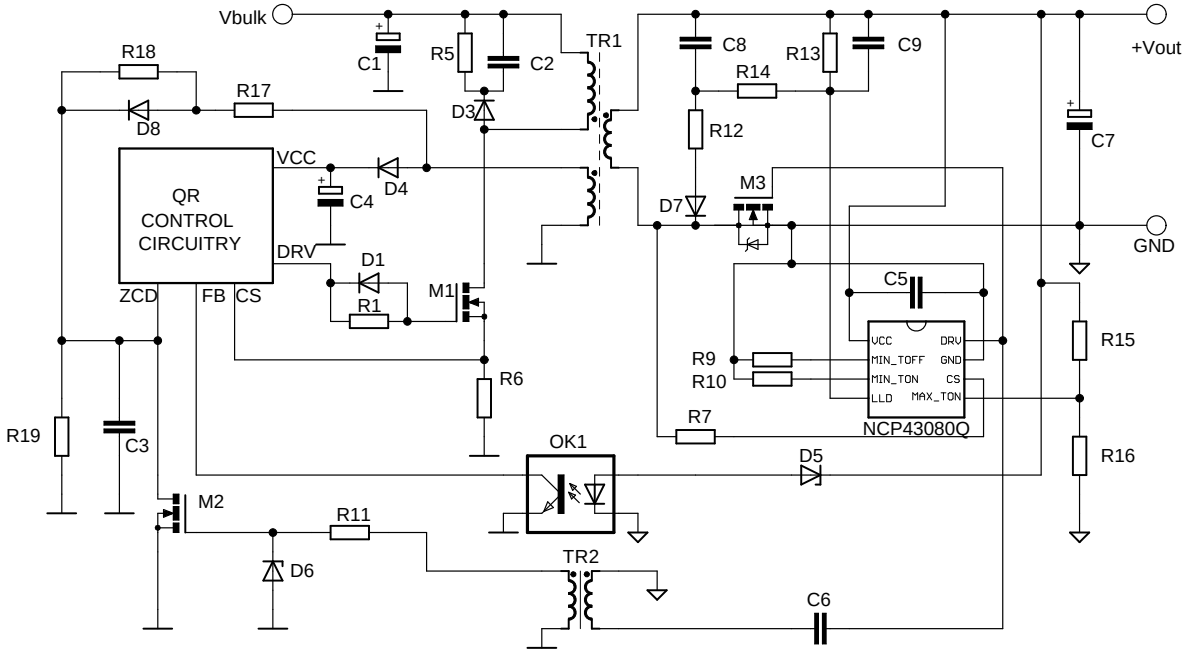

Figure 4. Typical Application Example – QR Converter – Capability to Force Primary into CCM Under Heavy Loads Utilizing MAX-TON

Share Feedback
Your Opinion Matters

Downloaded from Arrow.com.

PIN FUNCTION DESCRIPTION

ver. A, B, C, D	ver. Q	Pin Name	Description
1	1	VCC	Supply voltage pin
2	2	MIN_TOFF	Adjust the minimum off time period by connecting resistor to ground.
3	3	MIN_TON	Adjust the minimum on time period by connecting resistor to ground.
4	4	LLD	This input modulates the driver clamp level and/or turns the driver off during light load conditions.
5	–	NC	Leave this pin opened or tie it to ground.
6	6	CS	Current sense pin detects if the current flows through the SR MOSFET and/or its body diode. Basic turn-off detection threshold is 0 mV. A resistor in series with this pin can decrease the turn off threshold if needed.
7	7	GND	Ground connection for the SR MOSFET driver, V_{CC} decoupling capacitor and for minimum on and off time adjust resistors and LLD input. GND pin should be wired directly to the SR MOSFET source terminal/soldering point using Kelvin connection. DFN8 exposed flag should be connected to GND
8	8	DRV	Driver output for the SR MOSFET
–	5	MAX_TON	Adjust the maximum on time period by connecting resistor to ground.

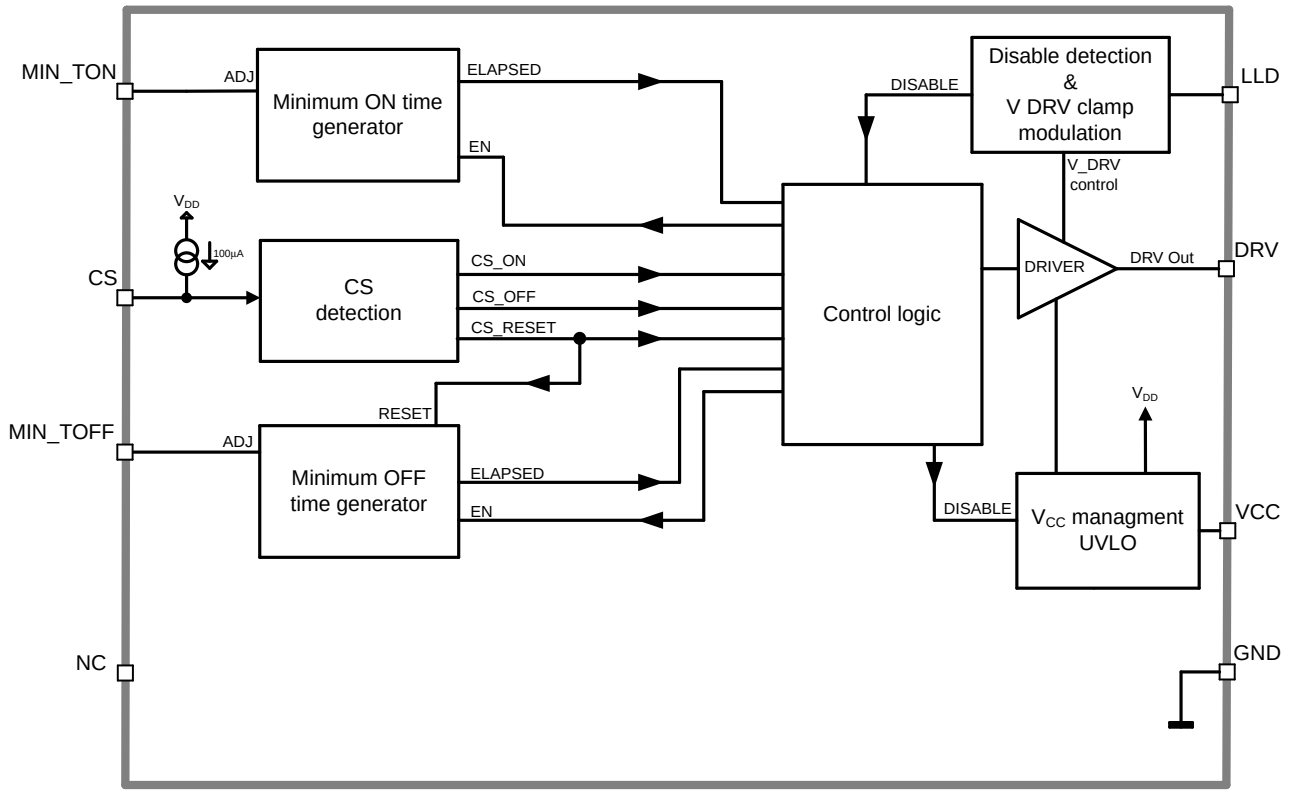

Figure 5. Internal Circuit Architecture – NCP43080A, B, C, D

Share Feedback
Your Opinion Matters

Downloaded from Arrow.com.

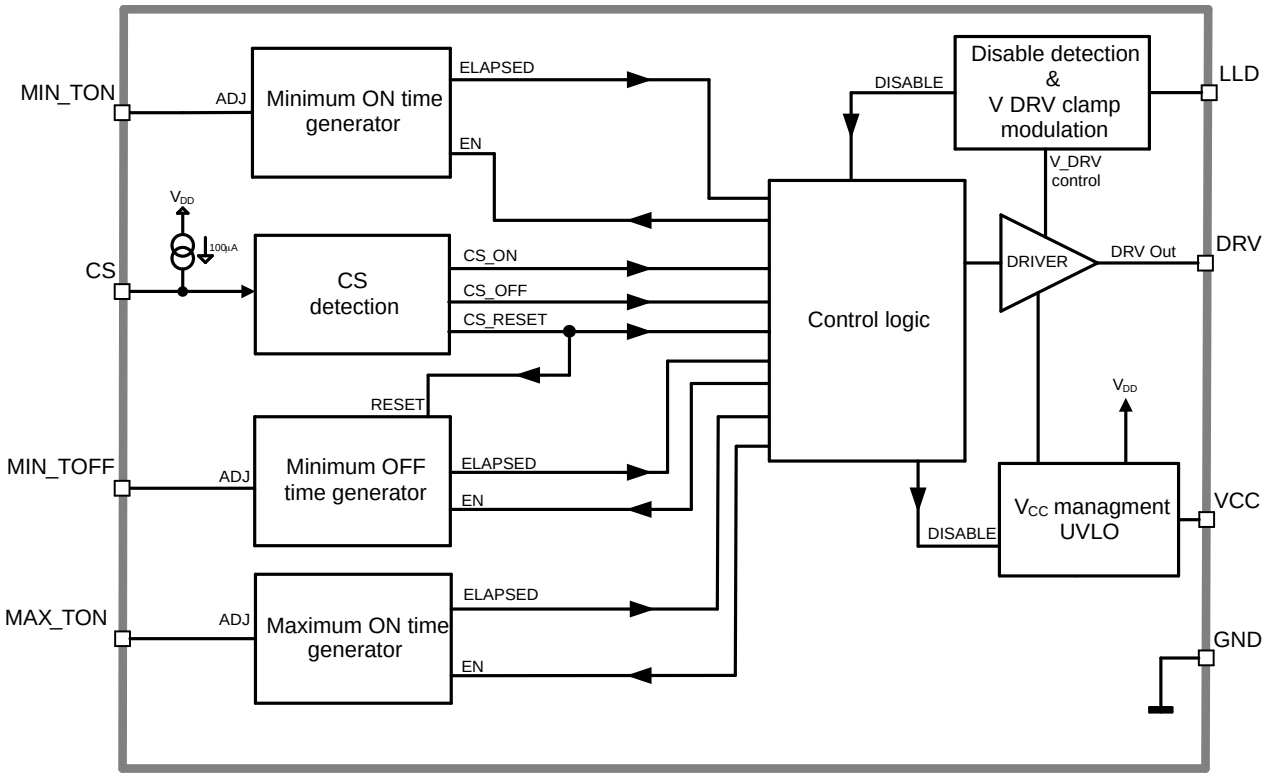

Figure 6. Internal Circuit Architecture – NCP43080Q (CCM QR) with MAX_TON

Share Feedback
Your Opinion Matters

Downloaded from Arrow.com.

ABSOLUTE MAXIMUM RATINGS

Rating	Symbol	Value	Unit
Supply Voltage	V_{CC}	−0.3 to 37.0	V
MIN_TON, MIN_TOFF, MAX_TON, LLD Input Voltage	V_{MIN_TON}, V_{MIN_TOFF}, V_{MAX_TON}, V_{LLD}	−0.3 to V_{CC}	V
Driver Output Voltage	V_{DRV}	−0.3 to 17.0	V
Current Sense Input Voltage	V_{CS}	−4 to 150	V
Current Sense Dynamic Input Voltage (t_{PW} = 200 ns)	V_{CS_DYN}	−10 to 150	V
MIN_TON, MIN_TOFF, MAX_TON, LLD Input Current	I_{MIN_TON}, I_{MIN_TOFF}, I_{MAX_TON}, I_{LLD}	−10 to 10	mA
Junction to Air Thermal Resistance, 1 oz 1 in^2 Copper Area, SOIC8	$R_{\theta J\text{-}A_SOIC8}$	160	°C/W
Junction to Air Thermal Resistance, 1 oz 1 in^2 Copper Area, DFN8	$R_{\theta J\text{-}A_DFN8}$	80	°C/W
Junction to Air Thermal Resistance, 1 oz 1 in^2 Copper Area, WDFN8	$R_{\theta J\text{-}A_WDFN8}$	160	°C/W
Maximum Junction Temperature	T_{JMAX}	150	°C
Storage Temperature	T_{STG}	−60 to 150	°C
ESD Capability, Human Body Model, Except Pin 6, per JESD22-A114E	ESD_{HBM}	2000	V
ESD Capability, Human Body Model, Pin 6, per JESD22-A114E	ESD_{HBM}	1000	V
ESD Capability, Machine Model, per JESD22-A115-A	ESD_{MM}	200	V
ESD Capability, Charged Device Model, Except Pin 6, per JESD22-C101F	ESD_{CDM}	750	V
ESD Capability, Charged Device Model, Pin 6, per JESD22-C101F	ESD_{CDM}	250	V

Stresses exceeding those listed in the Maximum Ratings table may damage the device. If any of these limits are exceeded, device functionality should not be assumed, damage may occur and reliability may be affected.
1. This device meets latch-up tests defined by JEDEC Standard JESD78D Class I.

RECOMMENDED OPERATING CONDITIONS

Parameter	Symbol	Min	Max	Unit
Maximum Operating Input Voltage	V_{CC}		35	V
Operating Junction Temperature	T_J	−40	125	°C

Functional operation above the stresses listed in the Recommended Operating Ranges is not implied. Extended exposure to stresses beyond the Recommended Operating Ranges limits may affect device reliability.

ELECTRICAL CHARACTERISTICS

−40°C ≤ T_J ≤ 125°C; V_{CC} = 12 V; C_{DRV} = 0 nF; R_{MIN_TON} = R_{MIN_TOFF} = 10 kΩ; V_{LLD} = 0 V; V_{CS} = −1 to +4 V; f_{CS} = 100 kHz, DC_{CS} = 50%, unless otherwise noted. Typical values are at T_J = +25°C

Parameter	Test Conditions	Symbol	Min	Typ	Max	Unit
SUPPLY SECTION						
VCC UVLO (ver. B & C)	V_{CC} rising	V_{CCON}	8.3	8.8	9.3	V
	V_{CC} falling	V_{CCOFF}	7.3	7.8	8.3	
VCC UVLO Hysteresis (ver. B & C)		V_{CCHYS}		1.0		V
VCC UVLO (ver. A, D & Q)	V_{CC} rising	V_{CCON}	4.20	4.45	4.80	V
	V_{CC} falling	V_{CCOFF}	3.70	3.95	4.20	
VCC UVLO Hysteresis (ver. A, D & Q)		V_{CCHYS}		0.5		V
Start-up Delay	V_{CC} rising from 0 to V_{CCON} + 1 V @ tr = 10 μs	t_{START_DEL}		75	125	μs

Share Feedback
Your Opinion Matters

Downloaded from Arrow.com.

ELECTRICAL CHARACTERISTICS

$-40°C \le T_J \le 125°C$; V_{CC} = 12 V; C_{DRV} = 0 nF; $R_{MIN_TON} = R_{MIN_TOFF}$ = 10 kΩ; V_{LLD} = 0 V; V_{CS} = −1 to +4 V; f_{CS} = 100 kHz, DC_{CS} = 50%, unless otherwise noted. Typical values are at T_J = +25°C

Parameter	Test Conditions		Symbol	Min	Typ	Max	Unit
SUPPLY SECTION							
Current Consumption, $R_{MIN_TON} = R_{MIN_TOFF}$ = 0 kΩ	C_{DRV} = 0 nF, f_{SW} = 500 kHz	A, C	I_{CC}	3.0	4.0	5.6	mA
		B, D, Q		3.5	4.5	6.0	
	C_{DRV} = 1 nF, f_{SW} = 500 kHz	A, C		4.5	6.0	7.5	
		B, D, Q		7.7	9.0	10.7	
	C_{DRV} = 10 nF, f_{SW} = 500 kHz	A, C		20	25	30	
		B, D, Q		40	50	60	
Current Consumption	No switching, V_{CS} = 0 V, $R_{MIN_TON} = R_{MIN_TOFF}$ = 0 kΩ		I_{CC}	1.0	2.0	2.5	mA
Current Consumption below UVLO	No switching, $V_{CC} = V_{CCOFF}$ − 0.1 V, V_{CS} = 0 V		I_{CC_UVLO}		75	125	μA
Current Consumption in Disable Mode	$V_{LLD} = V_{CC}$ − 0.1 V, V_{CS} = 0 V		I_{CC_DIS}	30	55	75	μA
DRIVER OUTPUT							
Output Voltage Rise-Time	C_{DRV} = 10 nF, 10% to 90% V_{DRVMAX}		t_r		40	55	ns
Output Voltage Fall-Time	C_{DRV} = 10 nF, 90% to 10% V_{DRVMAX}		t_f		20	35	ns
Driver Source Resistance			R_{DRV_SOURCE}		1.2		Ω
Driver Sink Resistance			R_{DRV_SINK}		0.5		Ω
Output Peak Source Current			I_{DRV_SOURCE}		4		A
Output Peak Sink Current			I_{DRV_SINK}		8		A
Maximum Driver Output Voltage	V_{CC} = 35 V, C_{DRV} > 1 nF, V_{LLD} = 0 V, (ver. B, D and Q)		V_{DRVMAX}	9.0	9.5	10.5	V
	V_{CC} = 35 V, C_{DRV} > 1 nF, V_{LLD} = 0 V, (ver. A, C)			4.3	4.7	5.5	
Minimum Driver Output Voltage	$V_{CC} = V_{CCOFF}$ + 200 mV, V_{LLD} = 0 V, (ver. B)		V_{DRVMIN}	7.2	7.8	8.5	V
	$V_{CC} = V_{CCOFF}$ + 200 mV, V_{LLD} = 0 V, (ver. C)			4.2	4.7	5.3	
	$V_{CC} = V_{CCOFF}$ + 200 mV, V_{LLD} = 0 V			3.6	4.0	4.4	
Minimum Driver Output Voltage	$V_{LLD} = V_{CC} - V_{LLDREC}$ V		$V_{DRVLLDMIN}$	0.0	0.4	1.2	V
CS INPUT							
Total Propagation Delay From CS to DRV Output On	V_{CS} goes down from 4 to −1 V, t_{f_CS} = 5 ns		t_{PD_ON}		35	60	ns
Total Propagation Delay From CS to DRV Output Off	V_{CS} goes up from −1 to 4 V, t_{r_CS} = 5 ns		t_{PD_OFF}		12	23	ns
CS Bias Current	V_{CS} = −20 mV		I_{CS}	−105	−100	−95	μA
Turn On CS Threshold Voltage			$V_{TH_CS_ON}$	−120	−75	−40	mV
Turn Off CS Threshold Voltage	Guaranteed by Design		$V_{TH_CS_OFF}$	−1		0	mV
Turn Off Timer Reset Threshold Voltage			$V_{TH_CS_RESET}$	0.4	0.5	0.6	V
CS Leakage Current	V_{CS} = 150 V		$I_{CS_LEAKAGE}$			0.4	μA
MINIMUM t_{ON} and t_{OFF} ADJUST							
Minimum t_{ON} time	R_{MIN_TON} = 0 Ω		t_{ON_MIN}	25	56	75	ns
Minimum t_{OFF} time	R_{MIN_TOFF} = 0 Ω		t_{OFF_MIN}	160	245	290	ns
Minimum t_{ON} time	R_{MIN_TON} = 10 kΩ		t_{ON_MIN}	0.92	1.00	1.08	μs
Minimum t_{OFF} time	R_{MIN_TOFF} = 10 kΩ		t_{OFF_MIN}	0.92	1.00	1.08	μs

Share Feedback
Your Opinion Matters

Downloaded from Arrow.com.

ELECTRICAL CHARACTERISTICS

$-40°C \le T_J \le 125°C$; V_{CC} = 12 V; C_{DRV} = 0 nF; $R_{MIN_TON} = R_{MIN_TOFF}$ = 10 kΩ; V_{LLD} = 0 V; V_{CS} = −1 to +4 V; f_{CS} = 100 kHz, DC_{CS} = 50%, unless otherwise noted. Typical values are at T_J = +25°C

Parameter	Test Conditions	Symbol	Min	Typ	Max	Unit
MINIMUM t_{ON} and t_{OFF} ADJUST						
Minimum t_{ON} time	R_{MIN_TON} = 50 kΩ	t_{ON_MIN}	4.62	5.00	5.38	μs
Minimum t_{OFF} time	R_{MIN_TOFF} = 50 kΩ	t_{OFF_MIN}	4.62	5.00	5.38	μs
MAXIMUM t_{ON} ADJUST						
Maximum t_{ON} Time	V_{MAX_TON} = 3 V	t_{ON_MAX}	4.3	4.8	5.3	μs
Maximum t_{ON} Time	V_{MAX_TON} = 0.3 V	t_{ON_MAX}	41	48	55	μs
Maximum t_{ON} Output Current	V_{MAX_TON} = 0.3 V, V_{CS} = 0 V	I_{MAX_TON}	−105	−100	−95	μA
LLD INPUT						
Disable Threshold	$V_{LLD_DIS} = V_{CC} - V_{LLD}$	V_{LLD_DIS}	0.8	0.9	1.0	V
Recovery Threshold	$V_{LLD_REC} = V_{CC} - V_{LLD}$	V_{LLD_REC}	0.9	1.0	1.1	V
Disable Hysteresis		V_{LLD_DISH}		0.1		V
Disable Time Hysteresis	Disable to Normal, Normal to Disable	t_{LLD_DISH}		45		μs
Disable Recovery Time		$t_{LLD_DIS_REC}$	6.0	12.5	16.0	μs
Low Pass Filter Frequency		f_{LPLLD}	6	10	13	kHz
Driver Voltage Clamp Threshold	$V_{DRV} = V_{DRVMAX}$, $V_{LLDMAX} = V_{CC} - V_{LLD}$	V_{LLDMAX}		2.0		V

Product parametric performance is indicated in the Electrical Characteristics for the listed test conditions, unless otherwise noted. Product performance may not be indicated by the Electrical Characteristics if operated under different conditions.

TYPICAL CHARACTERISTICS

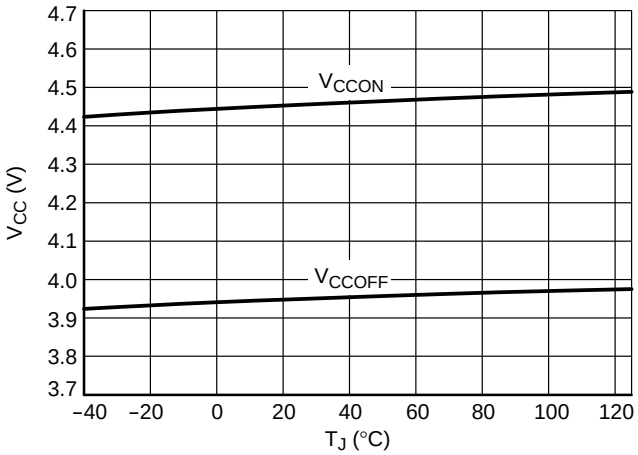

Figure 7. V_{CCON} and V_{CCOFF} Levels, ver. A, D, Q

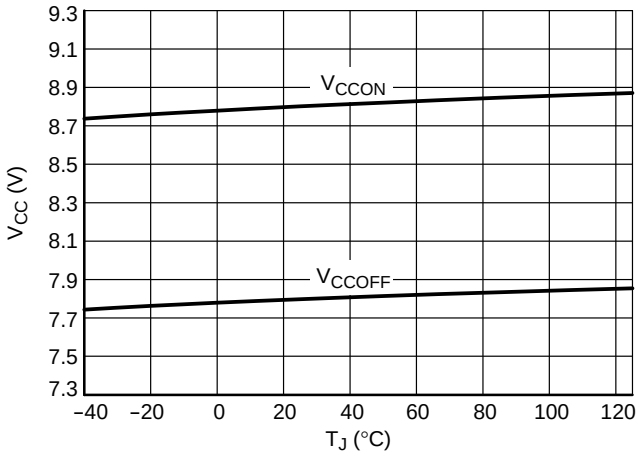

Figure 8. V_{CCON} and V_{CCOFF} Levels, ver. B, C

Share Feedback
Your Opinion Matters

Downloaded from Arrow.com.

TYPICAL CHARACTERISTICS

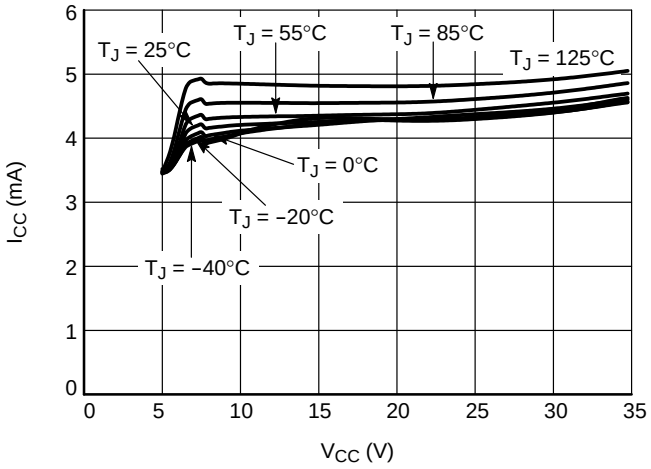

Figure 9. Current Consumption, C_{DRV} = 0 nF, f_{CS} = 500 kHz, ver. D

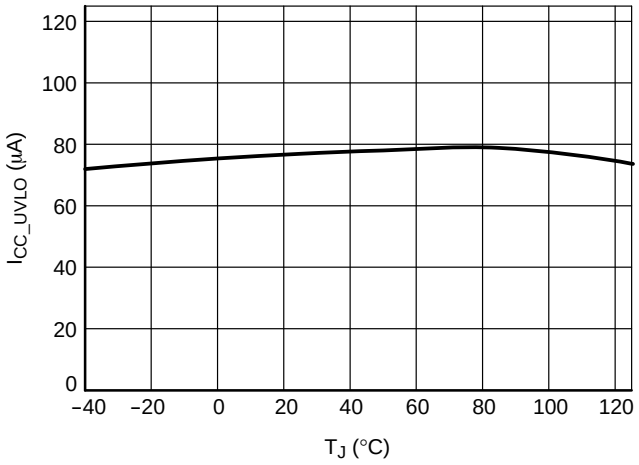

Figure 10. Current Consumption, V_{CC} = V_{CCOFF} − 0.1 V, V_{CS} = 0 V, ver. D

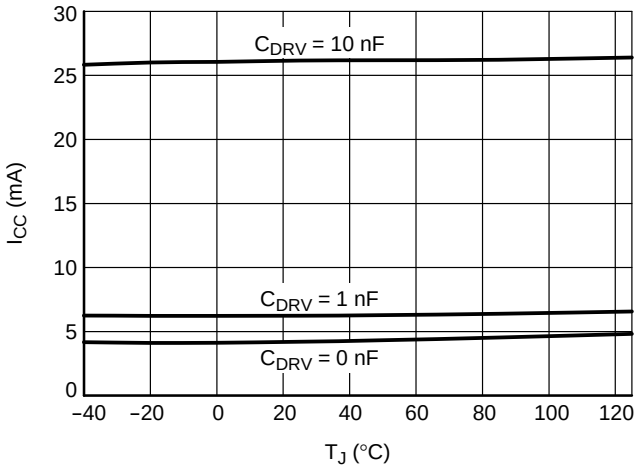

Figure 11. Current Consumption, V_{CC} = 12 V, V_{CS} = −1 to 4 V, f_{CS} = 500 kHz, ver. A

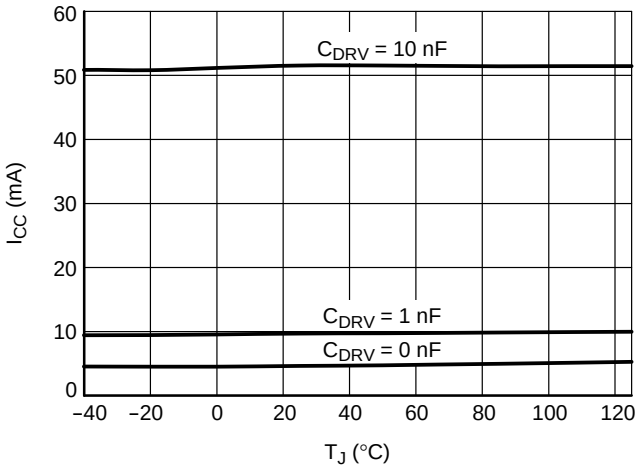

Figure 12. Current Consumption, V_{CC} = 12 V, V_{CS} = −1 to 4 V, f_{CS} = 500 kHz, ver. D

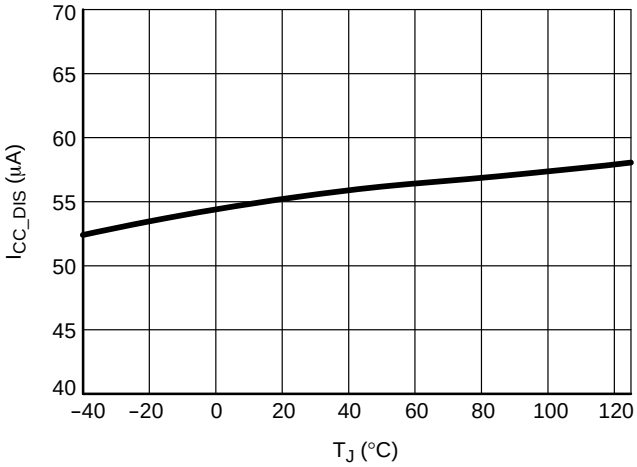

Figure 13. Current Consumption in Disable, V_{CC} = 12 V, V_{CS} = 0 V, V_{LLD} = V_{CC} − 0.1 V

Share Feedback
Your Opinion Matters

Downloaded from Arrow.com.

TYPICAL CHARACTERISTICS

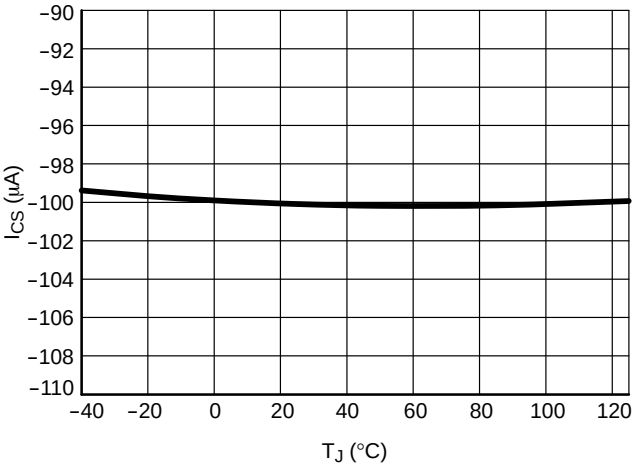

Figure 14. CS Current, V_{CS} = −20 mV

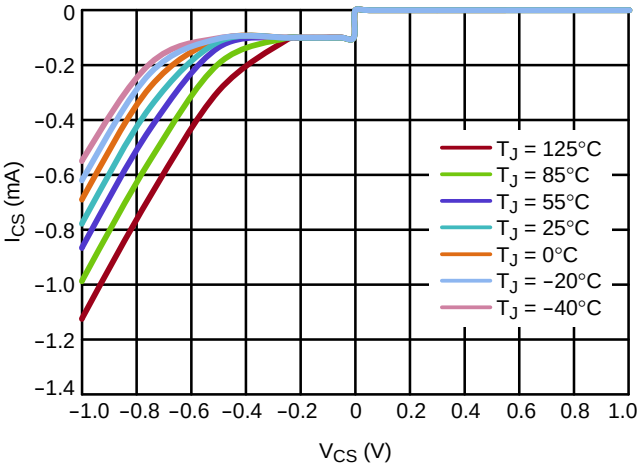

Figure 15. CS Current, V_{CC} = 12 V

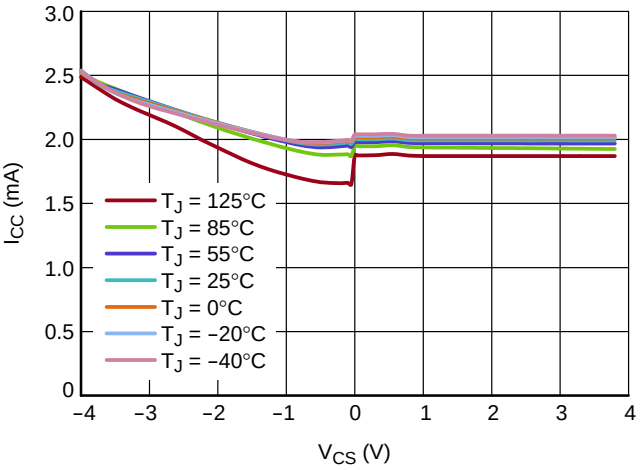

Figure 16. Supply Current vs. CS Voltage, V_{CC} = 12 V

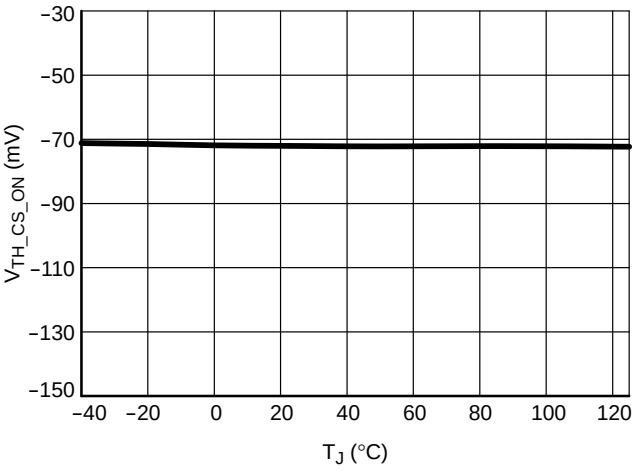

Figure 17. CS Turn-on Threshold

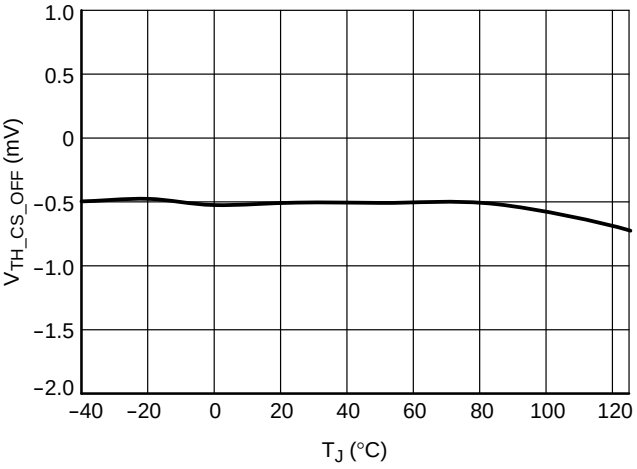

Figure 18. CS Turn-off Threshold

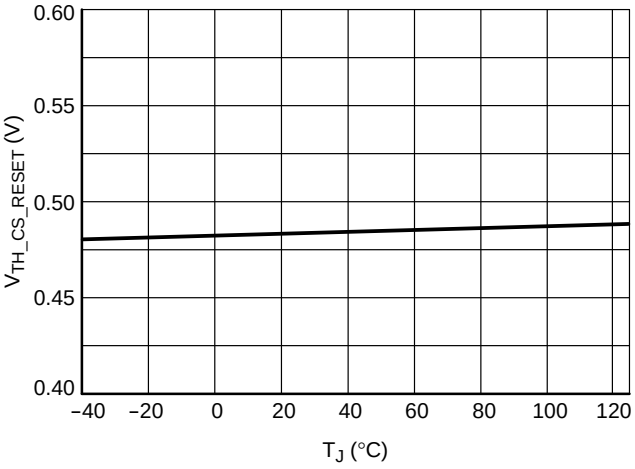

Figure 19. CS Reset Threshold

Share Feedback
Your Opinion Matters

Downloaded from Arrow.com.

TYPICAL CHARACTERISTICS

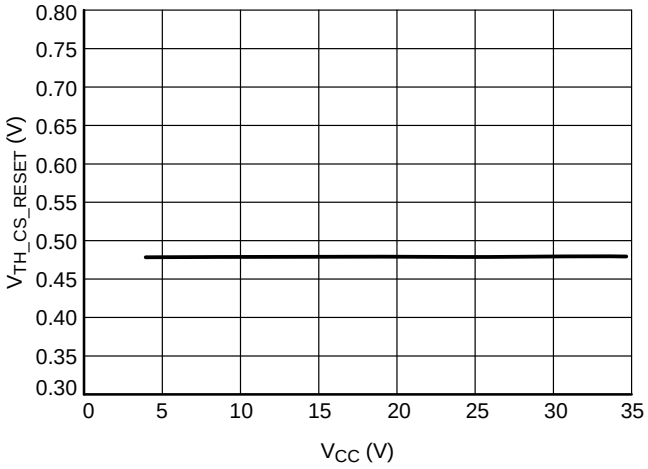

Figure 20. CS Reset Threshold

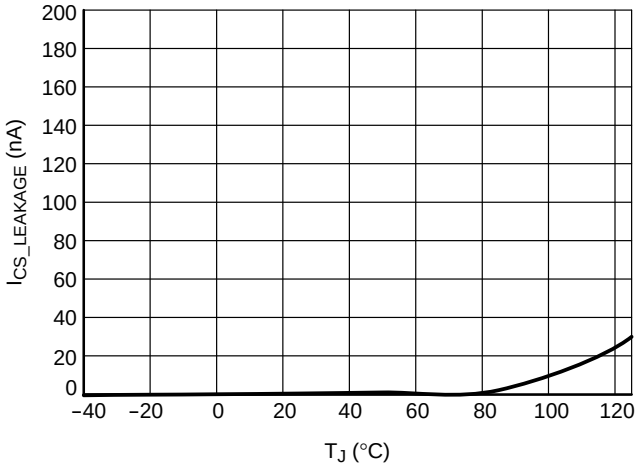

Figure 21. CS Leakage, V_{CS} = 150 V

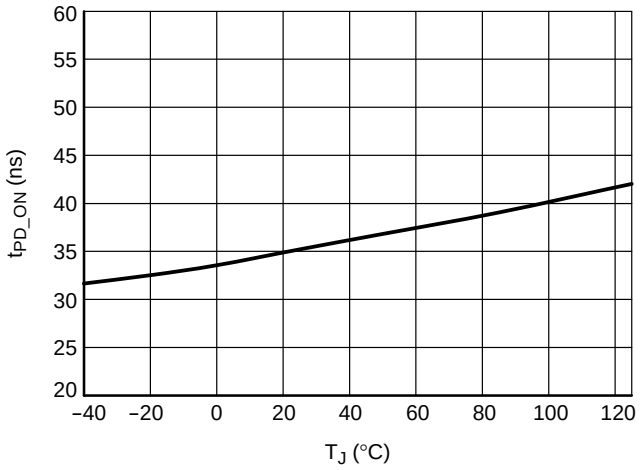

Figure 22. Propagation Delay from CS to DRV Output On

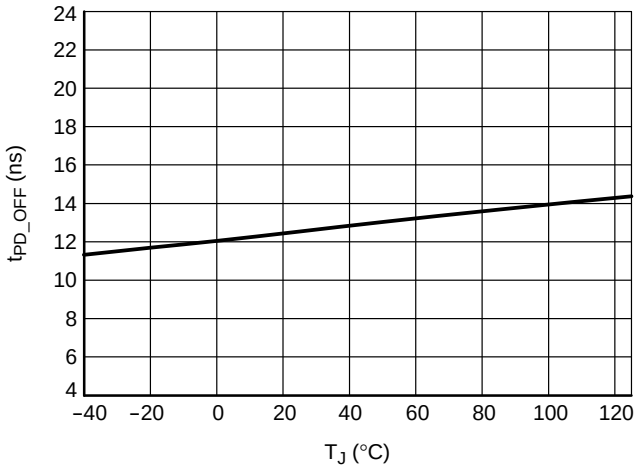

Figure 23. Propagation Delay from CS to DRV Output Off

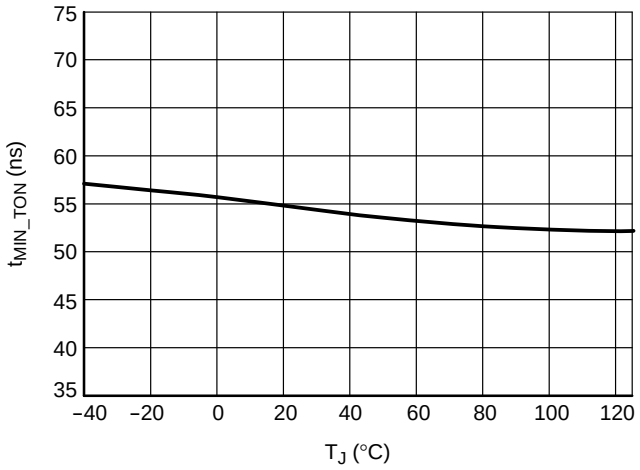

Figure 24. Minimum On-time R_{MIN_TON} = 0 Ω

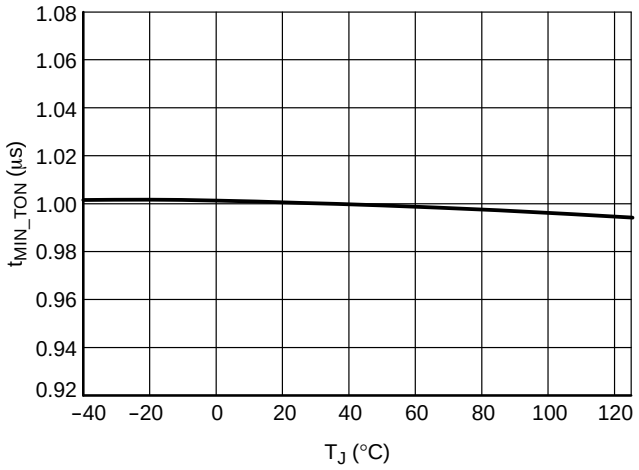

Figure 25. Minimum On-time R_{MIN_TON} = 10 kΩ

Share Feedback
Your Opinion Matters

Downloaded from Arrow.com.

TYPICAL CHARACTERISTICS

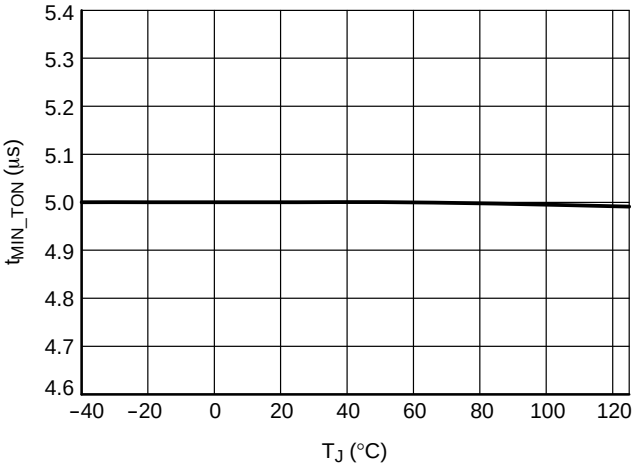

Figure 26. Minimum On-time R_{MIN_TON} = 50 kΩ

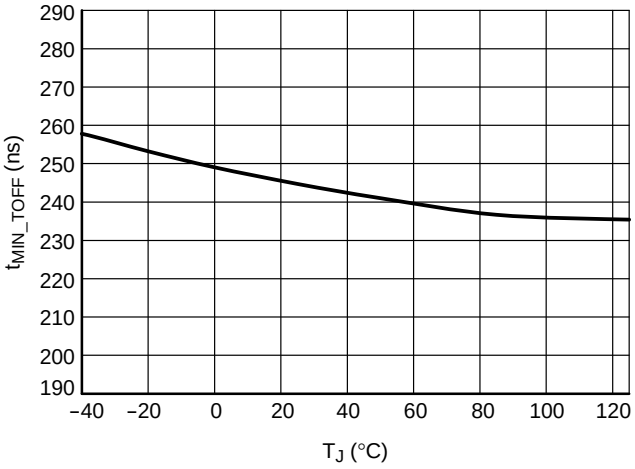

Figure 27. Minimum Off-time R_{MIN_TOFF} = 0 Ω

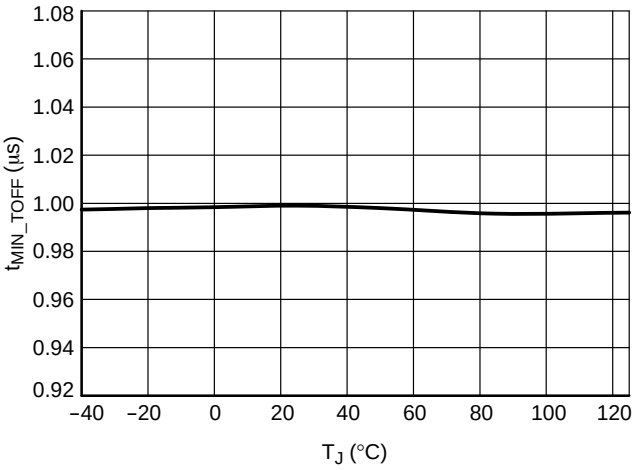

Figure 28. Minimum Off-time R_{MIN_TOFF} = 10 kΩ

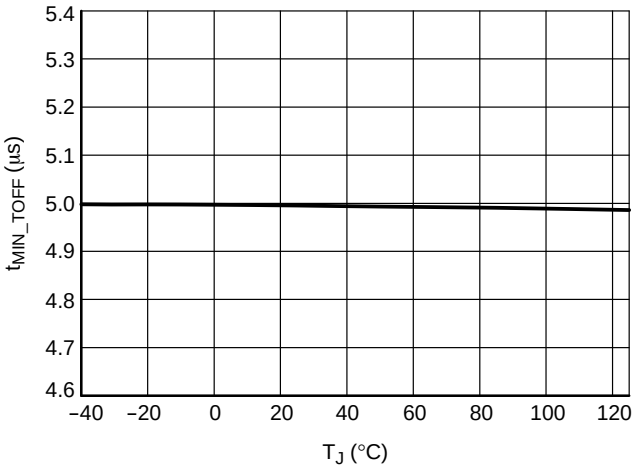

Figure 29. Minimum Off-time R_{MIN_TOFF} = 50 kΩ

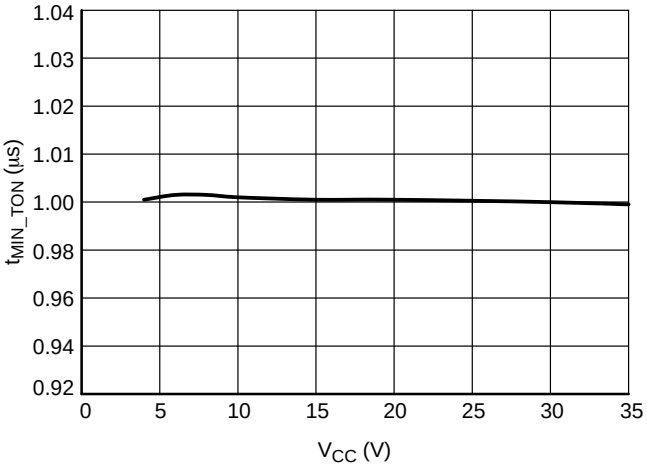

Figure 30. Minimum On-time R_{MIN_TON} = 10 kΩ

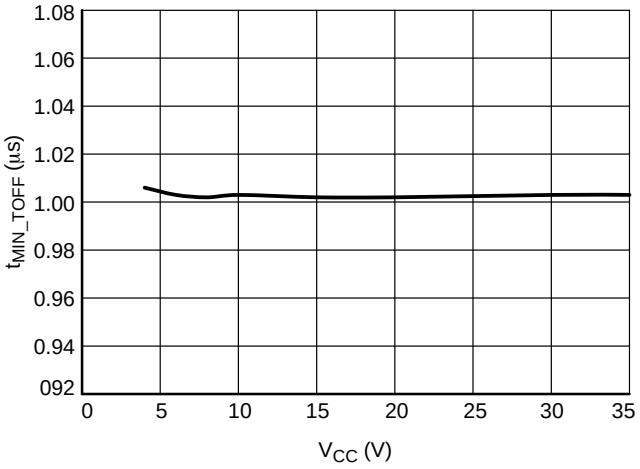

Figure 31. Minimum Off-time R_{MIN_TOFF} = 10 kΩ

Share Feedback
Your Opinion Matters

Downloaded from Arrow.com.

TYPICAL CHARACTERISTICS

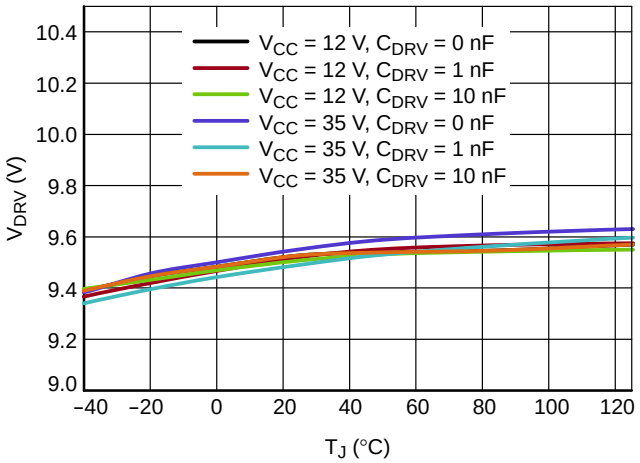

Figure 32. Driver and Output Voltage, ver. B, D and Q

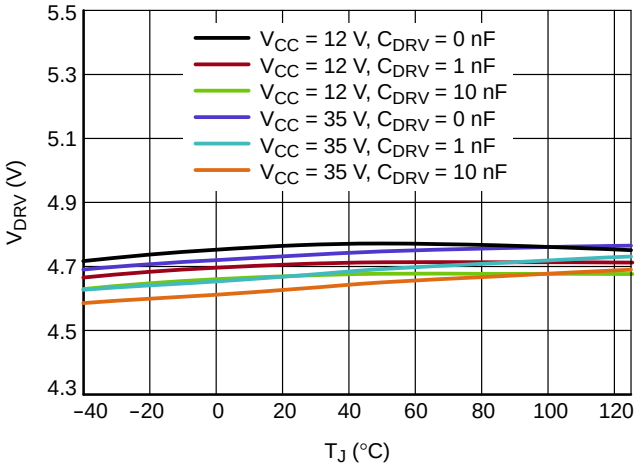

Figure 33. Driver Output Voltage, ver. A and C

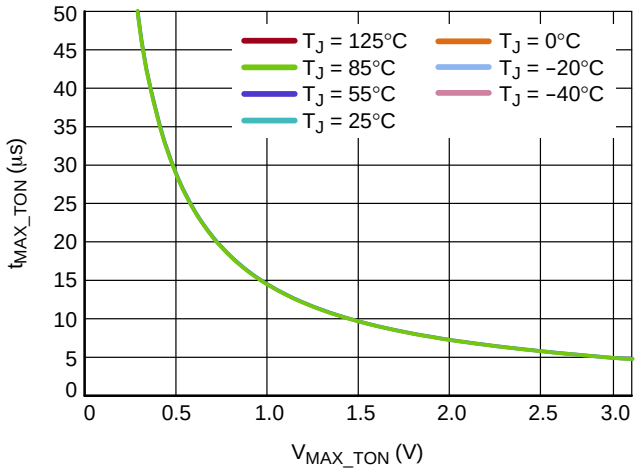

Figure 34. Maximum On-time, ver. Q

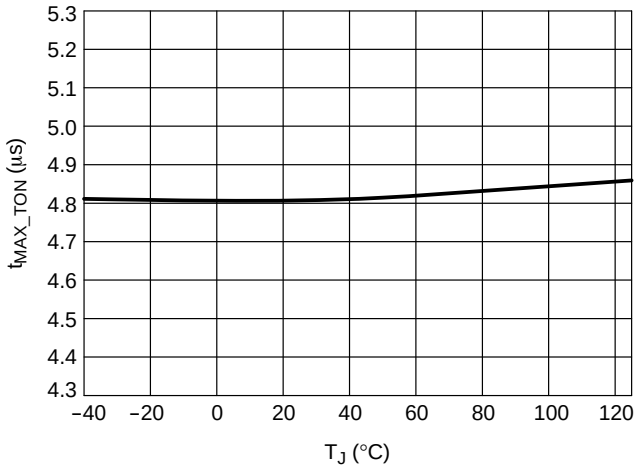

Figure 35. Maximum On-time, V_{MAX_TON} = 3 V, ver. Q

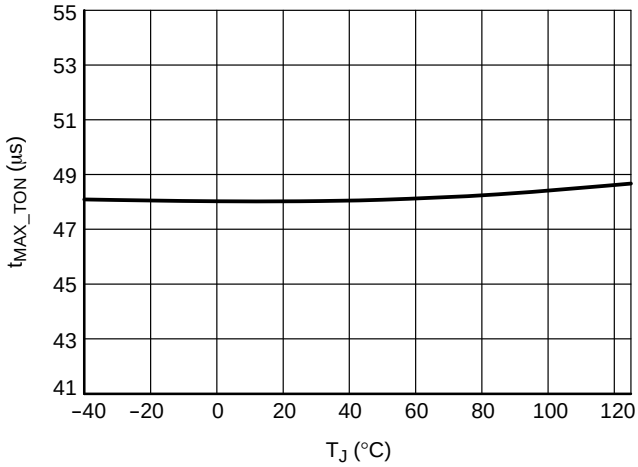

Figure 36. Maximum On-time, V_{MAX_TON} = 0.3 V, ver. Q

Share Feedback
Your Opinion Matters

Downloaded from Arrow.com.

APPLICATION INFORMATION

General description

The NCP43080 is designed to operate either as a standalone IC or as a companion IC to a primary side controller to help achieve efficient synchronous rectification in switch mode power supplies. This controller features a high current gate driver along with high-speed logic circuitry to provide appropriately timed drive signals to a synchronous rectification MOSFET. With its novel architecture, the NCP43080 has enough versatility to keep the synchronous rectification system efficient under any operating mode.

The NCP43080 works from an available voltage with range from 4 V (A, D & Q options) or 8 V (B & C options) to 35 V (typical). The wide V_{CC} range allows direct connection to the SMPS output voltage of most adapters such as notebooks, cell phone chargers and LCD TV adapters.

Precise turn-off threshold of the current sense comparator together with an accurate offset current source allows the user to adjust for any required turn-off current threshold of the SR MOSFET switch using a single resistor. Compared to other SR controllers that provide turn-off thresholds in the range of −10 mV to −5 mV, the NCP43080 offers a turn-off threshold of 0 mV. When using a low $R_{DS(on)}$ SR (1 mΩ) MOSFET our competition, with a −10 mV turn off, will turn off with 10 A still flowing through the SR FET, while our 0 mV turn off turns off the FET at 0 A; significantly reducing the turn-off current threshold and improving efficiency. Many of the competitor parts maintain a drain source voltage across the MOSFET causing the SR MOSFET to operate in the linear region to reduce turn-off time. Thanks to the 8 A sink current of the NCP43080 significantly reduces turn off time allowing for a minimal drain source voltage to be utilized and efficiency maximized.

To overcome false triggering issues after turn-on and turn-off events, the NCP43080 provides adjustable minimum on-time and off-time blanking periods. Blanking times can be adjusted independently of IC VCC using external resistors connected to GND. If needed, blanking periods can be modulated using additional components.

An extremely fast turn-off comparator, implemented on the current sense pin, allows for NCP43080 implementation in CCM applications without any additional components or external triggering.

An output driver features capability to keep SR transistor closed even when there is no supply voltage for NCP43080. SR transistor drain voltage goes up and down during SMPS operation and this is transferred through drain gate capacitance to gate and may turn on transistor. NCP43080 uses this pulsing voltage at SR transistor gate (DRV pin) and uses it internally to provide enough supply to activate internal driver sink transistor. DRV voltage is pulled low (not to zero) thanks to this feature and eliminate the risk of turned on SR transistor before enough V_{CC} is applied to NCP43080.

Some IC versions include a MAX_TON circuit that helps a quasi resonant (QR) controller to work in CCM mode when a heavy load is present like in the example of a printer's motor starting up.

Finally, the NCP43080 features a special pin (LLD) that can be used to reduce gate driver voltage clamp according to application load conditions. This feature helps to reduce issues with transition from disabled driver to full driver output voltage and back. Disable state can be also activated through this pin to decrease power consumption in no load conditions. If the LLD feature is not wanted then the LLD pin can be tied to GND.

Current Sense Input

Figure 37 shows the internal connection of the CS circuitry on the current sense input. When the voltage on the secondary winding of the SMPS reverses, the body diode of M1 starts to conduct current and the voltage of M1's drain drops approximately to −1 V. The CS pin sources current of 100 μA that creates a voltage drop on the R_{SHIFT_CS} resistor (resistor is optional, we recommend shorting this resistor). Once the voltage on the CS pin is lower than $V_{TH_CS_ON}$ threshold, M1 is turned-on. Because of parasitic impedances, significant ringing can occur in the application. To overcome false sudden turn-off due to mentioned ringing, the minimum conduction time of the SR MOSFET is activated. Minimum conduction time can be adjusted using the R_{MIN_TON} resistor.

Share Feedback
Your Opinion Matters

Downloaded from Arrow.com.

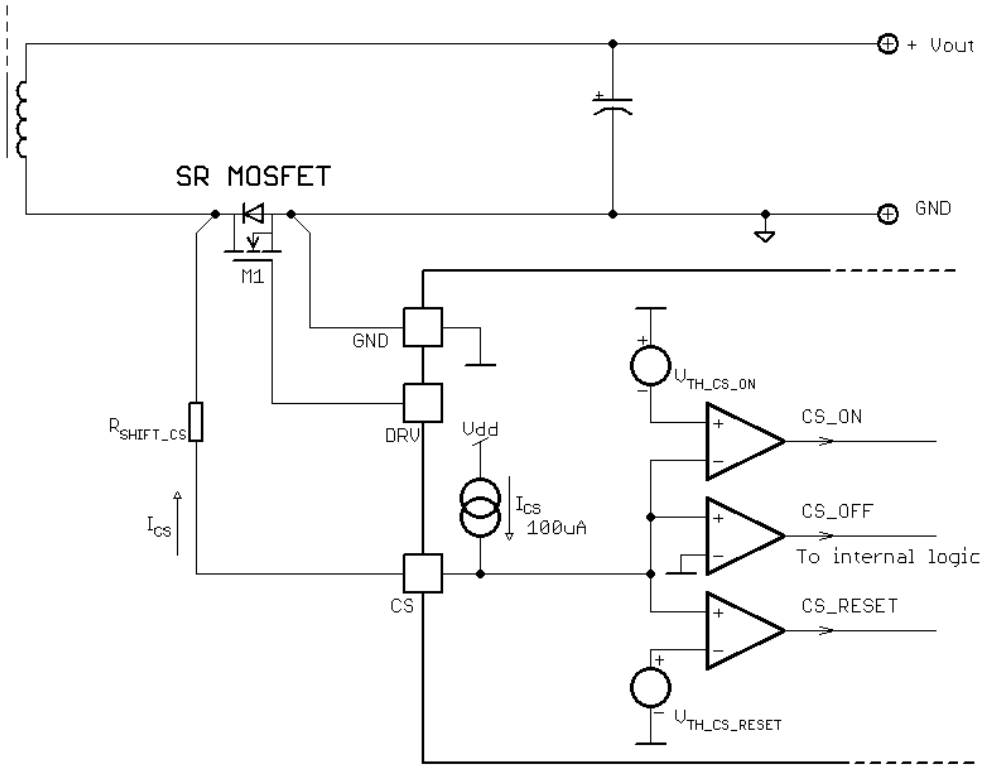

Figure 37. Current Sensing Circuitry Functionality

The SR MOSFET is turned-off as soon as the voltage on the CS pin is higher than $V_{TH_CS_OFF}$ (typically −0.5 mV minus any voltage dropped on the optional R_{SHIFT_CS}). For the same ringing reason, a minimum off-time timer is asserted once the V_{CS} goes above $V_{TH_CS_RESET}$. The minimum off-time can be externally adjusted using R_{MIN_TOFF} resistor. The minimum off-time generator can be re-triggered by MIN_TOFF reset comparator if some spurious ringing occurs on the CS input after SR MOSFET turn-off event. This feature significantly simplifies SR system implementation in flyback converters.

In an LLC converter the SR MOSFET M1 channel conducts while secondary side current is decreasing (refer to Figure 38). Therefore the turn-off current depends on MOSFET R_{DSON}. The −0.5 mV threshold provides an optimum switching period usage while keeping enough time margin for the gate turn-off. The R_{SHIFT_CS} resistor provides the designer with the possibility to modify (increase) the actual turn-on and turn-off secondary current thresholds. To ensure proper switching, the min_t_{OFF} timer is reset, when the V_{DS} of the MOSFET rings and falls down past the $V_{TH_CS_RESET}$. The minimum off-time needs to expire before another drive pulse can be initiated. Minimum off-time timer is started again when V_{DS} rises above $V_{TH_CS_RESET}$.

Share Feedback
Your Opinion Matters

Downloaded from Arrow.com.

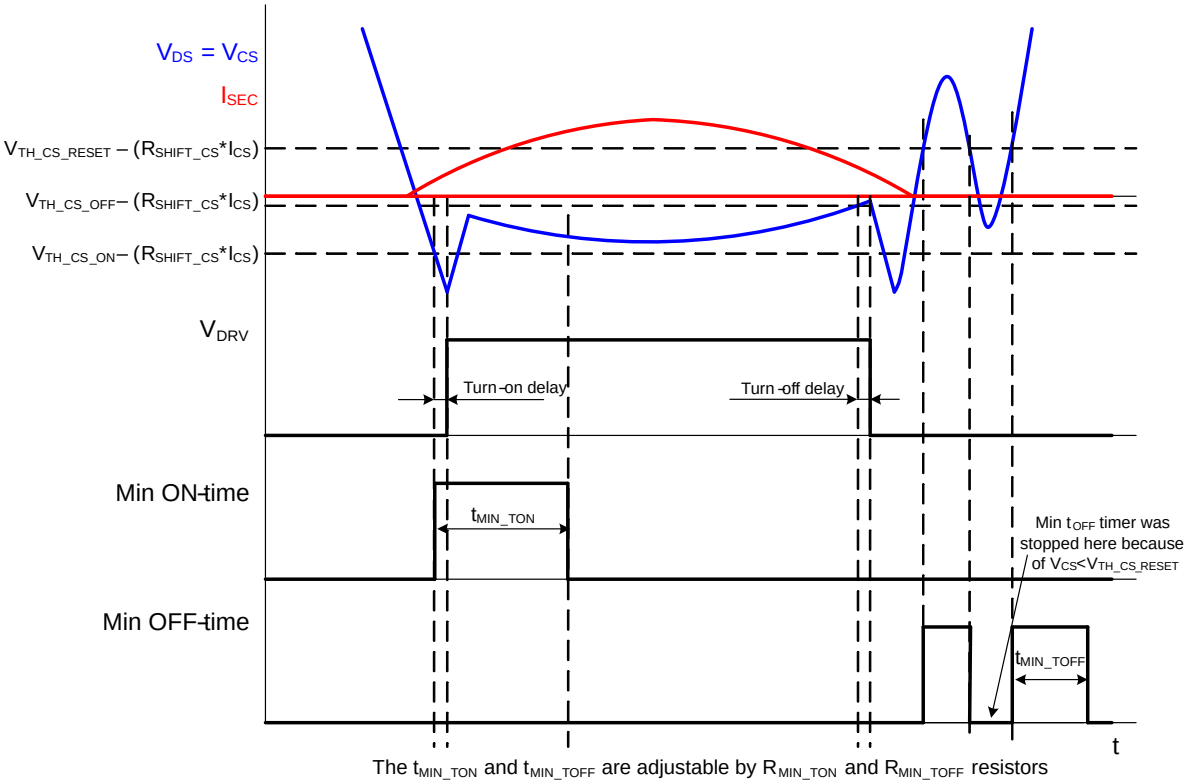

Figure 38. CS Input Comparators Thresholds and Blanking Periods Timing in LLC

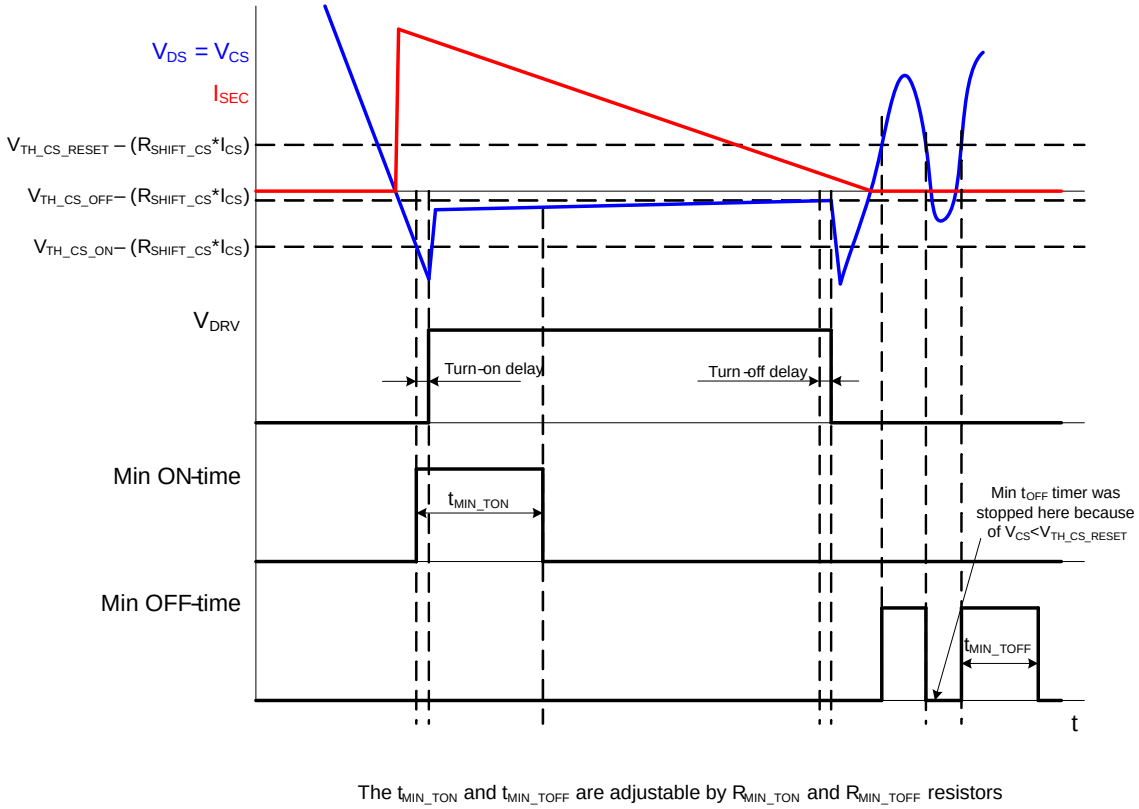

Figure 39. CS Input Comparators Thresholds and Blanking Periods Timing in Flyback

Share Feedback
Your Opinion Matters

Downloaded from Arrow.com.

If no R_{SHIFT_CS} resistor is used, the turn-on, turn-off and $V_{TH_CS_RESET}$ thresholds are fully given by the CS input specification (please refer to electrical characteristics table). The CS pin offset current causes a voltage drop that is equal to:

$$V_{RSHIFT_CS} = R_{SHIFT_CS} * I_{CS} \quad \text{(eq. 1)}$$

Final turn-on and turn-off thresholds can be then calculated as:

$$V_{CS_TURN_ON} = V_{TH_CS_ON} - \left(R_{SHIFT_CS} * I_{CS}\right) \quad \text{(eq. 2)}$$

$$V_{CS_TURN_OFF} = V_{TH_CS_OFF} - \left(R_{SHIFT_CS} * I_{CS}\right) \quad \text{(eq. 3)}$$

$$V_{CS_RESET} = V_{TH_CS_RESET} - \left(R_{SHIFT_CS} * I_{CS}\right) \quad \text{(eq. 4)}$$

Note that R_{SHIFT_CS} impact on turn-on and $V_{TH_CS_RESET}$ thresholds is less critical than its effect on the turn-off threshold.

It should be noted that when using a SR MOSFET in a through hole package the parasitic inductance of the MOSFET package leads (refer to Figure 40) causes a turn-off current threshold increase. The current that flows through the SR MOSFET experiences a high $\Delta i(t)/\Delta t$ that induces an error voltage on the SR MOSFET leads due to their parasitic inductance. This error voltage is proportional to the derivative of the SR MOSFET current; and shifts the CS input voltage to zero when significant current still flows through the MOSFET channel. As a result, the SR MOSFET is turned-off prematurely and the efficiency of the SMPS is not optimized – refer to Figure 41 for a better understanding.

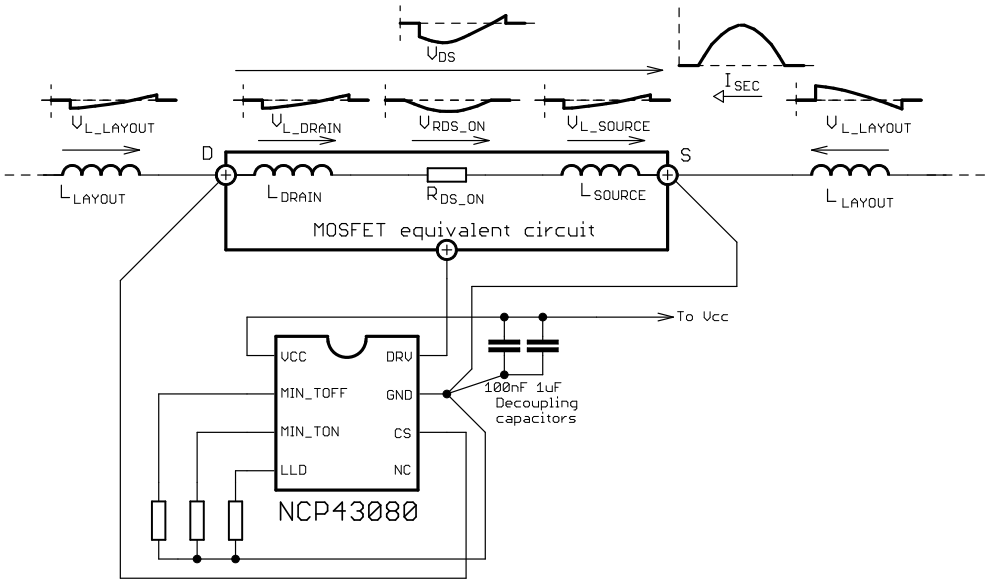

Figure 40. SR System Connection Including MOSFET and Layout Parasitic Inductances in LLC Application

Share Feedback
Your Opinion Matters

Downloaded from Arrow.com.

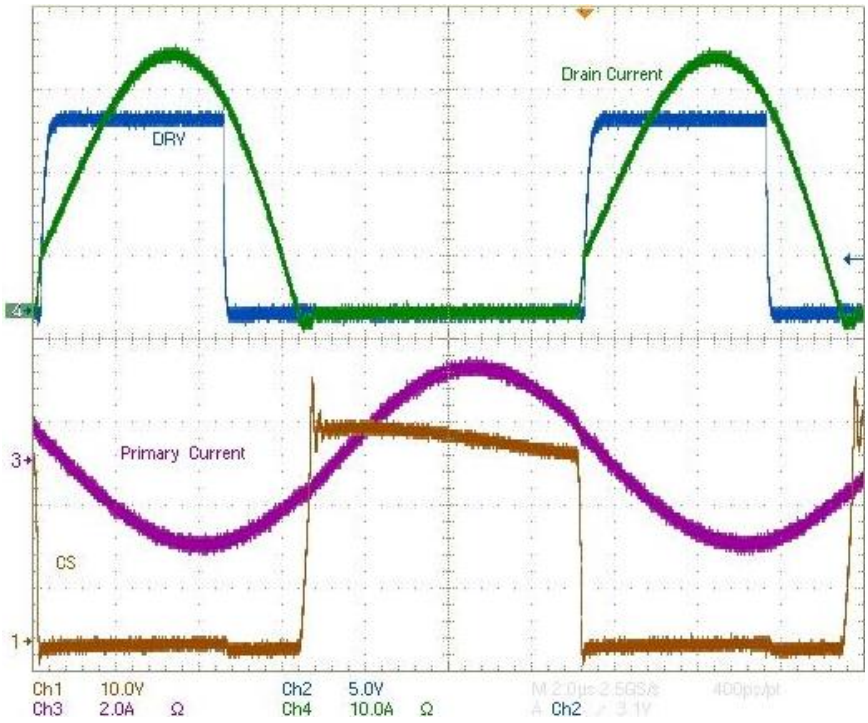

Figure 41. Waveforms From SR System Implemented in LLC Application and Using MOSFET in TO220 Package With Long Leads – SR MOSFET channel Conduction Time is Reduced

Note that the efficiency impact caused by the error voltage due to the parasitic inductance increases with lower MOSFETs $R_{DS(on)}$ and/or higher operating frequency.

It is thus beneficial to minimize SR MOSFET package leads length in order to maximize application efficiency. The optimum solution for applications with high secondary current $\Delta i/\Delta t$ and high operating frequency is to use lead-less SR MOSFET i.e. SR MOSFET in SMT package. The parasitic inductance of a SMT package is negligible causing insignificant CS turn-off threshold shift and thus minimum impact to efficiency (refer to Figure 42).

Share Feedback
Your Opinion Matters

Downloaded from Arrow.com.

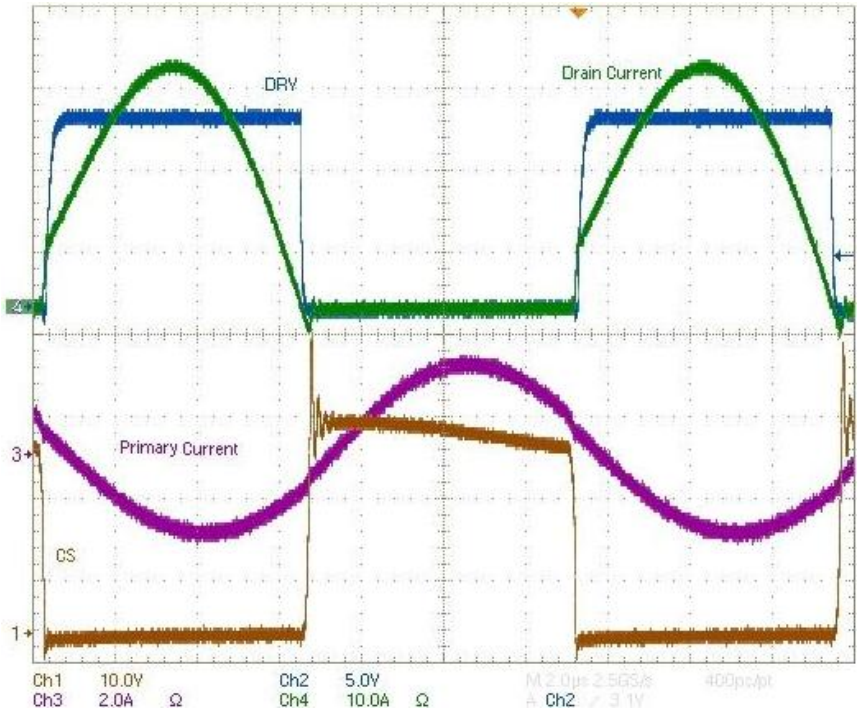

Figure 42. Waveforms from SR System Implemented in LLC Application and Using MOSFET in SMT Package with Minimized Parasitic Inductance – SR MOSFET Channel Conduction Time is Optimized

It can be deduced from the above paragraphs on the induced error voltage and parameter tables that turn-off threshold precision is quite critical. If we consider a SR MOSFET with $R_{DS(on)}$ of 1 mΩ, the 1 mV error voltage on the CS pin results in a 1 A turn-off current threshold difference; thus the PCB layout is very critical when implementing the SR system. Note that the CS turn-off comparator is referred to the GND pin. Any parasitic impedance (resistive or inductive – even on the magnitude of mΩ and nH values) can cause a high error voltage that is then evaluated by the CS comparator. Ideally the CS turn-off comparator should detect voltage that is caused by secondary current directly on the SR MOSFET channel resistance. In reality there will be small parasitic impedance on the CS path due to the bonding wires, leads and soldering. To assure the best efficiency results, a Kelvin connection of the SR controller to the power circuitry should be implemented. The GND pin should be connected to the SR MOSFET source soldering point and current sense pin should be connected to the SR MOSFET drain soldering point – refer to Figure 40. Using a Kelvin connection will avoid any impact of PCB layout parasitic elements on the SR controller functionality; SR MOSFET parasitic elements will still play a role in attaining an error voltage. Figure 44 and Figure 43 show examples of SR system layouts using MOSFETs in TO220 and SMT packages. It is evident that the MOSFET leads should be as short as possible to minimize parasitic inductances when using packages with leads (like TO220). Figure 43 shows how to layout design with two SR MOSFETs in parallel. It has to be noted that it is not easy task and designer has to paid lot of attention to do symmetric Kelvin connection.

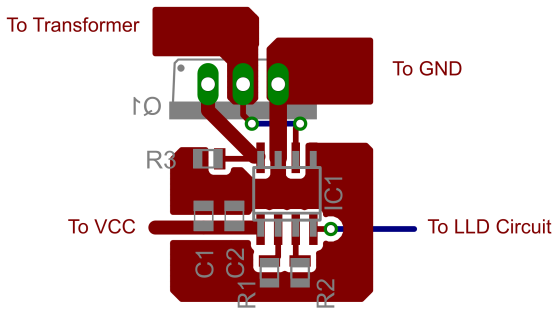

Figure 44. Recommended Layout When Using SR MOSFET in TO220 Package

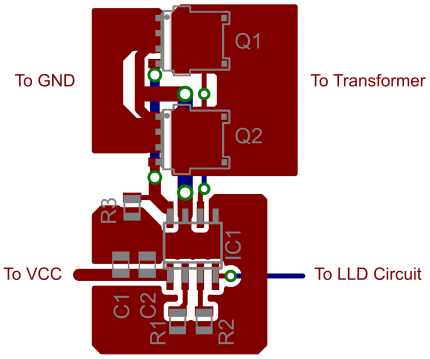

Figure 43. Recommended Layout When Using SR MOSFET in SMT Package (2x SO8 FL)

Share Feedback
Your Opinion Matters

Downloaded from Arrow.com.

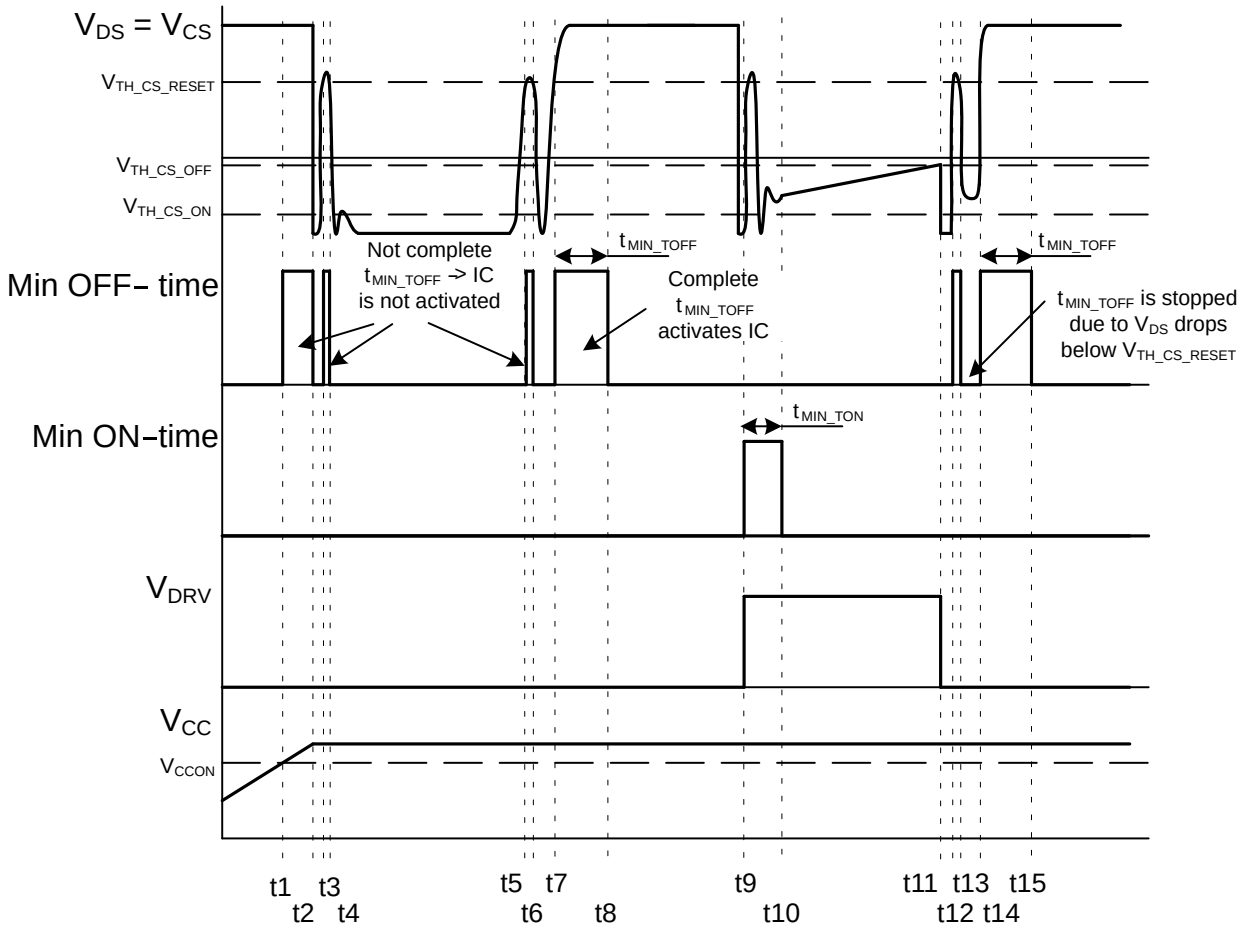

Figure 45. NCP43080 Operation after Start-Up Event

Self Synchronization

Self synchronization feature during start-up can be seen at Figure 45. Figure 45 shows how the minimum off-time timer is reset when CS voltage is oscillating through $V_{TH_CS_RESET}$ level. The NCP43080 starts operation at time t1 (time t1 can be seen as a wake-up event from the disable mode through LLD pin). Internal logic waits for one complete minimum off-time period to expire before the NCP43080 can activate the driver after a start-up or wake-up event. The minimum off-time timer starts to run at time t1, because V_{CS} is higher than $V_{TH_CS_RESET}$. The timer is then reset, before its set minimum off-time period expires, at time t2 thanks to CS voltage lower than $V_{TH_CS_RESET}$ threshold. The aforementioned reset situation can be seen again at time t3, t4, t5 and t6. A complete minimum off-time period elapses between times t7 and t8 allowing the IC to activate a driver output after time t8.

Minimum t_{ON} and t_{OFF} Adjustment

The NCP43080 offers an adjustable minimum on-time and off-time blanking periods that ease the implementation of a synchronous rectification system in any SMPS topology. These timers avoid false triggering on the CS input after the MOSFET is turned on or off.

The adjustment of minimum t_{ON} and t_{OFF} periods are done based on an internal timing capacitance and external resistors connected to the GND pin – refer to Figure 46 for a better understanding.

Share Feedback
Your Opinion Matters

Downloaded from Arrow.com.

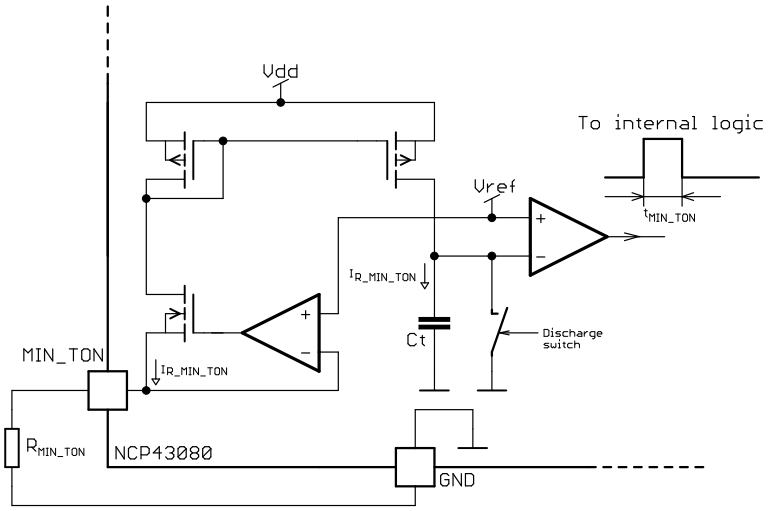

Figure 46. Internal Connection of the MIN_TON Generator (the MIN_TOFF Works in the Same Way)

Current through the MIN_TON adjust resistor can be calculated as:

$$I_{R_MIN_TON} = \frac{V_{ref}}{R_{Ton_min}} \quad \text{(eq. 5)}$$

If the internal current mirror creates the same current through R_{MIN_TON} as used the internal timing capacitor (Ct) charging, then the minimum on-time duration can be calculated using this equation.

$$t_{MIN_TON} = C_t \frac{V_{ref}}{I_{R_MIN_TON}} = C_t \frac{V_{ref}}{\frac{V_{ref}}{R_{MIN_TON}}} = C_t \cdot R_{MIN_TON} \quad \text{(eq. 6)}$$

The internal capacitor size would be too large if $I_{R_MIN_TON}$ was used. The internal current mirror uses a proportional current, given by the internal current mirror ratio. One can then calculate the MIN_TON and MIN_TOFF blanking periods using below equations:

$$t_{MIN_TON} = 1.00 * 10^{-4} * R_{MIN_TON}\ [\mu s] \quad \text{(eq. 7)}$$

$$t_{MIN_TOFF} = 1.00 * 10^{-4} * R_{MIN_TOFF}\ [\mu s] \quad \text{(eq. 8)}$$

Note that the internal timing comparator delay affects the accuracy of Equations 7 and 8 when MIN_TON/ MIN_TOFF times are selected near to their minimum possible values. Please refer to Figures 47 and 48 for measured minimum on and off time charts.

Share Feedback
Your Opinion Matters

Downloaded from Arrow.com.

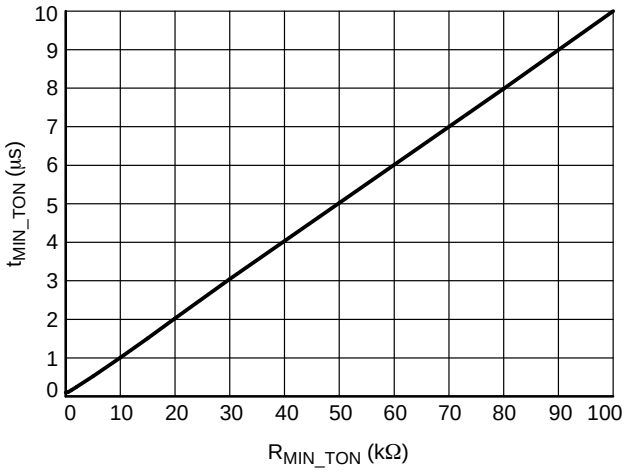

Figure 47. MIN_TON Adjust Characteristics

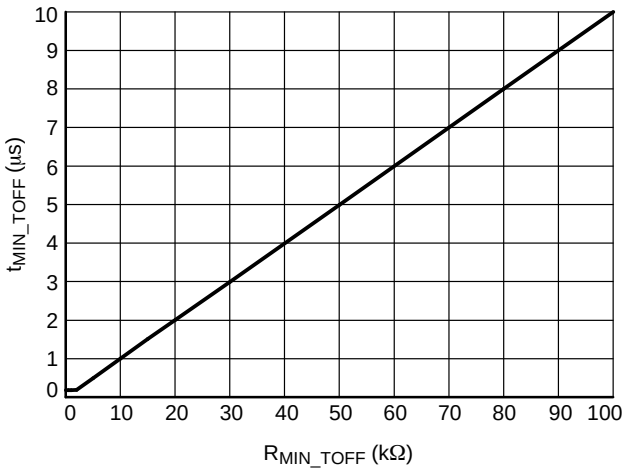

Figure 48. MIN_TOFF Adjust Characteristics

The absolute minimum t_{ON} duration is internally clamped to 55 ns and minimum t_{OFF} duration to 245 ns in order to prevent any potential issues with the MIN_TON and/or MIN_TOFF pins being shorted to GND.

The NCP43080 features dedicated anti-ringing protection system that is implemented with a MIN_TOFF blank generator. The minimum off-time one-shot generator is restarted in the case when the CS pin voltage crosses $V_{TH_CS_RESET}$ threshold and MIN_TOFF period is active. The total off-time blanking period is prolonged due to the ringing in the application (refer to Figure 38).

Some applications may require adaptive minimum on and off time blanking periods. With NCP43080 it is possible to modulate blanking periods by using an external NPN transistor – refer to Figure 49. The modulation signal can be derived based on the load current, feedback regulator voltage or other application parameter.

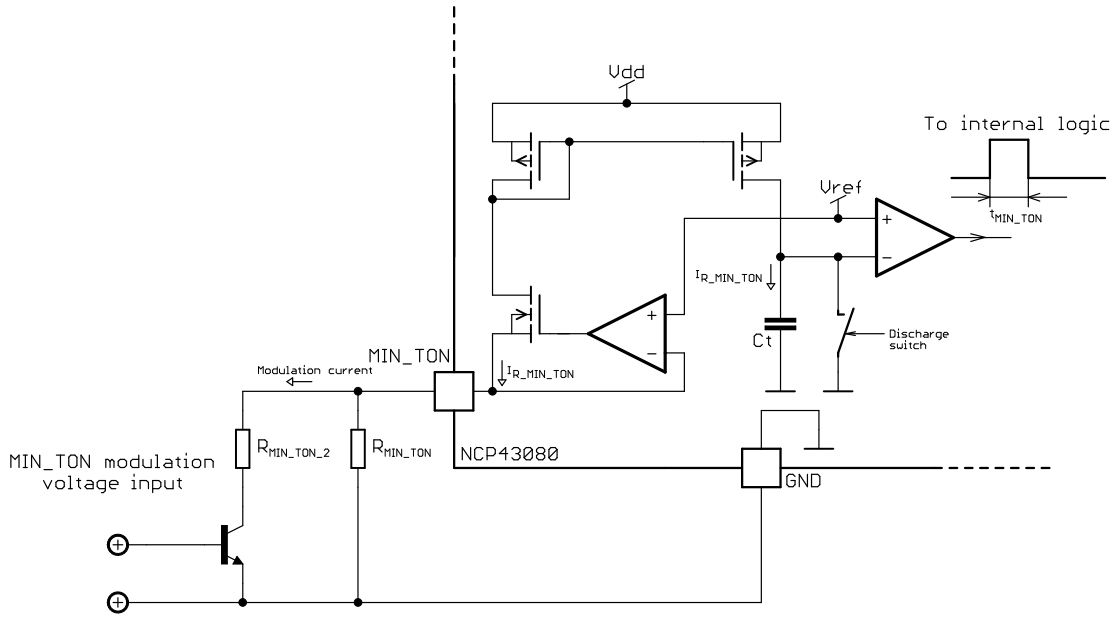

Figure 49. Possible Connection for MIN_T_{ON} and MIN_T_{OFF} Modulation

Share Feedback
Your Opinion Matters

Downloaded from Arrow.com.

Maximum t_{ON} adjustment

The NCP43080Q offers an adjustable maximum on-time (like the min_t_{ON} and min_t_{OFF} settings shown above) that can be very useful for QR controllers at high loads. Under high load conditions the QR controller can operate in CCM thanks to this feature. The NCP43080Q version has the ability to turn-off the DRV signal to the SR MOSFET before the secondary side current reaches zero. The DRV signal from the NCP43080Q can be fed to the primary side through a pulse transformer (see Figure 4 for detail) to a transistor on the primary side to emulate a ZCD event before an actual ZCD event occurs. This feature helps to keep the minimum switching frequency up so that there is better energy transfer through the transformer (a smaller transformer core can be used). Also another advantage is that the IC controls the SR MOSFET and turns off from secondary side before the primary side is turned on in CCM to ensure no cross conduction. By controlling the SR MOSFET's turn off before the primary side turn off, producing a zero cross conduction operation, this will improve efficiency.

The Internal connection of the MAX_TON feature is shown in Figure 50. Figure 50 shows a method that allows for a modification of the maximum on-time according to output voltage. At a lower V_{OUT}, caused by hard overload or at startup, the maximum on-time should be longer than at nominal voltage. Resistor R_A can be used to modulate maximum on-time according to V_{OUT} or any other parameter.

The operational waveforms at heavy load in QR type SMPS are shown in Figure 51. After t_{MAX_TON} time is exceeded, the synchronous switch is turned off and the secondary current is conducted by the diode. Information about turned off SR MOSFET is transferred by the DRV pin through a small pulse transformer to the primary side where it acts on the ZCD detection circuit to allow the primary switch to be turned on. Secondary side current disappears before the primary switch is turned on without a possibility of cross current condition.

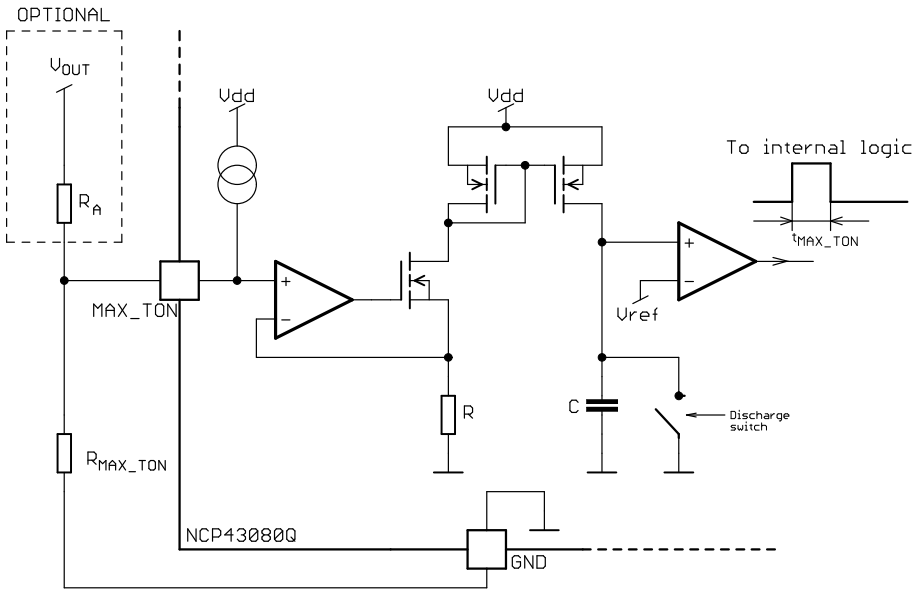

Figure 50. Internal Connection of the MAX_TON Generator, NCP43080Q

Share Feedback
Your Opinion Matters

Downloaded from Arrow.com.

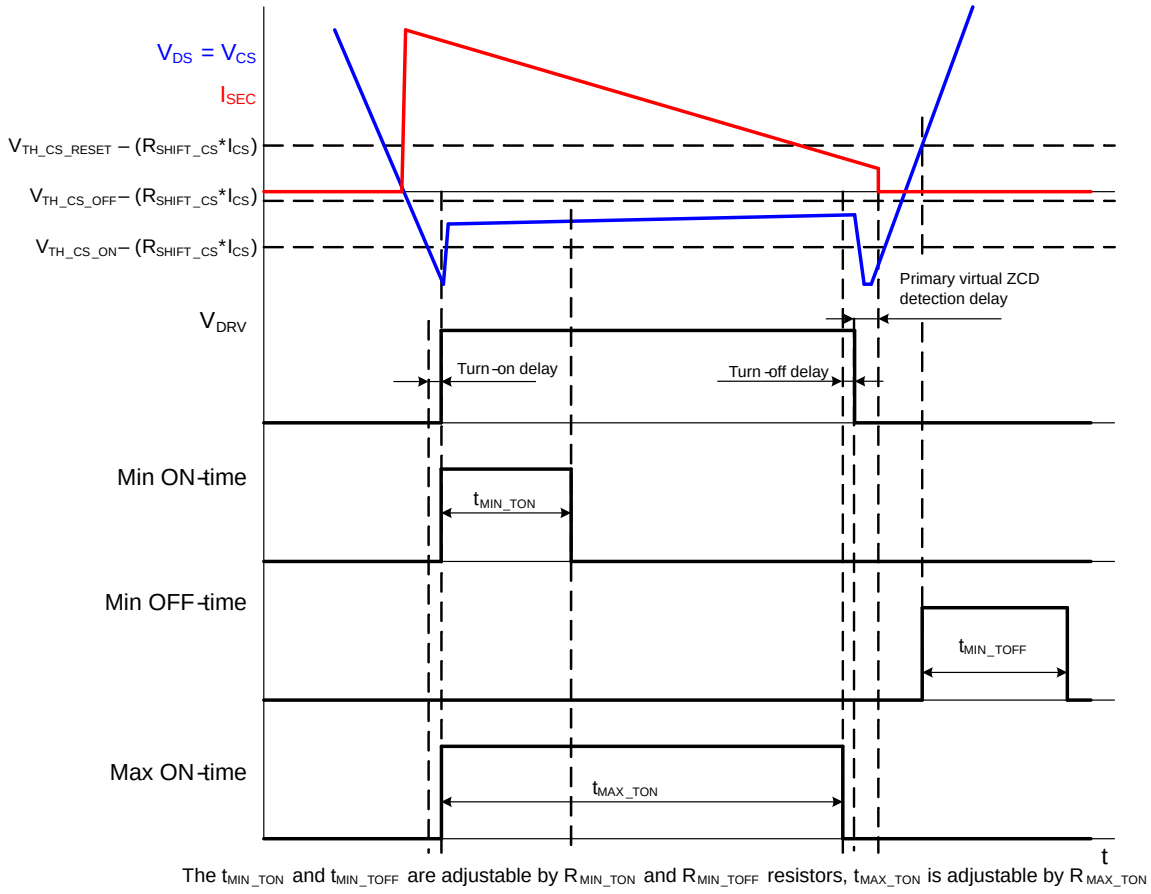

Figure 51. Function of MAX_TON Generator in Heavy Load Condition

Adaptive Gate Driver Clamp and automatic Light Load Turn-off

As synchronous rectification system significantly improves efficiency in most of SMPS applications during medium or full load conditions. However, as the load reduces into light or no-load conditions the SR MOSFET driving losses and SR controller consumption become more critical. The NCP43080 offers two key features that help to optimize application efficiency under light load and no load conditions:

1st – The driver clamp voltage is modulated and follows the output load condition. When the output load decreases the driver clamp voltage decreases as well. Under heavy load conditions the SR MOSFET's gate needs to be driven very hard to optimize the performance and reduce conduction losses. During light load conditions it is not as critical to drive the SR MOSFET's channel into such a low R_{DSON} state. This adaptive gate clamp technique helps to optimize efficiency during light load conditions especially in LLC applications where the SR MOSFETs with high input capacitance are used.

Driver voltage modulation improves the system behavior when SR controller state is changed in and out of normal or disable modes. Soft transient between drop at body diode and drop at MOSFET's $R_{DS(on)}$ only improves stability during load transients.

2nd – In extremely low load conditions or no load conditions the NCP43080 fully disables driver output and reduces the internal power consumption when output load drops below the level where skip-mode takes place.

Both features are controlled by voltage at LLD pin. The LLD pin voltage characteristic is shown in Figure 52. Driver voltage clamp is a linear function of the voltage difference between the VCC and LLD pins from V_{LLD_REC} point up to V_{LLD_MAX}. A disable mode is available, where the IC current consumption is dramatically reduced, when the difference of V_{CC} – V_{LLD} voltage drops below V_{LLD_DIS}. When the voltage difference between the V_{CC} – V_{LLD} pins increase above V_{LLC_REC} the disable mode ends and the IC regains normal operation. It should be noted that there are also some time delays to enter and exit from the disable mode. Time waveforms are shown at Figure 53. There is a time, t_{LLD_DISH}, that the logic ignores changes from disable mode to normal or reversely. There is also some time $t_{LLD_DIS_R}$ that is needed after an exit from the disable mode to assure proper internal block biasing before SR controller starts work normally.

Share Feedback
Your Opinion Matters

Downloaded from Arrow.com.

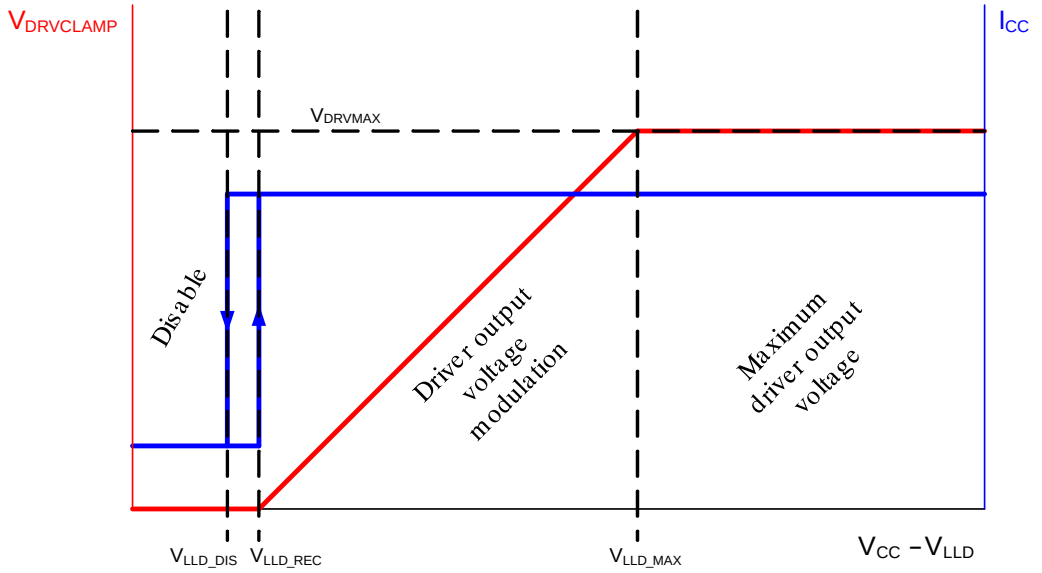

Figure 52. LLD Voltage to Driver Clamp and Current Consumption Characteristic (DRV Unloaded)

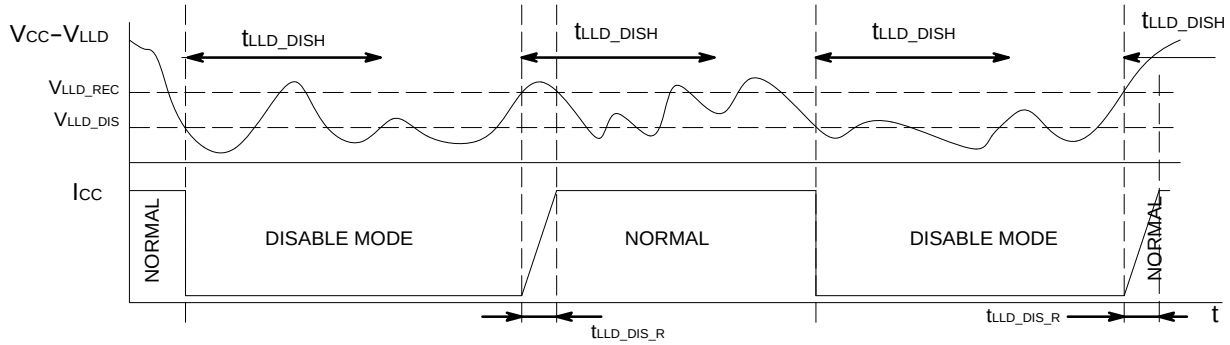

Figure 53. LLD Pin Disable Behavior in Time Domain

The two main SMPS applications that are using synchronous rectification systems today are flyback and LLC topologies. Different light load detection techniques are used in NCP43080 controller to reflect differences in operation of both mentioned applications.

Detail of the light load detection implementation technique used in NCP43080 in flyback topologies is displayed at Figure 54. Using a simple and cost effective peak detector implemented with a diode D1, resistors R1 through R3 and capacitors C2 and C3, the load level can be sensed. Output voltage of this detector on the LLD pin is referenced to controller VCC with an internal differential amplifier in NCP43080. The output of the differential amplifier is then used in two places. First the output is used in the driver block for gate drive clamp voltage adjustment. Next, the output signal is evaluated by a no-load detection comparator that activates IC disable mode in case the load is disconnected from the application output.

Share Feedback
Your Opinion Matters

Downloaded from Arrow.com.

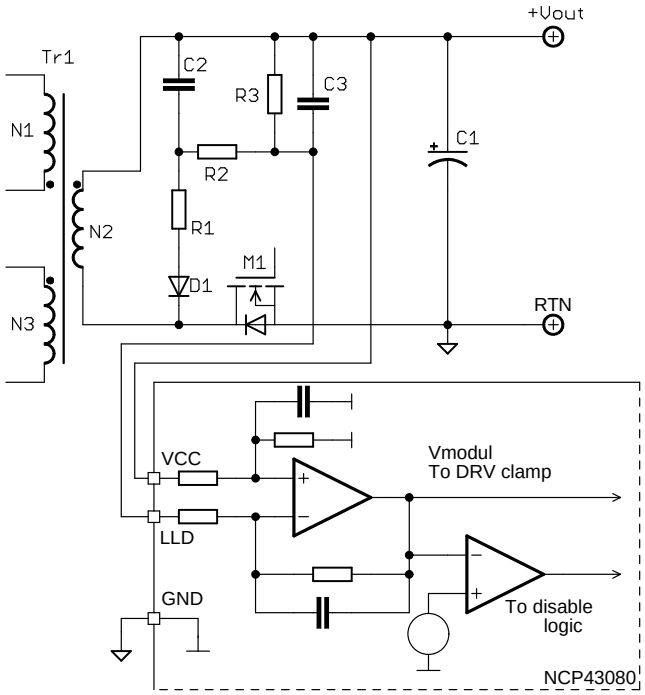

Figure 54. NCP43080 Light Load and No Load Detection Principle in Flyback Topologies

Operational waveforms related to the flyback LLD circuitry are provided in Figure 55. The SR MOSFET drain voltage drops to ~ 0 V when I_{SEC} current is flowing. When the SR MOSFET is conducting the capacitor C2 charges-up, causing the difference between the LLD pin and VCC pin to increase, and drop the LLD pin voltage. As the load decreases the secondary side currents flows for a shorter a shorter time. C2 has less time to accumulate charge and the voltage on the C2 decreases, because it is discharged by R2 and R3. This smaller voltage on C2 will cause the LLD pin voltage to increase towards V_{CC} and the difference between LLD and V_{CC} will go to zero. The output voltage then directly reduces DRV clamp voltage down from its maximum level. The DRV is then fully disabled when IC enters disable mode. The IC exits from disable mode when difference between LLD voltage and V_{CC} increases over V_{LLD_REC}. Resistors R2 and R3 are also used for voltage level adjustment and with capacitor C3 form low pass filter that filters relatively high speed ripple at C2. This low pass filter also reduces speed of state change of the SR controller from normal to disable mode or reversely. Time constant should be higher than feedback loop time constant to keep whole system stable.

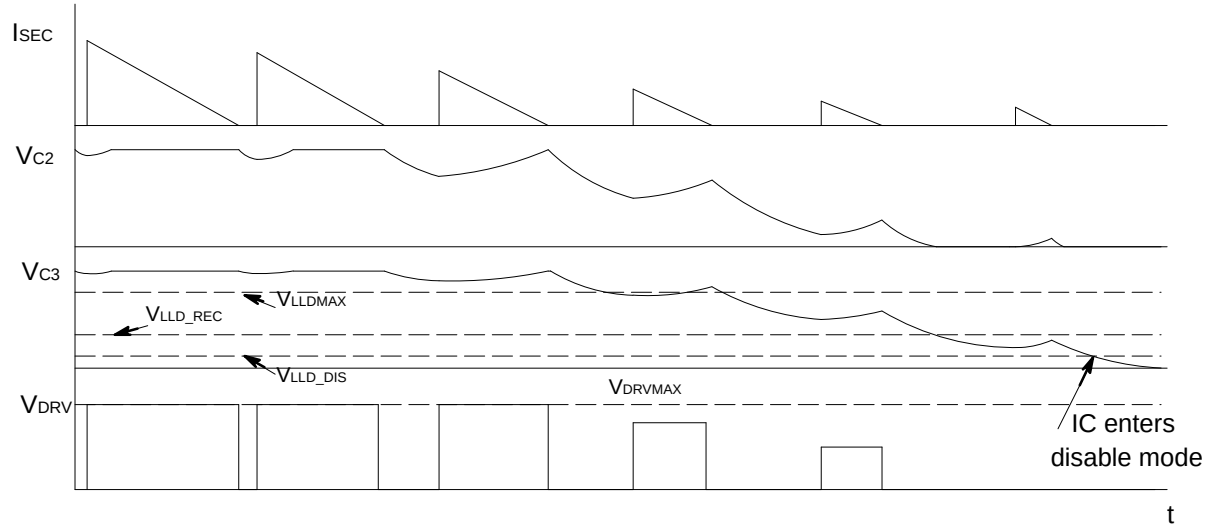

Figure 55. NCP43080 Driver Clamp Modulation Waveforms in Flyback Application Entering into Light/No Load Condition

Share Feedback
Your Opinion Matters

Downloaded from Arrow.com.

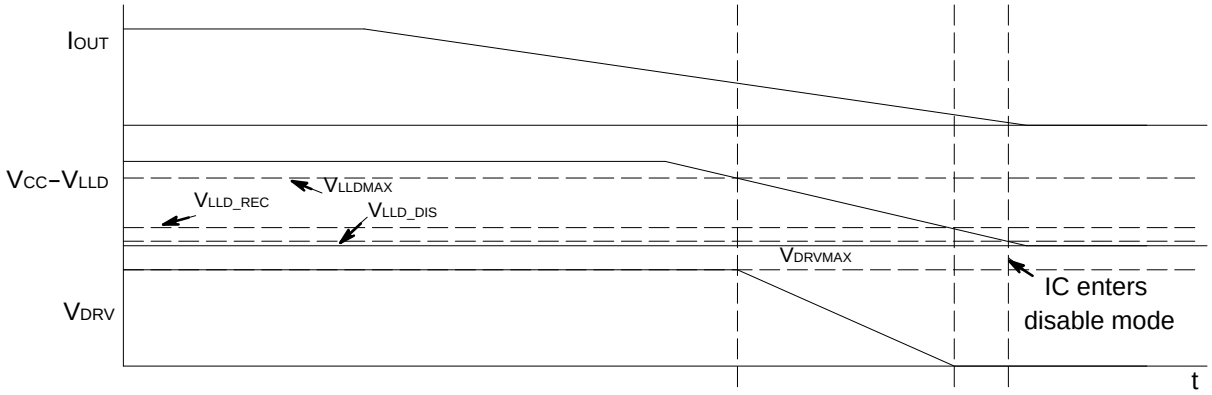

Figure 56. NCP43080 Driver Clamp Modulation Circuitry Transfer Characteristic in Flyback Application

The technique used for LLD detection in LLC is similar to the LLD detection method used in a flyback with the exception the D1 and D2 OR-ing diodes are used to measure the total duty cycle to see if it is operating in skip mode.

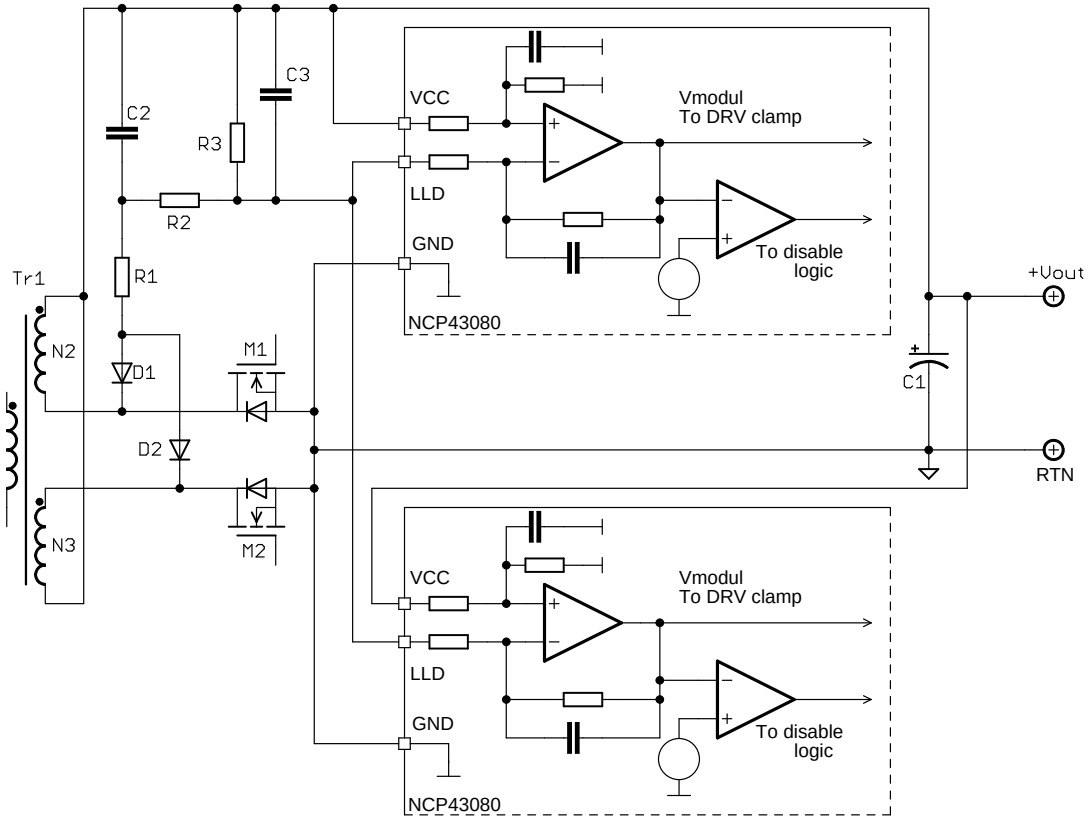

Figure 57. NCP43080 Light Load Detection in LLC Topology

The driver clamp modulation waveforms of NCP43080 in LLC are provided in Figure 58. The driver clamp voltage clips to its maximum level when LLC operates in normal mode. When the LLC starts to operate in skip mode the driver clamp voltage begins to decrease. The specific output current level is determined by skip duty cycle and detection circuit consists of R1, R2, R3, C2, C3 and diodes D1, D2. The NCP43080 enters disable mode in low load condition, when V_{CC}−V_{LLD} drops below V_{LLD_DIS} (0.9 V). Disable mode ends when this voltage increase above V_{LLD_REC} (1.0 V) Figure 59 shows how LLD voltage modulates the driver output voltage clamp.

Share Feedback
Your Opinion Matters

Downloaded from Arrow.com.

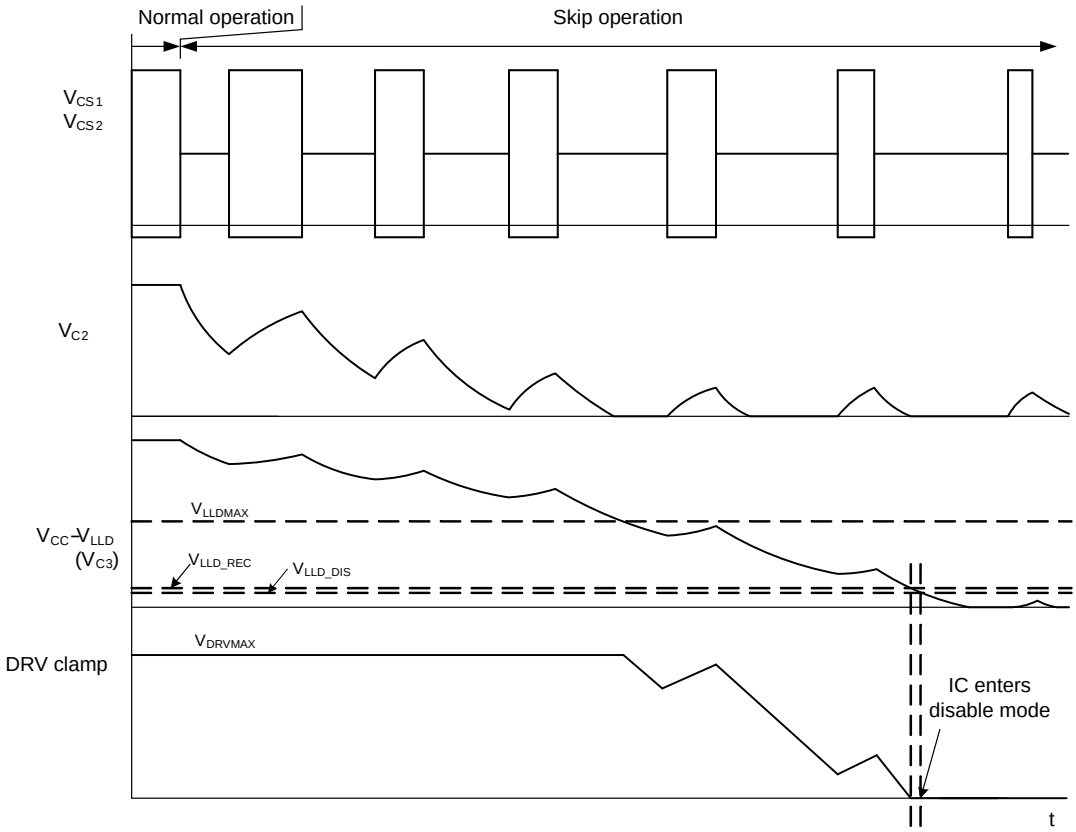

Figure 58. NCP43080 Driver Clamp Modulation Waveforms in LLC Application

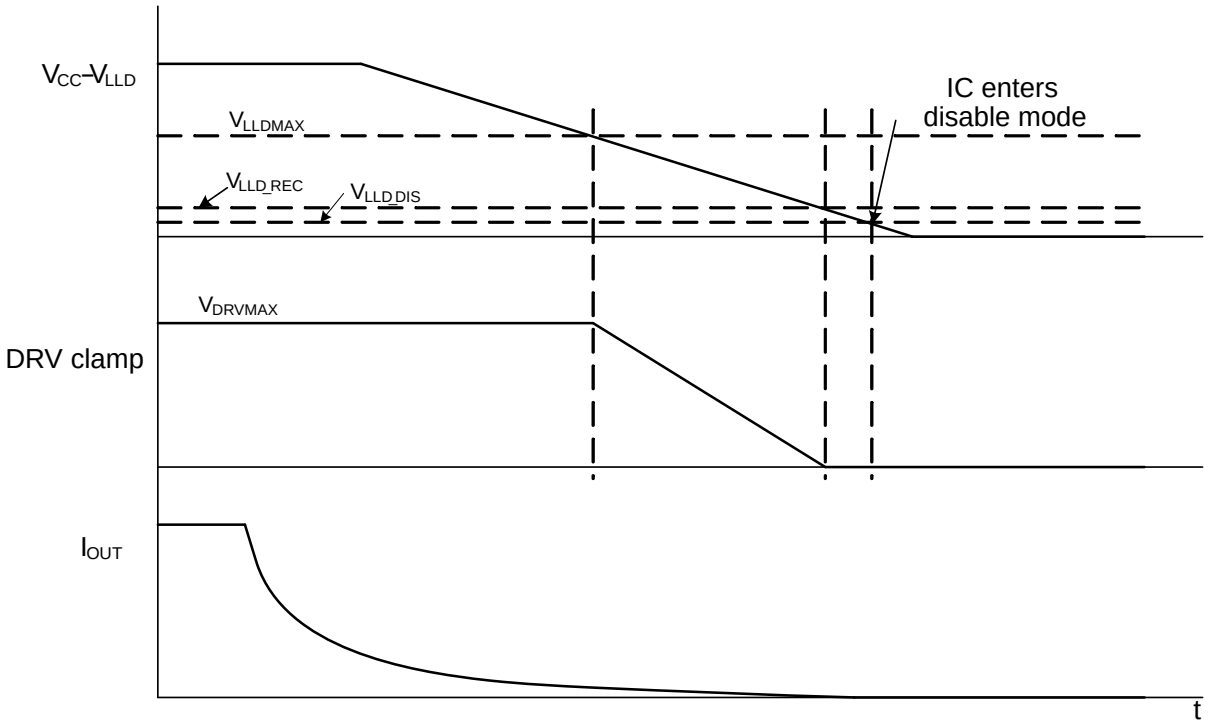

Figure 59. NCP43080 Driver Clamp Modulation Circuitry Characteristic in LLC Application

Share Feedback
Your Opinion Matters

Downloaded from Arrow.com.

There exist some LLC applications where behavior described above is not the best choice. These applications transfer significant portion of energy in a few first pulses in skip burst. It is good to keep SR fully working during skip mode to improve efficiency. There can be still saved some energy using LLD function by activation disable mode between skip bursts. Simplified schematic for this LLD behavior is shown in Figure 60. Operation waveforms for this option are provided in Figure 61. Capacitor C2 is charged to maximum voltage when LLC is switching. When there is no switching in skip, capacitor C2 is discharged by R2 and when LLD voltage referenced to VCC falls below V_{LLD_DIS} IC enters disable mode. Disable mode is ended when LLC starts switching.

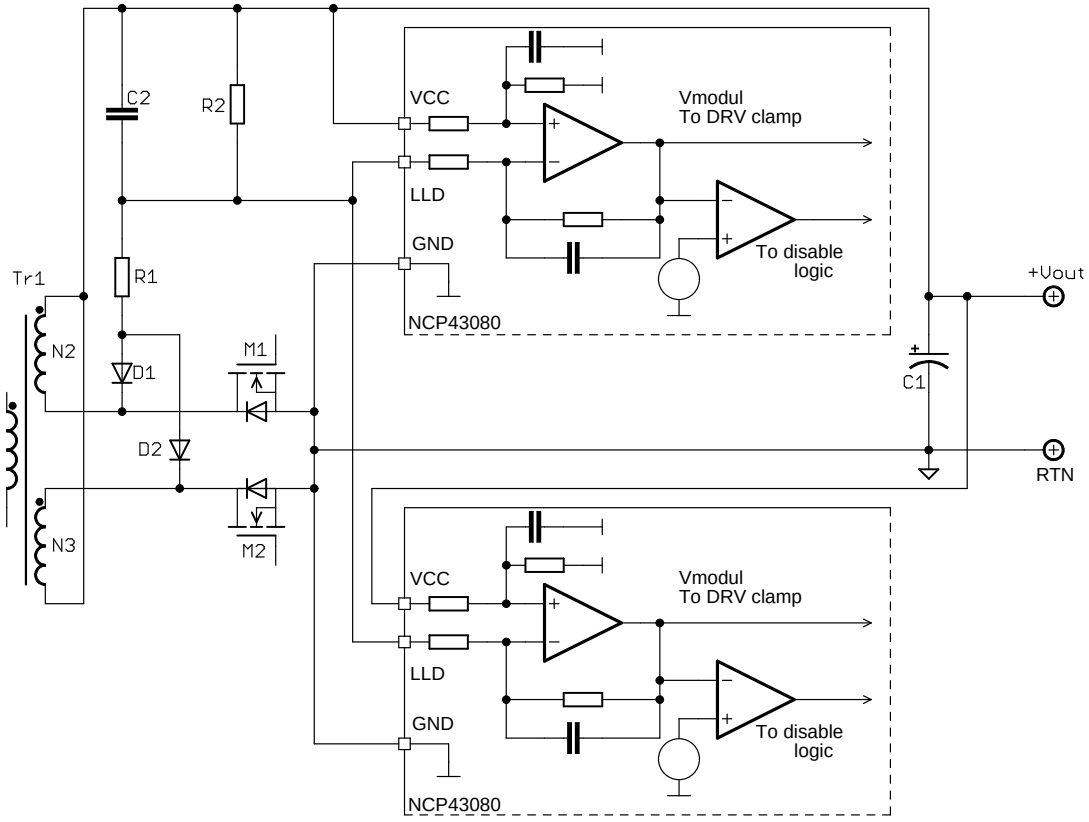

Figure 60. NCP43080 Light Load Detection in LLC Application – Other Option

Share Feedback
Your Opinion Matters

Downloaded from Arrow.com.

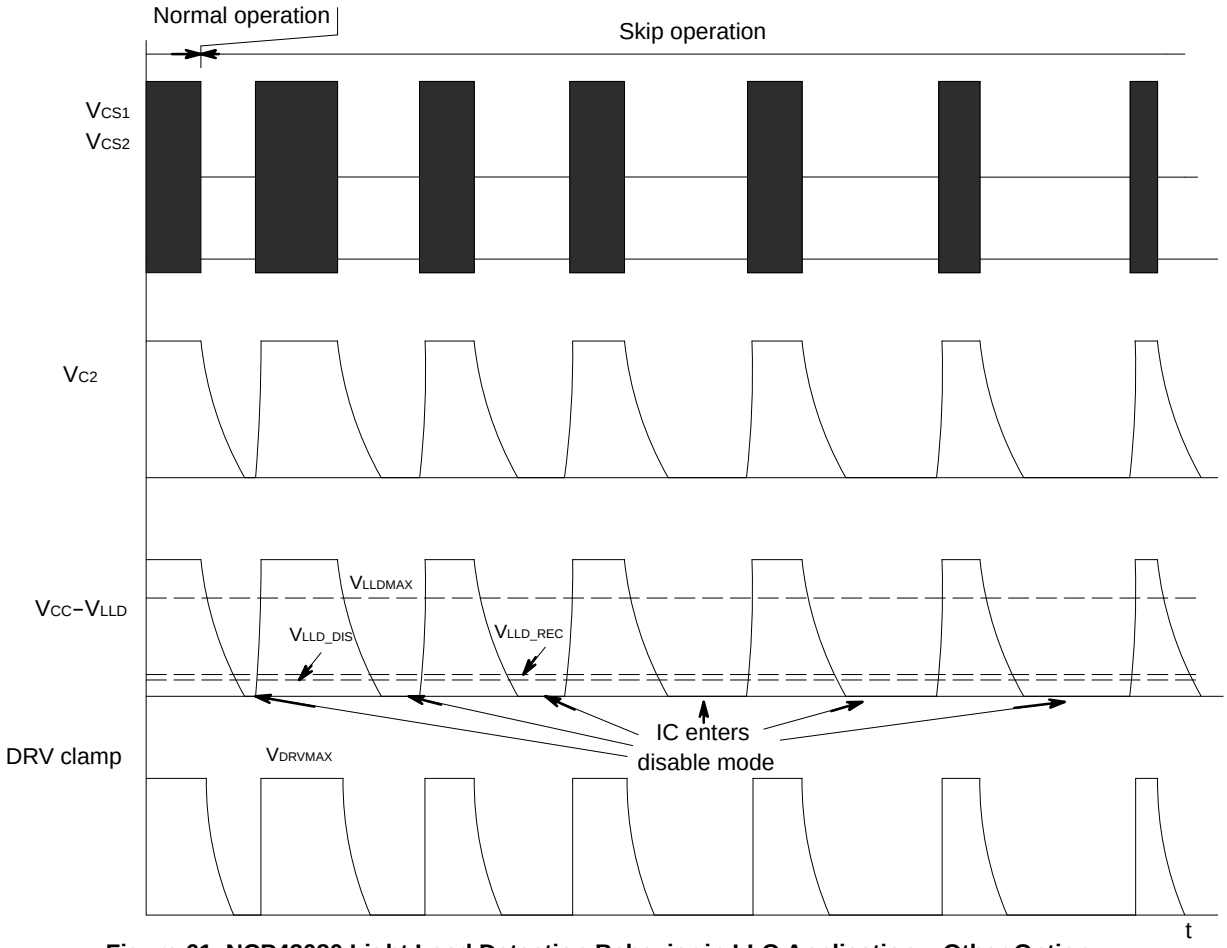

Figure 61. NCP43080 Light Load Detection Behavior in LLC Application – Other Option

Power Dissipation Calculation

It is important to consider the power dissipation in the MOSFET driver of a SR system. If no external gate resistor is used and the internal gate resistance of the MOSFET is very low, nearly all energy losses related to gate charge are dissipated in the driver. Thus it is necessary to check the SR driver power losses in the target application to avoid over temperature and to optimize efficiency.

In SR systems the body diode of the SR MOSFET starts conducting before SR MOSFET is turned-on, because there is some delay from $V_{TH_CS_ON}$ detect to turn-on the driver. On the other hand, the SR MOSFET turn off process always starts before the drain to source voltage rises up significantly. Therefore, the MOSFET switch always operates under Zero Voltage Switching (ZVS) conditions when in a synchronous rectification system.

The following steps show how to approximately calculate the power dissipation and DIE temperature of the NCP43080 controller. Note that real results can vary due to the effects of the PCB layout on the thermal resistance.

Step 1 – MOSFET Gate-to Source Capacitance:

During ZVS operation the gate to drain capacitance does not have a Miller effect like in hard switching systems because the drain to source voltage does not change (or its change is negligible).

Share Feedback
Your Opinion Matters

Downloaded from Arrow.com.

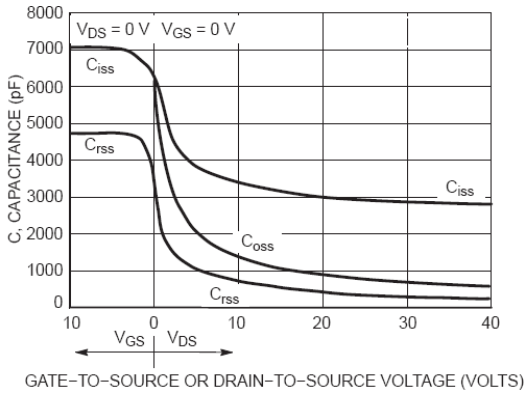

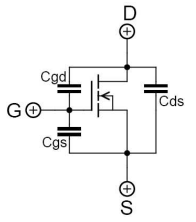

$$C_{iss} = C_{gs} + C_{gd}$$

$$C_{rss} = C_{gd}$$

$$C_{oss} = C_{ds} + C_{gd}$$

Figure 62. Typical MOSFET Capacitances Dependency on V_{DS} and V_{GS} Voltages

Therefore, the input capacitance of a MOSFET operating in ZVS mode is given by the parallel combination of the gate to source and gate to drain capacitances (i.e. C_{iss} capacitance for given gate to source voltage). The total gate charge, Q_{g_total}, of most MOSFETs on the market is defined for hard switching conditions. In order to accurately calculate the driving losses in a SR system, it is necessary to determine the gate charge of the MOSFET for operation specifically in a ZVS system. Some manufacturers define this parameter as Q_{g_ZVS}. Unfortunately, most datasheets do not provide this data. If the C_{iss} (or Q_{g_ZVS}) parameter is not available then it will need to be measured. Please note that the input capacitance is not linear (as shown Figure 62) and it needs to be characterized for a given gate voltage clamp level.

Step 2 – Gate Drive Losses Calculation:

Gate drive losses are affected by the gate driver clamp voltage. Gate driver clamp voltage selection depends on the type of MOSFET used (threshold voltage versus channel resistance). The total power losses (driving loses and conduction losses) should be considered when selecting the gate driver clamp voltage. Most of today's MOSFETs for SR systems feature low $R_{DS(on)}$ for 5 V V_{GS} voltage. The NCP43080 offers both a 5 V gate clamp and a 10 V gate clamp for those MOSFET that require higher gate to source voltage.

The total driving loss can be calculated using the selected gate driver clamp voltage and the input capacitance of the MOSFET:

$$P_{DRV_total} = V_{CC} \cdot V_{CLAMP} \cdot C_{g_ZVS} \cdot f_{SW} \quad \text{(eq. 9)}$$

Where:

V_{CC}	is the NCP43080 supply voltage
V_{CLAMP}	is the driver clamp voltage
C_{g_ZVS}	is the gate to source capacitance of the MOSFET in ZVS mode
f_{sw}	is the switching frequency of the target application

The total driving power loss won't only be dissipated in the IC, but also in external resistances like the external gate resistor (if used) and the MOSFET internal gate resistance (Figure 44). Because NCP43080 features a clamped driver, it's high side portion can be modeled as a regular driver switch with equivalent resistance and a series voltage source. The low side driver switch resistance does not drop immediately at turn-off, thus it is necessary to use an equivalent value ($R_{DRV_SIN_EQ}$) for calculations. This method simplifies power losses calculations and still provides acceptable accuracy. Internal driver power dissipation can then be calculated using Equation 10:

Share Feedback
Your Opinion Matters

Downloaded from Arrow.com.

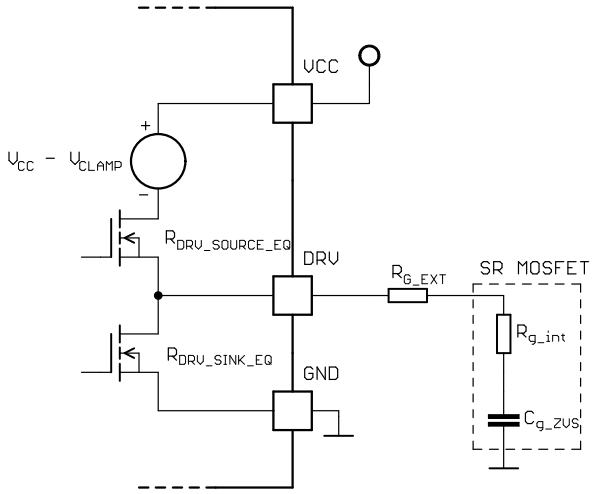

Figure 63. Equivalent Schematic of Gate Drive Circuitry

$$P_{DRV_IC} = \frac{1}{2} \cdot C_{g_ZVS} \cdot V_{CLAMP}^{\ 2} \cdot f_{SW} \cdot \left(\frac{R_{DRV_SINK_EQ}}{R_{DRV_SINK_EQ} + R_{G_EXT} + R_{g_int}} \right) + C_{g_ZVS} \cdot V_{CLAMP} \cdot f_{SW} \cdot \left(V_{CC} - V_{CLAMP} \right)$$

(eq. 10)

$$+ \frac{1}{2} \cdot C_{g_ZVS} \cdot V_{CLAMP}^{\ 2} \cdot f_{SW} \cdot \left(\frac{R_{DRV_SOURCE_EQ}}{R_{DRV_SOURCE_EQ} + R_{G_EXT} + R_{g_int}} \right)$$

Where:

$R_{DRV_SINK_EQ}$	is the NCP43080x driver low side switch equivalent resistance (0.5 Ω)
$R_{DRV_SOURCE_EQ}$	is the NCP43080x driver high side switch equivalent resistance (1.2 Ω)
R_{G_EXT}	is the external gate resistor (if used)
R_{g_int}	is the internal gate resistance of the MOSFET

Step 3 – IC Consumption Calculation:

In this step, power dissipation related to the internal IC consumption is calculated. This power loss is given by the I_{CC} current and the IC supply voltage. The I_{CC} current depends on switching frequency and also on the selected min t_{ON} and t_{OFF} periods because there is current flowing out from the min t_{ON} and t_{OFF} pins. The most accurate method for calculating these losses is to measure the I_{CC} current when C_{DRV} = 0 nF and the IC is switching at the target frequency with given MIN_TON and MIN_TOFF adjust resistors. IC consumption losses can be calculated as:

$$P_{CC} = V_{CC} \cdot I_{CC} \qquad \text{(eq. 11)}$$

Step 4 – IC Die Temperature Arise Calculation:

The die temperature can be calculated now that the total internal power losses have been determined (driver losses plus internal IC consumption losses). The package thermal resistance is specified in the maximum ratings table for a 35 μm thin copper layer with no extra copper plates on any pin (i.e. just 0.5 mm trace to each pin with standard soldering points are used).

The DIE temperature is calculated as:

$$T_{DIE} = \left(P_{DRV_IC} + P_{CC} \right) \cdot R_{\theta J-A} + T_A \qquad \text{(eq. 12)}$$

Where:

P_{DRV_IC}	is the IC driver internal power dissipation
P_{CC}	is the IC control internal power dissipation
$R_{\theta JA}$	is the thermal resistance from junction to ambient
T_A	is the ambient temperature

Share Feedback
Your Opinion Matters

Downloaded from Arrow.com.

PRODUCT OPTIONS

OPN	Package	UVLO [V]	DRV clamp [V]	Pin 5 function	Usage
NCP43080ADR2G	SOIC8	4.5	4.7	NC	LLC, CCM flyback, DCM flyback, forward, QR, QR with primary side CCM control
NCP43080AMTTWG	WDFN8	4.5	4.7	NC	
NCP43080DDR2G	SOIC8	4.5	9.5	NC	
NCP43080DMNTWG	DFN8	4.5	9.5	NC	
NCP43080DMTTWG	WDFN8	4.5	9.5	NC	
NCP43080QDR2G	SOIC8	4.5	9.5	MAX_TON	QR with forced CCM from secondary side

ORDERING INFORMATION

Device	Package	Package marking	Packing	Shipping†
NCP43080ADR2G	SOIC8	43080A	SOIC-8 (Pb-Free)	2500 /Tape & Reel
NCP43080DDR2G		43080D		
NCP43080DMTTWG	WDFN8	FD	WDFN-8 (Pb-Free)	3000 /Tape & Reel
NCP43080DMNTWG	DFN8	43080D	DFN-8 (Pb-Free)	4000 /Tape & Reel

DISCONTINUED (Note 2)

NCP43080QDR2G	SOIC8	43080Q	SOIC-8 (Pb-Free)	2500 /Tape & Reel
NCP43080AMTTWG	WDFN8	FA	WDFN-8 (Pb-Free)	3000 /Tape & Reel

†For information on tape and reel specifications, including part orientation and tape sizes, please refer to our Tape and Reel Packaging Specifications Brochure, BRD8011/D.

2. **DISCONTINUED:** These devices are not recommended for new design. Please contact your **onsemi** representative for information. The most current information on these devices may be available on www.onsemi.com.

Share Feedback
Your Opinion Matters

Downloaded from Arrow.com.

DFN8, 4x4
CASE 488AF
ISSUE C

DATE 15 JAN 2009

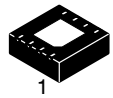

SCALE 2:1

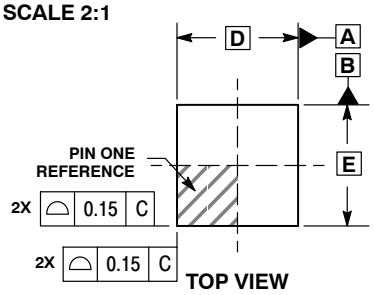

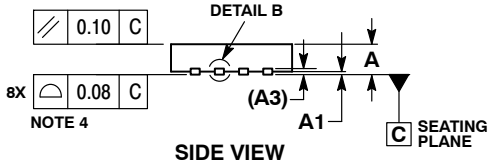

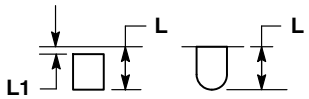

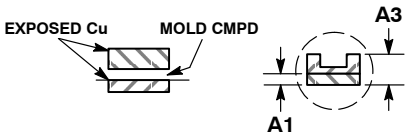

NOTES:
1. DIMENSIONS AND TOLERANCING PER ASME Y14.5M, 1994.
2. CONTROLLING DIMENSION: MILLIMETERS.
3. DIMENSION b APPLIES TO PLATED TERMINAL AND IS MEASURED BETWEEN 0.15 AND 0.30MM FROM TERMINAL TIP.
4. COPLANARITY APPLIES TO THE EXPOSED PAD AS WELL AS THE TERMINALS.
5. DETAILS A AND B SHOW OPTIONAL CONSTRUCTIONS FOR TERMINALS.

	MILLIMETERS	
DIM	MIN	MAX
A	0.80	1.00
A1	0.00	0.05
A3	0.20 REF	
b	0.25	0.35
D	4.00 BSC	
D2	1.91	2.21
E	4.00 BSC	
E2	2.09	2.39
e	0.80 BSC	
K	0.20	---
L	0.30	0.50
L1	---	0.15

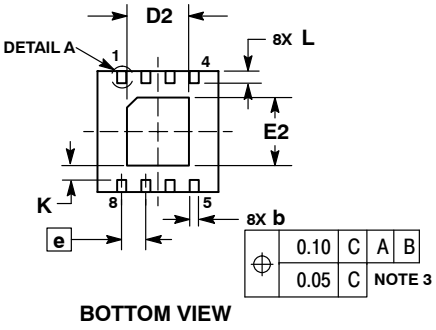

GENERIC MARKING DIAGRAM*

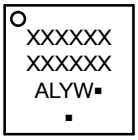

XXXX = Specific Device Code
A = Assembly Location
L = Wafer Lot
Y = Year
W = Work Week
▪ = Pb−Free Package

(Note: Microdot may be in either location)

*This information is generic. Please refer to device data sheet for actual part marking. Pb−Free indicator, “G” or microdot “ ▪”, may or may not be present.

SOLDERING FOOTPRINT*

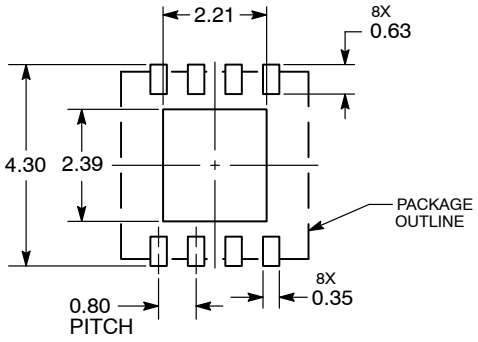

DIMENSIONS: MILLIMETERS

*For additional information on our Pb−Free strategy and soldering details, please download the ON Semiconductor Soldering and Mounting Techniques Reference Manual, SOLDERRM/D.

DOCUMENT NUMBER:	**98AON15232D**	Electronic versions are uncontrolled except when accessed directly from the Document Repository. Printed versions are uncontrolled except when stamped “CONTROLLED COPY” in red.
DESCRIPTION:	**DFN8, 4X4, 0.8P**	**PAGE 1 OF 1**

onsemi and onsemi are trademarks of Semiconductor Components Industries, LLC dba **onsemi** or its subsidiaries in the United States and/or other countries. **onsemi** reserves the right to make changes without further notice to any products herein. **onsemi** makes no warranty, representation or guarantee regarding the suitability of its products for any particular purpose, nor does **onsemi** assume any liability arising out of the application or use of any product or circuit, and specifically disclaims any and all liability, including without limitation special, consequential or incidental damages. **onsemi** does not convey any license under its patent rights nor the rights of others.

© Semiconductor Components Industries, LLC, 2004

Downloaded from Arrow.com.



SCALE 4:1

WDFN8 2x2, 0.5P
CASE 511AT
ISSUE O

DATE 26 FEB 2010

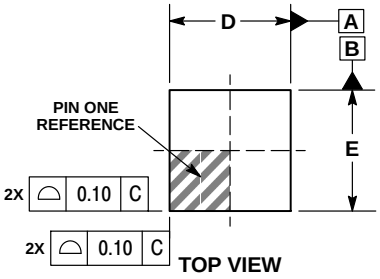

TOP VIEW

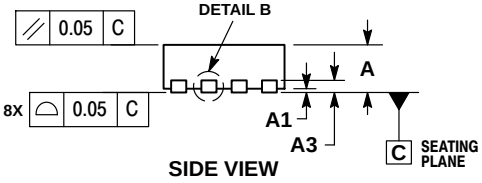

SIDE VIEW

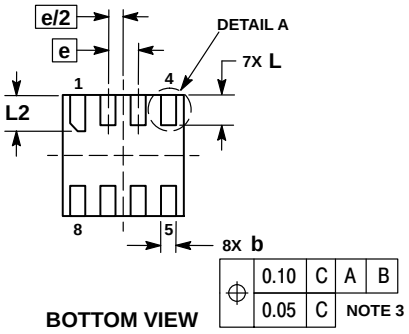

BOTTOM VIEW

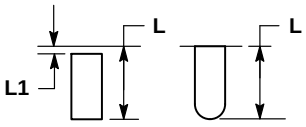

DETAIL A
ALTERNATE TERMINAL CONSTRUCTIONS

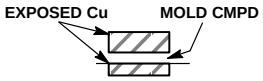

DETAIL B
ALTERNATE CONSTRUCTIONS

NOTES:
1. DIMENSIONING AND TOLERANCING PER ASME Y14.5M, 1994.
2. CONTROLLING DIMENSION: MILLIMETERS.
3. DIMENSION b APPLIES TO PLATED TERMINAL AND IS MEASURED BETWEEN 0.15 AND 0.30 MM FROM TERMINAL TIP.

	MILLIMETERS	
DIM	MIN	MAX
A	0.70	0.80
A1	0.00	0.05
A3	0.20 REF	
b	0.20	0.30
D	2.00 BSC	
E	2.00 BSC	
e	0.50 BSC	
L	0.40	0.60
L1	---	0.15
L2	0.50	0.70

GENERIC MARKING DIAGRAM*

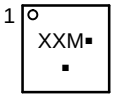

XX = Specific Device Code
M = Date Code
▪ = Pb−Free Device

(Note: Microdot may be in either location)

*This information is generic. Please refer to device data sheet for actual part marking. Pb−Free indicator, “G” or microdot “ ▪”, may or may not be present.

RECOMMENDED SOLDERING FOOTPRINT*

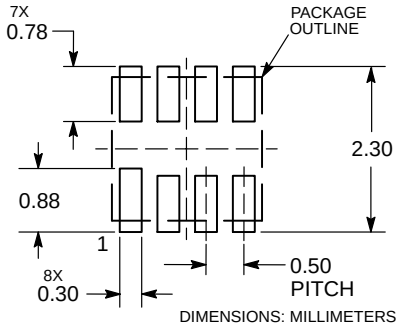

DIMENSIONS: MILLIMETERS

*For additional information on our Pb−Free strategy and soldering details, please download the **onsemi** Soldering and Mounting Techniques Reference Manual, SOLDERRM/D.

DOCUMENT NUMBER:	**98AON48654E**	Electronic versions are uncontrolled except when accessed directly from the Document Repository. Printed versions are uncontrolled except when stamped “CONTROLLED COPY” in red.
DESCRIPTION:	**WDFN8, 2X2, 0.5 P**	**PAGE 1 OF 1**

onsemi and onsemi are trademarks of Semiconductor Components Industries, LLC dba **onsemi** or its subsidiaries in the United States and/or other countries. **onsemi** reserves the right to make changes without further notice to any products herein. **onsemi** makes no warranty, representation or guarantee regarding the suitability of its products for any particular purpose, nor does **onsemi** assume any liability arising out of the application or use of any product or circuit, and specifically disclaims any and all liability, including without limitation special, consequential or incidental damages. **onsemi** does not convey any license under its patent rights nor the rights of others.

Downloaded from Arrow.com.



SCALE 1:1

SOIC−8 NB
CASE 751−07
ISSUE AK

DATE 16 FEB 2011

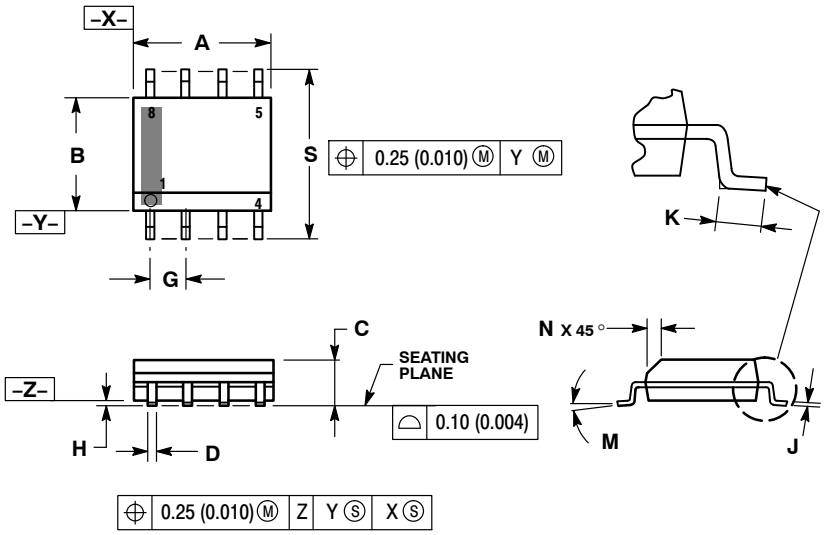

NOTES:
1. DIMENSIONING AND TOLERANCING PER ANSI Y14.5M, 1982.
2. CONTROLLING DIMENSION: MILLIMETER.
3. DIMENSION A AND B DO NOT INCLUDE MOLD PROTRUSION.
4. MAXIMUM MOLD PROTRUSION 0.15 (0.006) PER SIDE.
5. DIMENSION D DOES NOT INCLUDE DAMBAR PROTRUSION. ALLOWABLE DAMBAR PROTRUSION SHALL BE 0.127 (0.005) TOTAL IN EXCESS OF THE D DIMENSION AT MAXIMUM MATERIAL CONDITION.
6. 751−01 THRU 751−06 ARE OBSOLETE. NEW STANDARD IS 751−07.

	MILLIMETERS		INCHES	
DIM	MIN	MAX	MIN	MAX
A	4.80	5.00	0.189	0.197
B	3.80	4.00	0.150	0.157
C	1.35	1.75	0.053	0.069
D	0.33	0.51	0.013	0.020
G	1.27 BSC		0.050 BSC	
H	0.10	0.25	0.004	0.010
J	0.19	0.25	0.007	0.010
K	0.40	1.27	0.016	0.050
M	0°	8°	0°	8°
N	0.25	0.50	0.010	0.020
S	5.80	6.20	0.228	0.244

SOLDERING FOOTPRINT*

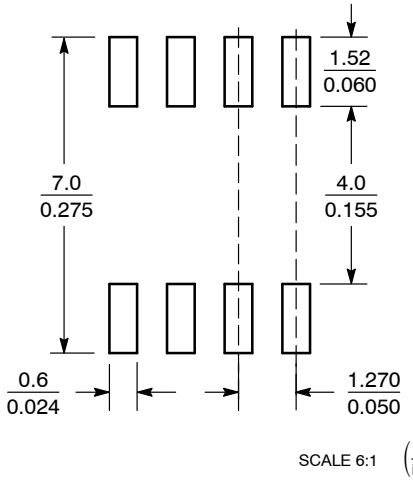

SCALE 6:1 (mm / inches)

*For additional information on our Pb−Free strategy and soldering details, please download the **onsemi** Soldering and Mounting Techniques Reference Manual, SOLDERRM/D.

GENERIC MARKING DIAGRAM*

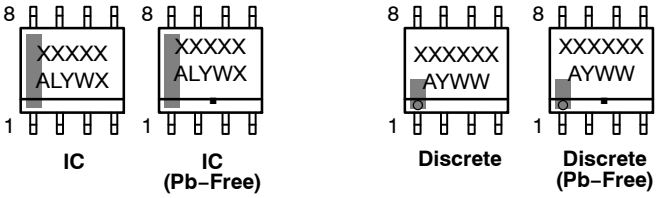

XXXXX = Specific Device Code
A = Assembly Location
L = Wafer Lot
Y = Year
W = Work Week
▪ = Pb−Free Package

XXXXXX = Specific Device Code
A = Assembly Location
Y = Year
WW = Work Week
▪ = Pb−Free Package

*This information is generic. Please refer to device data sheet for actual part marking. Pb−Free indicator, "G" or microdot "▪", may or may not be present. Some products may not follow the Generic Marking.

STYLES ON PAGE 2

DOCUMENT NUMBER:	**98ASB42564B**	Electronic versions are uncontrolled except when accessed directly from the Document Repository. Printed versions are uncontrolled except when stamped "CONTROLLED COPY" in red.
DESCRIPTION:	**SOIC−8 NB**	**PAGE 1 OF 2**

onsemi and onsemi are trademarks of Semiconductor Components Industries, LLC dba **onsemi** or its subsidiaries in the United States and/or other countries. **onsemi** reserves the right to make changes without further notice to any products herein. **onsemi** makes no warranty, representation or guarantee regarding the suitability of its products for any particular purpose, nor does **onsemi** assume any liability arising out of the application or use of any product or circuit, and specifically disclaims any and all liability, including without limitation special, consequential or incidental damages. **onsemi** does not convey any license under its patent rights nor the rights of others.

© Semiconductor Components Industries, LLC, 2019

Downloaded from Arrow.com.

SOIC−8 NB
CASE 751−07
ISSUE AK

DATE 16 FEB 2011

STYLE 1:
PIN 1. EMITTER
2. COLLECTOR
3. COLLECTOR
4. EMITTER
5. EMITTER
6. BASE
7. BASE
8. EMITTER

STYLE 2:
PIN 1. COLLECTOR, DIE, #1
2. COLLECTOR, #1
3. COLLECTOR, #2
4. COLLECTOR, #2
5. BASE, #2
6. EMITTER, #2
7. BASE, #1
8. EMITTER, #1

STYLE 3:
PIN 1. DRAIN, DIE #1
2. DRAIN, #1
3. DRAIN, #2
4. DRAIN, #2
5. GATE, #2
6. SOURCE, #2
7. GATE, #1
8. SOURCE, #1

STYLE 4:
PIN 1. ANODE
2. ANODE
3. ANODE
4. ANODE
5. ANODE
6. ANODE
7. ANODE
8. COMMON CATHODE

STYLE 5:
PIN 1. DRAIN
2. DRAIN
3. DRAIN
4. DRAIN
5. GATE
6. GATE
7. SOURCE
8. SOURCE

STYLE 6:
PIN 1. SOURCE
2. DRAIN
3. DRAIN
4. SOURCE
5. SOURCE
6. GATE
7. GATE
8. SOURCE

STYLE 7:
PIN 1. INPUT
2. EXTERNAL BYPASS
3. THIRD STAGE SOURCE
4. GROUND
5. DRAIN
6. GATE 3
7. SECOND STAGE Vd
8. FIRST STAGE Vd

STYLE 8:
PIN 1. COLLECTOR, DIE #1
2. BASE, #1
3. BASE, #2
4. COLLECTOR, #2
5. COLLECTOR, #2
6. EMITTER, #2
7. EMITTER, #1
8. COLLECTOR, #1

STYLE 9:
PIN 1. EMITTER, COMMON
2. COLLECTOR, DIE #1
3. COLLECTOR, DIE #2
4. EMITTER, COMMON
5. EMITTER, COMMON
6. BASE, DIE #2
7. BASE, DIE #1
8. EMITTER, COMMON

STYLE 10:
PIN 1. GROUND
2. BIAS 1
3. OUTPUT
4. GROUND
5. GROUND
6. BIAS 2
7. INPUT
8. GROUND

STYLE 11:
PIN 1. SOURCE 1
2. GATE 1
3. SOURCE 2
4. GATE 2
5. DRAIN 2
6. DRAIN 2
7. DRAIN 1
8. DRAIN 1

STYLE 12:
PIN 1. SOURCE
2. SOURCE
3. SOURCE
4. GATE
5. DRAIN
6. DRAIN
7. DRAIN
8. DRAIN

STYLE 13:
PIN 1. N.C.
2. SOURCE
3. SOURCE
4. GATE
5. DRAIN
6. DRAIN
7. DRAIN
8. DRAIN

STYLE 14:
PIN 1. N−SOURCE
2. N−GATE
3. P−SOURCE
4. P−GATE
5. P−DRAIN
6. P−DRAIN
7. N−DRAIN
8. N−DRAIN

STYLE 15:
PIN 1. ANODE 1
2. ANODE 1
3. ANODE 1
4. ANODE 1
5. CATHODE, COMMON
6. CATHODE, COMMON
7. CATHODE, COMMON
8. CATHODE, COMMON

STYLE 16:
PIN 1. EMITTER, DIE #1
2. BASE, DIE #1
3. EMITTER, DIE #2
4. BASE, DIE #2
5. COLLECTOR, DIE #2
6. COLLECTOR, DIE #2
7. COLLECTOR, DIE #1
8. COLLECTOR, DIE #1

STYLE 17:
PIN 1. VCC
2. V2OUT
3. V1OUT
4. TXE
5. RXE
6. VEE
7. GND
8. ACC

STYLE 18:
PIN 1. ANODE
2. ANODE
3. SOURCE
4. GATE
5. DRAIN
6. DRAIN
7. CATHODE
8. CATHODE

STYLE 19:
PIN 1. SOURCE 1
2. GATE 1
3. SOURCE 2
4. GATE 2
5. DRAIN 2
6. MIRROR 2
7. DRAIN 1
8. MIRROR 1

STYLE 20:
PIN 1. SOURCE (N)
2. GATE (N)
3. SOURCE (P)
4. GATE (P)
5. DRAIN
6. DRAIN
7. DRAIN
8. DRAIN

STYLE 21:
PIN 1. CATHODE 1
2. CATHODE 2
3. CATHODE 3
4. CATHODE 4
5. CATHODE 5
6. COMMON ANODE
7. COMMON ANODE
8. CATHODE 6

STYLE 22:
PIN 1. I/O LINE 1
2. COMMON CATHODE/VCC
3. COMMON CATHODE/VCC
4. I/O LINE 3
5. COMMON ANODE/GND
6. I/O LINE 4
7. I/O LINE 5
8. COMMON ANODE/GND

STYLE 23:
PIN 1. LINE 1 IN
2. COMMON ANODE/GND
3. COMMON ANODE/GND
4. LINE 2 IN
5. LINE 2 OUT
6. COMMON ANODE/GND
7. COMMON ANODE/GND
8. LINE 1 OUT

STYLE 24:
PIN 1. BASE
2. EMITTER
3. COLLECTOR/ANODE
4. COLLECTOR/ANODE
5. CATHODE
6. CATHODE
7. COLLECTOR/ANODE
8. COLLECTOR/ANODE

STYLE 25:
PIN 1. VIN
2. N/C
3. REXT
4. GND
5. IOUT
6. IOUT
7. IOUT
8. IOUT

STYLE 26:
PIN 1. GND
2. dv/dt
3. ENABLE
4. ILIMIT
5. SOURCE
6. SOURCE
7. SOURCE
8. VCC

STYLE 27:
PIN 1. ILIMIT
2. OVLO
3. UVLO
4. INPUT+
5. SOURCE
6. SOURCE
7. SOURCE
8. DRAIN

STYLE 28:
PIN 1. SW_TO_GND
2. DASIC_OFF
3. DASIC_SW_DET
4. GND
5. V_MON
6. VBULK
7. VBULK
8. VIN

STYLE 29:
PIN 1. BASE, DIE #1
2. EMITTER, #1
3. BASE, #2
4. EMITTER, #2
5. COLLECTOR, #2
6. COLLECTOR, #2
7. COLLECTOR, #1
8. COLLECTOR, #1

STYLE 30:
PIN 1. DRAIN 1
2. DRAIN 1
3. GATE 2
4. SOURCE 2
5. SOURCE 1/DRAIN 2
6. SOURCE 1/DRAIN 2
7. SOURCE 1/DRAIN 2
8. GATE 1

DOCUMENT NUMBER:	**98ASB42564B**	Electronic versions are uncontrolled except when accessed directly from the Document Repository. Printed versions are uncontrolled except when stamped "CONTROLLED COPY" in red.	
DESCRIPTION:	**SOIC−8 NB**		**PAGE 2 OF 2**

onsemi and ONSEMI are trademarks of Semiconductor Components Industries, LLC dba **onsemi** or its subsidiaries in the United States and/or other countries. **onsemi** reserves the right to make changes without further notice to any products herein. **onsemi** makes no warranty, representation or guarantee regarding the suitability of its products for any particular purpose, nor does **onsemi** assume any liability arising out of the application or use of any product or circuit, and specifically disclaims any and all liability, including without limitation special, consequential or incidental damages. **onsemi** does not convey any license under its patent rights nor the rights of others.

© Semiconductor Components Industries, LLC, 2019

Downloaded from Arrow.com.

onsemi, ONSEMI , and other names, marks, and brands are registered and/or common law trademarks of Semiconductor Components Industries, LLC dba "**onsemi**" or its affiliates and/or subsidiaries in the United States and/or other countries. **onsemi** owns the rights to a number of patents, trademarks, copyrights, trade secrets, and other intellectual property. A listing of **onsemi**'s product/patent coverage may be accessed at www.onsemi.com/site/pdf/Patent−Marking.pdf. **onsemi** reserves the right to make changes at any time to any products or information herein, without notice. The information herein is provided "as−is" and **onsemi** makes no warranty, representation or guarantee regarding the accuracy of the information, product features, availability, functionality, or suitability of its products for any particular purpose, nor does **onsemi** assume any liability arising out of the application or use of any product or circuit, and specifically disclaims any and all liability, including without limitation special, consequential or incidental damages. Buyer is responsible for its products and applications using **onsemi** products, including compliance with all laws, regulations and safety requirements or standards, regardless of any support or applications information provided by **onsemi**. "Typical" parameters which may be provided in **onsemi** data sheets and/or specifications can and do vary in different applications and actual performance may vary over time. All operating parameters, including "Typicals" must be validated for each customer application by customer's technical experts. **onsemi** does not convey any license under any of its intellectual property rights nor the rights of others. **onsemi** products are not designed, intended, or authorized for use as a critical component in life support systems or any FDA Class 3 medical devices or medical devices with a same or similar classification in a foreign jurisdiction or any devices intended for implantation in the human body. Should Buyer purchase or use **onsemi** products for any such unintended or unauthorized application, Buyer shall indemnify and hold **onsemi** and its officers, employees, subsidiaries, affiliates, and distributors harmless against all claims, costs, damages, and expenses, and reasonable attorney fees arising out of, directly or indirectly, any claim of personal injury or death associated with such unintended or unauthorized use, even if such claim alleges that **onsemi** was negligent regarding the design or manufacture of the part. **onsemi** is an Equal Opportunity/Affirmative Action Employer. This literature is subject to all applicable copyright laws and is not for resale in any manner.

ADDITIONAL INFORMATION

TECHNICAL PUBLICATIONS:
Technical Library: www.onsemi.com/design/resources/technical−documentation
onsemi Website: www.onsemi.com

ONLINE SUPPORT: www.onsemi.com/support
For additional information, please contact your local Sales Representative at www.onsemi.com/support/sales

◊

Downloaded from Arrow.com.