TOSHIBA BiCD Process Integrated Circuit Silicon Monolithic

TB67H451AFNG

PWM Chopper Type DC Brushed Motor Driver

The TB67H451AFNG is a PWM chopper type DC brushed motor driver.

One channel of motor output block is embedded.

Fabricated with the BiCD process, the TB67H451AFNG is rated at output voltage 50 V, maximum current 3.5 A.

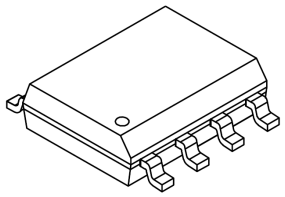

P-HSOP8-0405-1.27-002

Weight: 0.075 g (typ.)

Features

- Monolithic IC using BiCD process
- Capable of PWM constant current drive and direct PWM drive
- Supporting 4 operation modes, Forward / Reverse / Brake / STOP (OFF)
- Built-in output MOSFET with Low on-resistance (High side + low side=0.6 Ω(typ.))
- Realization of high voltage and large current drive (Refer to “Absolute maximum ratings” and “Operating range”.)
- Built-in various error detection functions (Thermal shutdown (TSD), over current detection (ISD), and Under voltage lockout(UVLO))
- Built-in VCC regulator for the internal circuit operation.

Note: Please be careful about the thermal conditions during use.

Start of commercial production
2021-04

©2026
Toshiba Electronic Devices & Storage Corporation

Downloaded from Arrow.com.

Pin Assignment

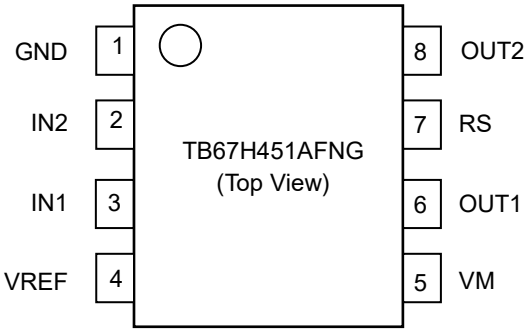

Downloaded from Arrow.com.

Block Diagram

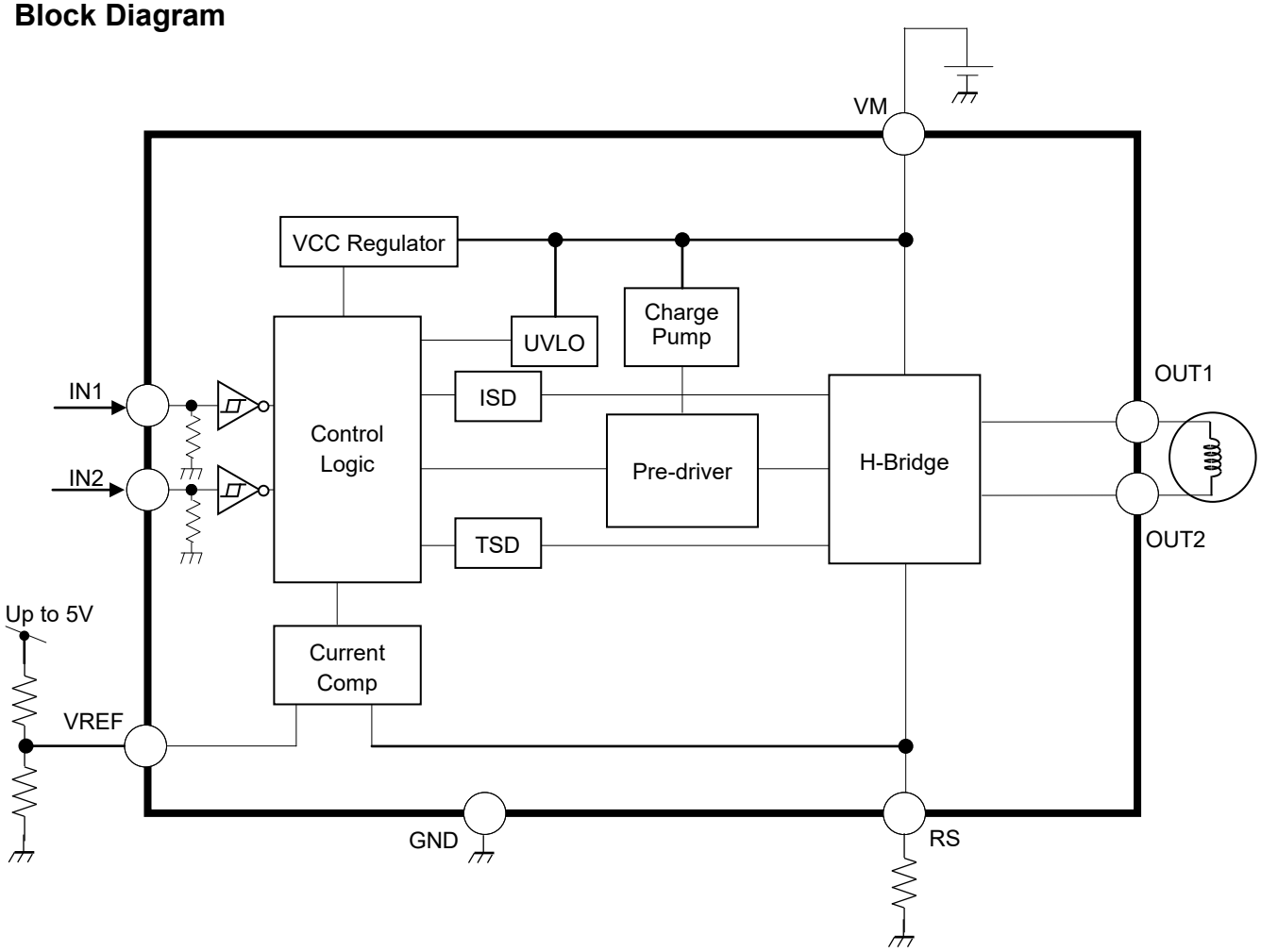

Some of the functional blocks, circuits, or constants in the block diagram may be omitted or simplified for explanatory purposes.

Note: All the grounding wires of the TB67H451AFNG must run on the solder mask of the PCB. It must also be externally terminated at a single point. Also, the grounding method should be considered for efficient heat dissipation.

Careful attention should be paid to the layout of the output, VM and GND traces, to avoid short circuits across output pins or to the power supply or ground. If such a short circuit occurs, the device may be permanently damaged.
Also, the utmost care should be taken for pattern designing and implementation of the device since it has power supply pins (VM, RS, OUT1, OUT2, and GND) through which a particularly large current may run. If these pins are wired incorrectly, an operation error may occur or the device may be destroyed.

The logic input pins must also be wired correctly. Otherwise, the device may be damaged owing to a current running through the IC that is larger than the specified current. Careful attention should be paid to design patterns and mountings.

Downloaded from Arrow.com.

Pin Description

Pin description of pin No. 1 to 8.

Pin No.	Pin name	Description
1	GND	Ground pin
2	IN2	Logic input pin 2
3	IN1	Logic input pin 1
4	VREF	Motor output current setting pin
5	VM	Motor power supply
6	OUT1	Motor output pin 1
7	RS	Motor output current sense pin
8	OUT2	Motor output pin 2

Downloaded from Arrow.com.

Input and Output Equivalent Circuit

Pin name	Equivalent circuit
IN1 IN2	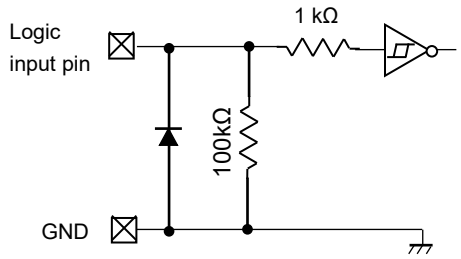
VREF	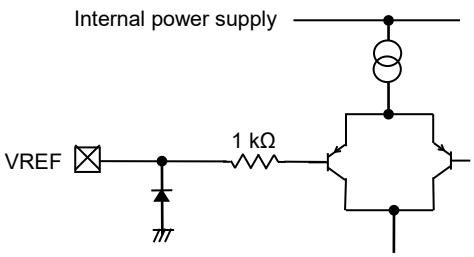
OUT1 OUT2 RS	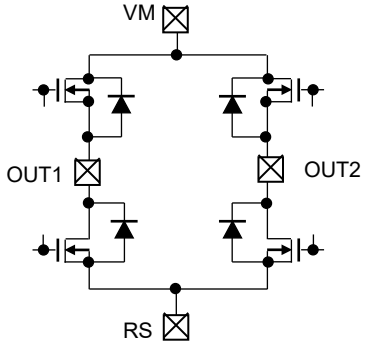

The equivalent circuit may be omitted or simplified for explanatory purposes.

Downloaded from Arrow.com.

Functional Description

Input and output function

IN1	IN2	OUT1	OUT2	Mode
L	L	OFF (Hi-Z)	OFF (Hi-Z)	Stop
				Standby mode after tstby
H	L	H	L	Forward
L	H	L	H	Reverse
H	H	L	L	Brake

Current path: Forward rotation (OUT1 to OUT2), Reverse rotation (OUT2 to OUT1)

Standby mode

When both IN1 and IN2 pins are set to L for tstby (1 ms (typ.)), the operation mode translates to the standby mode.

In standby mode, when IN1 or IN2 is set to H, the mode returns from the standby mode, and enters to the operation mode.
Maximum 30 μs is required for the return time from the standby release.
The OUT1 and OUT2 outputs operate after 30 μs (max) from the standby release.

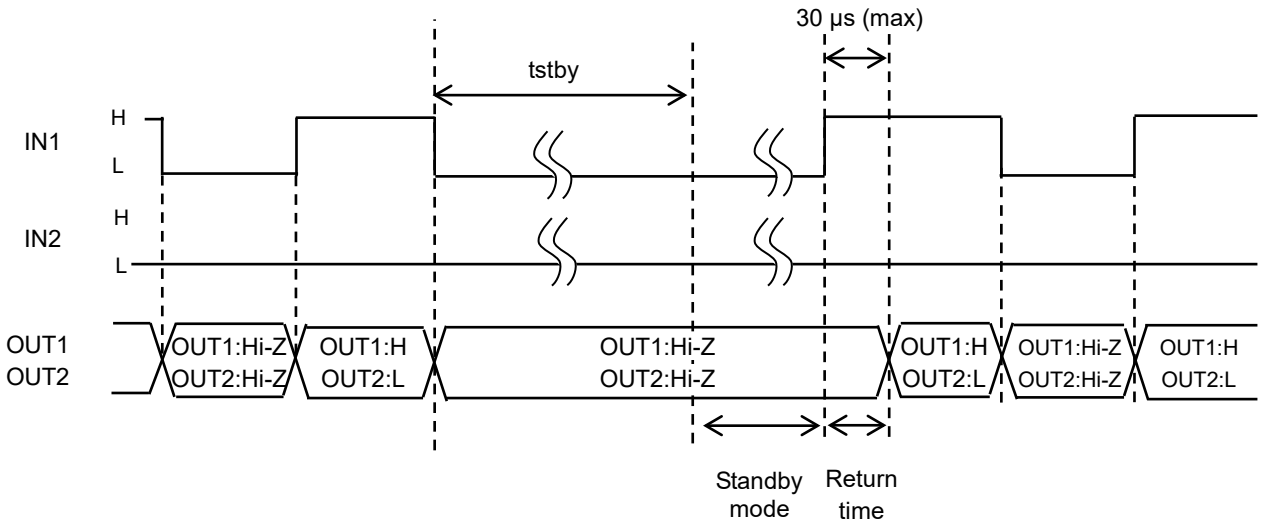

Downloaded from Arrow.com.

Constant current PWM blanking time

In TB67H451AFNG, the following blanking time is set to prevent a spike current and external noise which are generated during driving a motor.

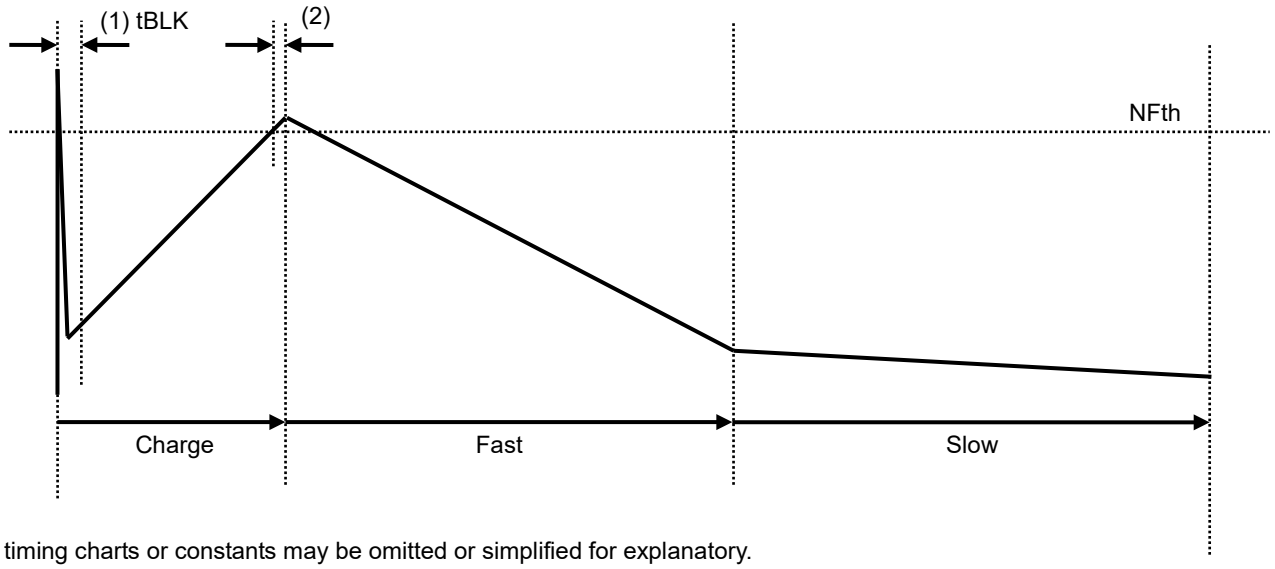

The timing charts or constants may be omitted or simplified for explanatory.

tBLK (For preventing incorrect detection of a spike current at changing from Decay to Charge): 3.6 μs (typ.): (1)

The blanking time, 400 ns (typ.) is also set for preventing an incorrect detection around setting current value (NFth).: (2)

* The time widths shown in the above figure are the design values, and the values are not guaranteed.

Blanking time between Input signal and tBLK

The tBLK is intended to avoid inrush current detection. The TB67H451AFNG not only can be controlled by constant current PWM, but also by direct PWM; with IN control signals. Therefore, the tBLK is set at each IN switch timing; shown with gray in the timing chart below.

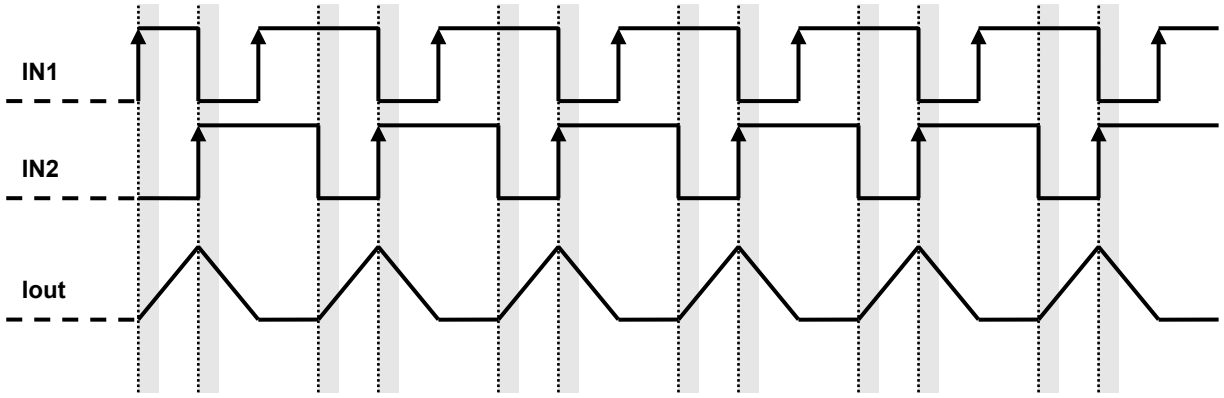

Timing charts may be simplified for explanatory purposes.

Downloaded from Arrow.com.

Motor control (Constant current control)

Current waveform in Mixed Decay Mode and the setting

In case of constant current control, the OFF time (toff) which determines the current ripple (pulsating) is fixed to 25 μs (typ.), and the rate of Mixed Decay Mode is 50% in Fast Mode, and 50% in Slow mode.

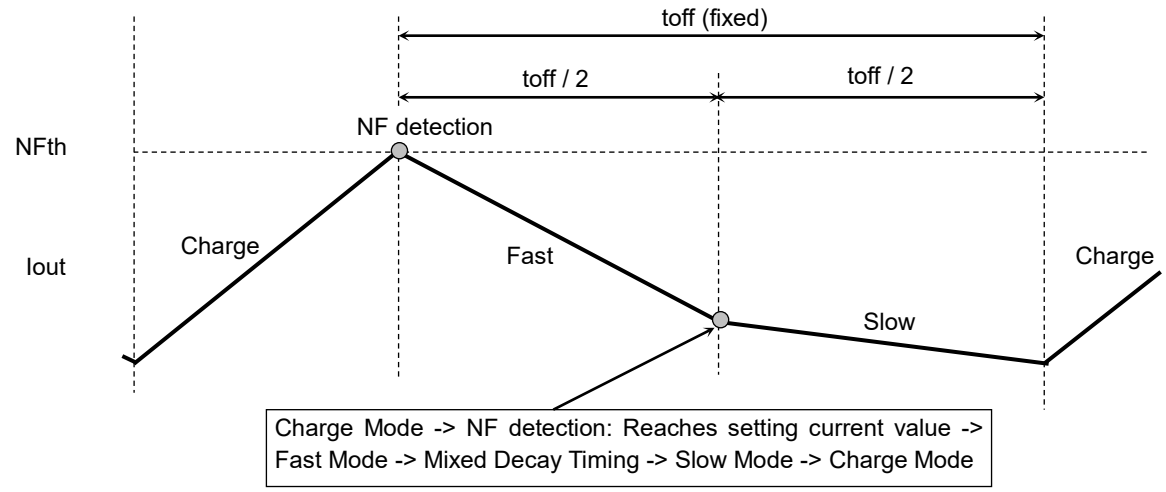

If the output current is zero-detected during Fast mode, the output becomes High impedance.

Waveform in Mixed Decay Mode (Current waveform)

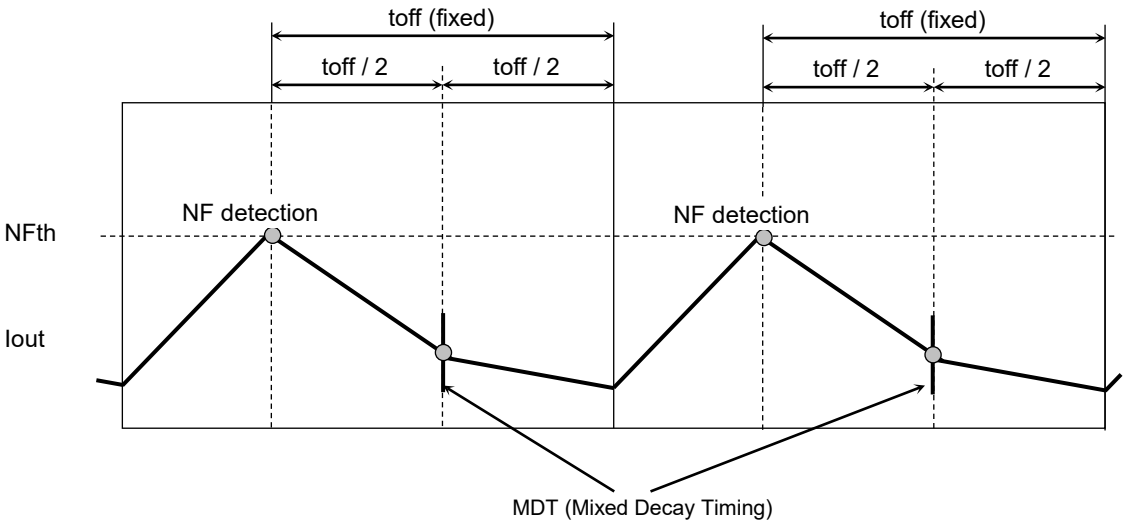

Timing charts may be simplified for explanatory purposes.

Downloaded from Arrow.com.

Operation Mode of Output Transistor

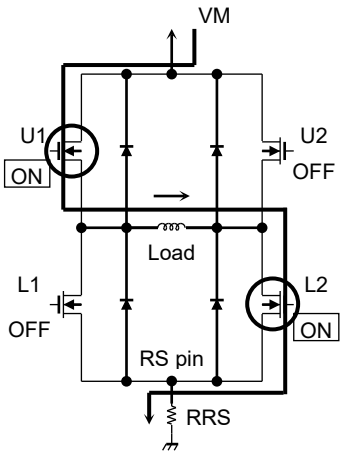

Charge mode
A current flows into the motor coil.

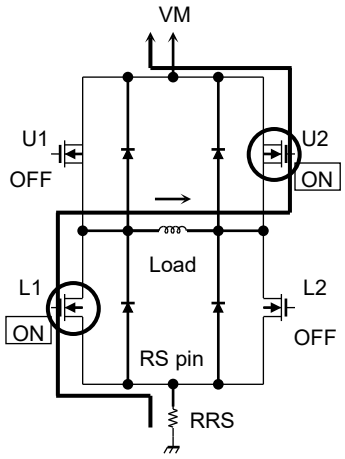

Fast mode
The energy of the motor coil is fed back to the power

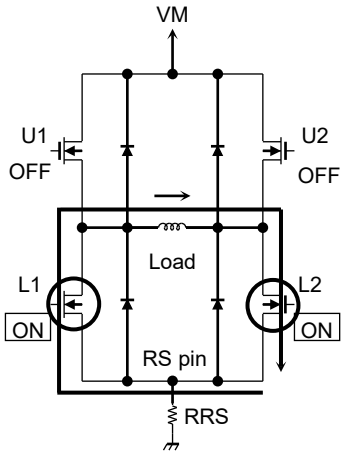

Slow mode
A current circulates around the motor coil and this IC.

Operation Function of Output Transistor

Mode	U1	U2	L1	L2
Charge	ON	OFF	OFF	ON
Fast	OFF	ON	ON	OFF
Slow	OFF	OFF	ON	ON

Note: The parameters shown in the table above are examples when the current flows in the directions shown in the figures above. For the current flowing in the reverse direction, the parameters change as shown in the table below.

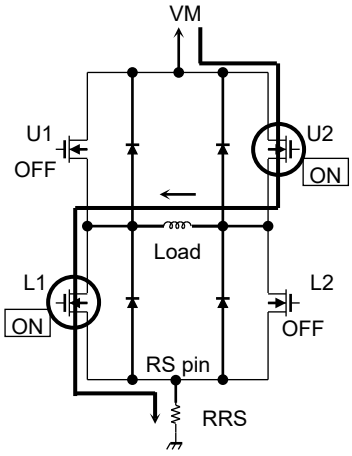

Charge mode
A current flows into the motor coil.

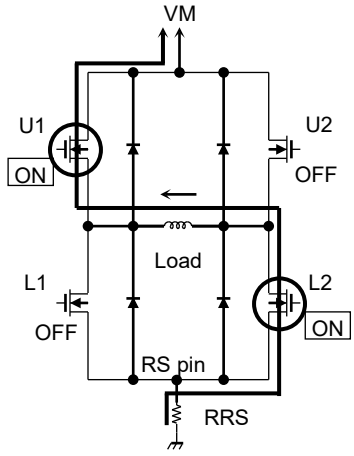

Fast mode
The energy of the motor coil is fed back to the power

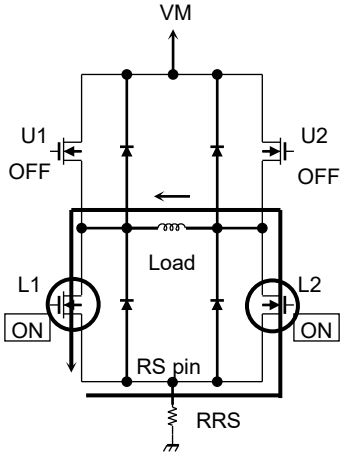

Slow mode
A current circulates around the motor coil and this IC.

Mode	U1	U2	L1	L2
Charge	OFF	ON	ON	OFF
Fast	ON	OFF	OFF	ON
Slow	OFF	OFF	ON	ON

This IC controls the motor current to be constant by 3 modes listed above.
The equivalent circuit diagrams may be simplified or some parts of them may be omitted for explanatory purposes.

Note: In the timing of an output switching, the time to prevent a through current is predefined (200 ns to 300 ns (design value)).

Downloaded from Arrow.com.

Calculation of Predefined Output Current

This IC controls a motor operation by PWM constant current control. The peak current value (setting current value) can be determined by settings of the current-sensing resistor (RRS) and the reference voltage (Vref).

$$Iout\ (max) = Vref\ (gain) \times \frac{Vref\ (V)}{RRS\ (\Omega)}$$

Vref (gain): The Vref decay rate is 1 / 10.0 (typ.).

Example:

When Vref is 3.0 V and RRS is 0.51 Ω, the motor constant current (Peak current) is calculated as:

Iout = 3.0 V / 10.0 / 0.51 Ω= 0.59 A

If the constant current control function is disabled, the RS pin should be connected to GND, and the voltage (1 to 5 V) is input to VREF pin.

Downloaded from Arrow.com.

Absolute Maximum Ratings (Ta = 25°C)

Characteristics	Symbol	Rating	Unit	Remarks
Motor power supply (non active)	VM	50	V	Standby mode
Motor power supply (active)		-0.4 to 44	V	Operation mode
Motor output voltage	Vout	50	V	—
Motor output current	Iout	3.5	A	(Note 1)
Logic input pin voltage	VIN(H)	6.0	V	—
	VIN(L)	-0.4	V	—
VREF pin voltage	Vref	0 to 5.5	V	—
Power dissipation	P_D	2.85	W	(Note 2)
Operating temperature	Topr	-40 to 85	°C	—
Storage temperature	Tstg	-55 to 150	°C	—
Junction temperature	Tj	150	°C	—

Note 1: The maximum current value in normal operation should be used at 70% or less (Iout ≤ 2.45 A) of the absolute maximum ratings after thermal calculation. The maximum output current may be further limited in view of thermal considerations, depending on ambient temperature and board conditions.

Note 2: On PCB (JEDEC 4 layers). When the ambient temperature exceeds above Ta =25°C, derate the power dissipation by 22.8 mW/°C.

Ta : Ambient temperature

Topr : Ambient temperature while the device is active.

Tj : Junction temperature while the device is active. The maximum junction temperature is limited by thermalshutdown (TSD) circuitry. It is advisable to keep the maximum current below a certain level so that the maximum junction temperature, Tj (max), will not exceed 120°C.

Caution) Absolute maximum ratings

The absolute maximum ratings of a semiconductor device are a set of ratings that must not be exceeded, even for a moment. Do not exceed any of these ratings. Exceeding the rating (s) may cause device breakdown, damage or deterioration, and may result in injury by explosion or combustion. The value of even one parameter of the absolute maximum ratings should not be exceeded under any circumstances. The TB67H451AFNG does not have overvoltage detection circuit. Therefore, the device is damaged if a voltage exceeding its rated maximum is applied. All voltage ratings, including supply voltages, must always be followed. The other notes and considerations described later should also be referred to.

Operating Range (Ta=-40 to 85°C)

Characteristics	Symbol	Min	Typ.	Max	Unit	Remarks
Motor power supply voltage	VM	4.5	24	44	V	—
Motor output current	Iout	—	1.5	3.0	A	—
Input range of control logic frequency	fLOGIC	—	—	400	kHz	IN1, IN2
Input range of Vref voltage	Vref	0	2.0	4.0	V	Constant current drive

Note: The actual maximum current may be limited by the operating environment (operating conditions such operating duration, or by the surrounding temperature or board heat dissipation). Determine a realistic maximum current by calculating the heat generated under the operating environment.

Downloaded from Arrow.com.

Electrical Characteristics 1 (Ta=25°C, VM=24 V unless otherwise specified)

Characteristics		Symbol	Test conditions	Min	Typ.	Max	Unit
Logic input pin Input voltage	HIGH	VIN(H)	Logic input pins	2.0	—	5.5	V
	LOW	VIN(L)	Logic input pins	0	—	0.8	V
Input hysteresis		VIN(HYS)	Logic input pins (Note 1)	100	—	300	mV
Logic input pin Input current	HIGH	IIN(H)	Test logic input pins: 3.3 V	—	33	55	μA
	LOW	IIN(L)	Test logic input pins: 0 V	—	—	1	μA
Current consumption		IM1	Output: Open Standby mode (IN1/IN2=Low)	—	—	1	μA
		IM2	Output: Open Brake mode (IN1/IN2=High)	—	3	4	mA
		IM3	Output: Open fPWM=30 kHz	—	3.5	5	mA
Motor output Leakage current	High	IOH	VM=50 V, Vout=0 V Standby mode (IN1/IN2=Low)	—	—	1	μA
	Low	IOL	VM=Vout=50 V Standby mode (IN1/IN2=Low)	-1	—	—	μA
Output setting current accuracy		ΔIout	Iout=1.5 A	-5	0	5	%
RS pin current		IRS	VRS=0 V, VM=24 V Standby mode (IN1/IN2=Low)	0	—	1	μA
Output transistor On-resistance between drain and source (High side + low side)		Ron(H+L)	Tj=25°C, Forward direction (High side + low side) Iout=1.5 A	—	0.6	0.8	Ω

Note 1: VIN (HYS) is defined as the difference between VIN (H) and VIN (L). VIN (H) is the voltage when the voltage (VIN) to the input pins (IN1 and IN2) is raised and the output pins (OUT1 and OUT2) change from H to L. VIN (L) is the voltage when the VIN (H) is lowered and the output pins (OUT1 and OUT2) change from L to H.
VIN (HYS) = VIN (H) – VIN (L)

Note: The internal circuits are designed to avoid EMF or leakage current; when the logic signal is applied while the VM is not supplied. Please consider the control signal timing before supplying the VM.

Downloaded from Arrow.com.

Electrical Characteristics 2 (Ta =25°C, VM = 24 V, unless otherwise specified)

Characteristics	Symbol	Test conditions	Min	Typ.	Max	Unit
VREF pin input current	Iref	Vref=2.0 V	—	0	1	μA
Vref attenuation ratio	Vref(gain)	Vref=2.0 V	1/10.4	1/10	1/9.6	—
Thermal shutdown (TSD) circuit operating temperature (Note 1)	TjTSD	—	150	160	175	°C
Thermal shutdown (TSD) hysteresis	TjTSDhys	—	—	30	—	°C
UVLO voltage (Note 2)	VUVLO	At rising VM	3.8	4.0	4.2	V
UVLO hysteresis voltage	Vhys_uvlo	—	—	200	—	mV
Over current detection (ISD) circuit operating current (Note 3)	ISD	—	4.1	4.9	5.7	A

Note 1: Thermal shutdown (TSD) *auto return

When the junction temperature of the IC reaches the TSD threshold, the TSD circuit is triggered; the internal reset circuit then turns off the output transistors. In order to avoid malfunction by switching etc., detection mask time is prepared inside IC. Since the operating temperature of TSD circuit has a hysteresis width, the IC returns automatically when the junction temperature is lowered to the temperature to return.
The TSD circuit is a backup function to detect a thermal error, therefore, is not recommended to be used aggressively.

Note 2: Under voltage lockout (UVLO)

When the supply voltage to VM pin is 3.8V or less, the internal circuit is triggered; the internal reset circuit then turns off the output transistors. Once the UVLO is triggered, it can be cleared by reasserting the VM supply voltage to 4.0V or more (typ.)

Note 3: Over current detection (ISD) *auto return

When the output current reaches the threshold, the ISD circuit is triggered; the internal reset circuit then turns off the output transistors. In order to avoid malfunction by switching etc., detection mask time is prepared inside IC. The IC operation recovers automatically after specified recovery time passes.
Additionally, the IC has a circuit as a short circuit detection of output pins (OUT1 and OUT2) which are adjacent to RS pin, if the voltage more than the threshold is applied to RS pin, the circuit turns off the output transistors.

Downloaded from Arrow.com.

Back-EMF

While a motor is rotating, there is a timing at which power is fed back to the power supply. At that timing, the motor current recirculates back to the power supply due to the effect of the motor back-EMF.
If the power supply does not have enough sink capability, the power supply and output pins of the device might rise above the rated voltages. The magnitude of the motor back-EMF varies with usage conditions and motor characteristics. It must be fully verified that there is no risk that the TB67H451AFNG or other components may be damaged or failed due to the motor back-EMF.

Cautions on Overcurrent Shutdown (ISD) and Thermal Shutdown (TSD)

The ISD and TSD circuits are only intended to provide temporary protection against irregular conditions such as an output short-circuit; they do not necessarily guarantee the complete IC safety.
If the device is used beyond the specified operating ranges, these circuits may not operate properly: then the device may be damaged due to an output short-circuit.
The ISD circuit is only intended to provide a temporary protection against an output short-circuit. If such a condition persists for a long time, the device may be damaged due to overstress. Overcurrent conditions must be removed immediately by external hardware.

IC Mounting

Do not insert devices incorrectly or in the wrong orientation. Otherwise, it may cause breakdown, damage and/or deterioration of the device.

Downloaded from Arrow.com.

AC Electrical Characteristics (Ta = 25°C, VM = 24 V, output load condition 6.8 mH/5.7 Ω, unless otherwise specified)

Characteristics	Symbol	Test condition	Min	Typ.	Max	Unit
Minimum input pulse width of IN1 and IN2	tw(H)	—	500	—	—	ns
	tw(L)	—	500	—	—	
Output transistor switching characteristics	tr	—	30	60	120	ns
	tf	—	40	80	160	
	tpLH	IN1 and IN2 - OUT	—	500	—	
	tpHL	IN1 and IN2 - OUT	—	500	—	
Blanking time of noise rejection	tBLK	—	—	3.6	—	μs
Fixed OFF time	toff	—	19	25	36	μs
Time to standby	tstby	IN1=IN2=Low	0.7	1	1.5	ms
Standby return time		—	—	—	30	μs
Mask time of over current detection (ISD)	tISD(mask)	—	—	1.5	—	μs
OFF time of over current detection (ISD)	tISD(off)	—	—	3	—	ms
Mask time of thermal shutdown (TSD)	tTSD(mask)	—	2.0	5.0	8.0	μs

Timing chart of AC characteristics

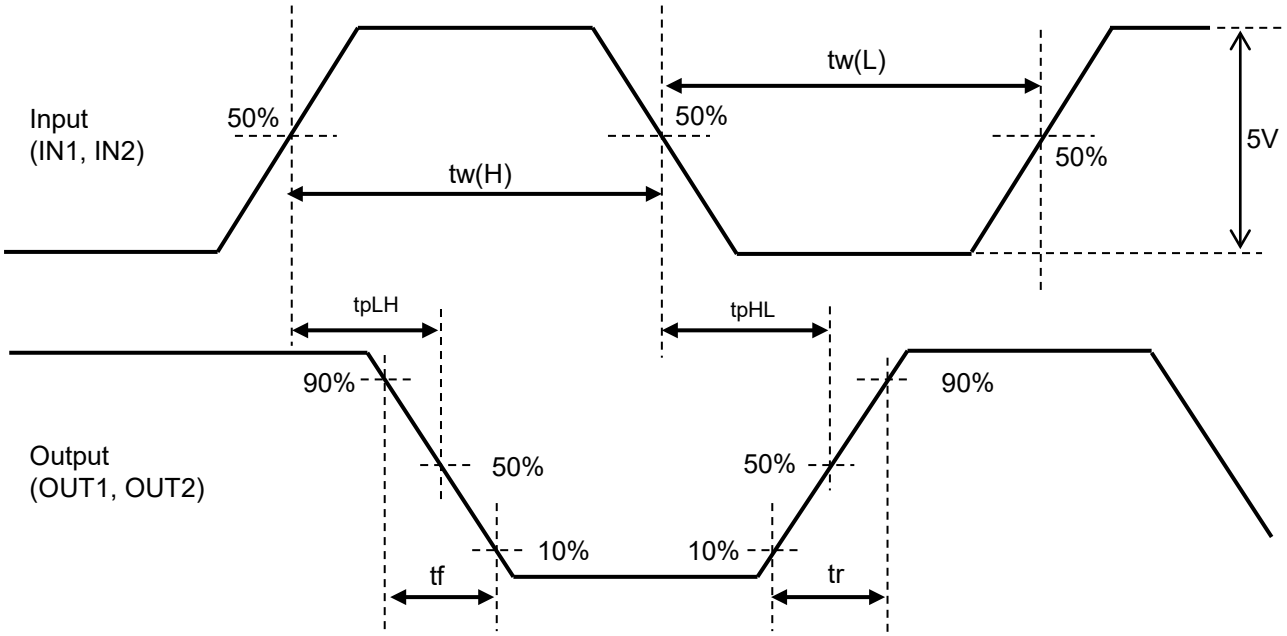

Timing charts may be simplified for explanatory purposes.

Downloaded from Arrow.com.

(Reference) Relation between Power dissipation and Ambient Temperature

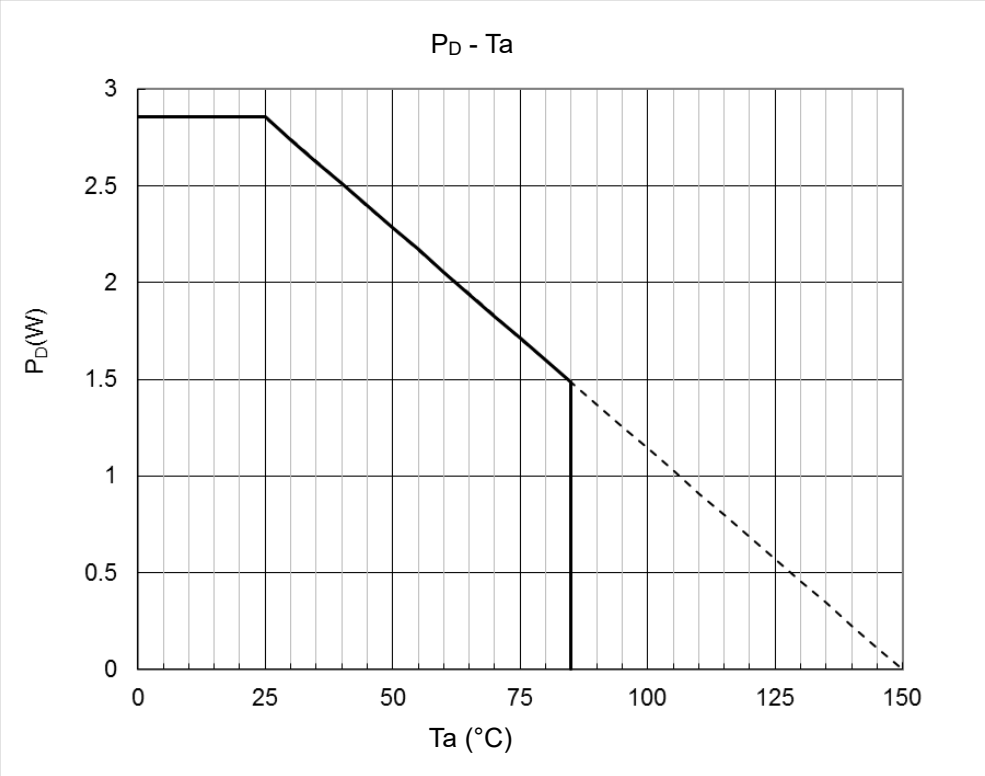

When mounted on the board (JEDEC 4 layers)

This value is dependent on a substrate pattern and mounting conditions. Moreover, when ambient temperature is high, permissible power consumption becomes small.

Downloaded from Arrow.com.

Package Dimensions

P-HSOP8-0405-1.27-002

(Unit: mm)

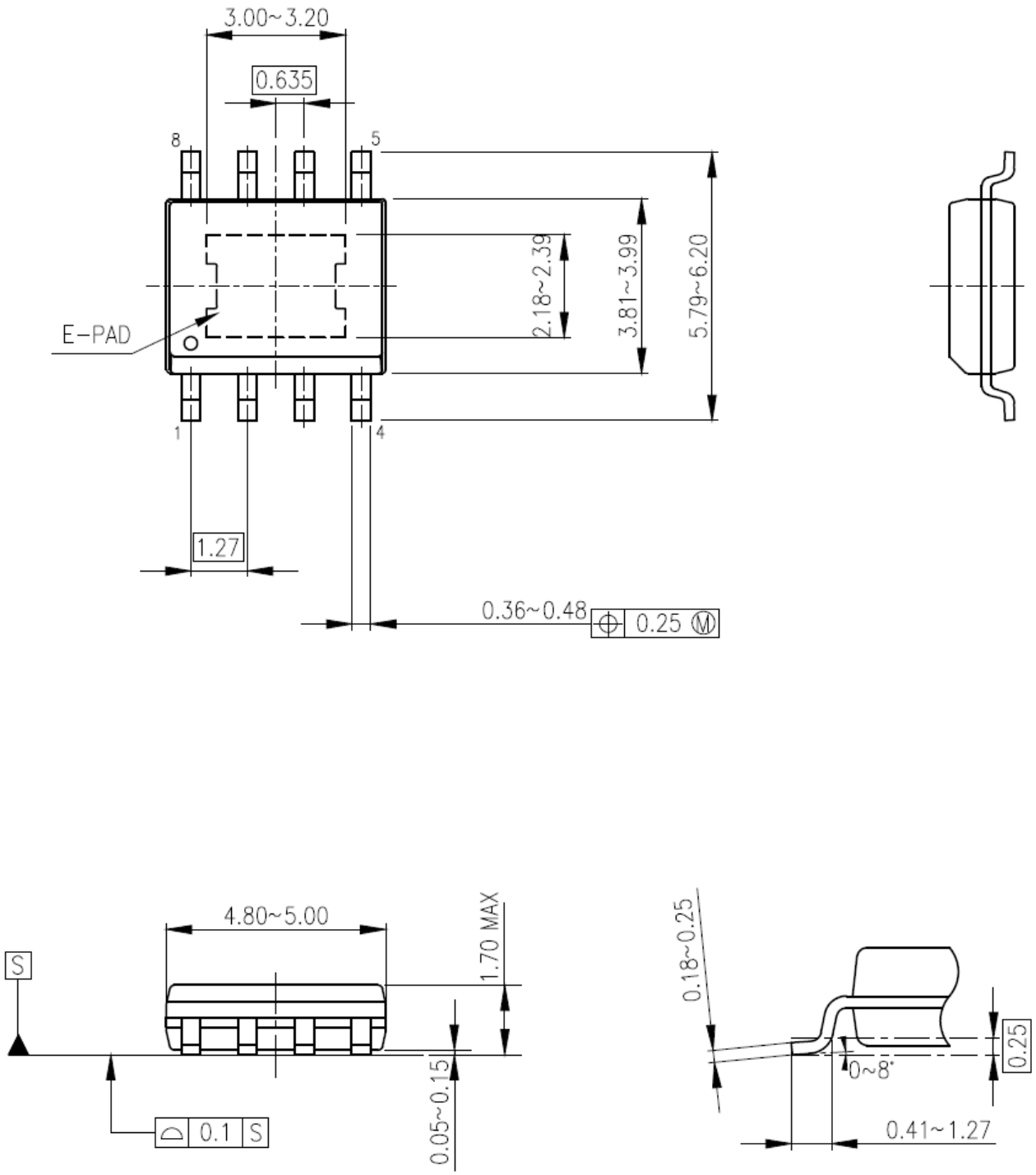

Weight 0.075 g (typ.)

Downloaded from Arrow.com.

Notes on Contents

(1) Block Diagrams
Some of the functional blocks, circuits, or constants in the block diagram may be omitted or simplified for explanatory purposes.

(2) Equivalent Circuits
The equivalent circuit diagrams may be simplified or some parts of them may be omitted for explanatory purposes.

(3) Timing Charts
Timing charts may be simplified for explanatory purposes.

(4) Application Circuits
The application circuits shown in this document are provided for reference purposes only. Thorough evaluation is required, especially at the mass production design stage. Providing these application circuit examples does not grant a license for industrial property rights.

IC Usage Considerations

Notes on handling of ICs

[1] The absolute maximum ratings of a semiconductor device are a set of ratings that must not be exceeded, even for a moment. Do not exceed any of these ratings.
Exceeding the rating(s) may cause the device breakdown, damage or deterioration, and may result injury by explosion or combustion.

[2] Use an appropriate power supply fuse to ensure that a large current does not continuously flow in case of over current and/or IC failure. The IC will fully break down when used under conditions that exceed its absolute maximum ratings, when the wiring is routed improperly or when an abnormal pulse noise occurs from the wiring or load, causing a large current to continuously flow and the breakdown can lead smoke or ignition. To minimize the effects of the flow of a large current in case of breakdown, appropriate settings, such as fuse capacity, fusing time and insertion circuit location, are required.

[3] If your design includes an inductive load such as a motor coil, incorporate a protection circuit into the design to prevent device malfunction or breakdown caused by the current resulting from the inrush current at power ON or the negative current resulting from the back electromotive force at power OFF. IC breakdown may cause injury, smoke or ignition.
Use a stable power supply with ICs with built-in protection functions. If the power supply is unstable, the protection function may not operate, causing IC breakdown. IC breakdown may cause injury, smoke or ignition.

[4] Do not insert devices in the wrong orientation or incorrectly.
Make sure that the positive and negative terminals of power supplies are connected properly.
Otherwise, the current or power consumption may exceed the absolute maximum rating, and exceeding the rating(s) may cause the device breakdown, damage or deterioration, and may result injury by explosion or combustion.
In addition, do not use any device that is applied the current with inserting in the wrong orientation or incorrectly even just one time.

[5] Carefully select external components (such as inputs and negative feedback capacitors) and load components (such as speakers), for example, power amp and regulator.
If there is a large amount of leakage current such as input or negative feedback condenser, the IC output DC voltage will increase. If this output voltage is connected to a speaker with low input withstand voltage, overcurrent or IC failure can cause smoke or ignition. (The over current can cause smoke or ignition from the IC itself.) In particular, please pay attention when using a Bridge Tied Load (BTL) connection type IC that inputs output DC voltage to a speaker directly.

Downloaded from Arrow.com.

Points to remember on handling of ICs

(1) Over current Protection Circuit

Over current protection circuits (referred to as current limiter circuits) do not necessarily protect ICs under all circumstances. If the over current protection circuits operate against the over current, clear the over current status immediately.

Depending on the method of use and usage conditions, such as exceeding absolute maximum ratings can cause the over current protection circuit to not operate properly or IC breakdown before operation. In addition, depending on the method of use and usage conditions, if over current continues to flow for a long time after operation, the IC may generate heat resulting in breakdown.

(2) Thermal Shutdown Circuit

Thermal shutdown circuits do not necessarily protect ICs under all circumstances. If the thermal shutdown circuits operate against the over temperature, clear the heat generation status immediately.

Depending on the method of use and usage conditions, such as exceeding absolute maximum ratings can cause the thermal shutdown circuit to not operate properly or IC breakdown before operation.

(3) Heat Radiation Design

In using an IC with large current flow such as power amp, regulator or driver, please design the device so that heat is appropriately radiated, not to exceed the specified junction temperature (Tj) at any time and condition. These ICs generate heat even during normal use. An inadequate IC heat radiation design can lead to decrease in IC life, deterioration of IC characteristics or IC breakdown. In addition, please design the device taking into considerate the effect of IC heat radiation with peripheral components.

(4) Back-EMF

When a motor reverses the rotation direction, stops or slows down abruptly, a current flow back to the motor's power supply due to the effect of back-EMF. If the current sink capability of the power supply is small, the device's motor power supply and output pins might be exposed to conditions beyond absolute maximum ratings. To avoid this problem, take the effect of back-EMF into consideration in system design.

Downloaded from Arrow.com.

RESTRICTIONS ON PRODUCT USE

Toshiba Corporation and its subsidiaries and affiliates are collectively referred to as “TOSHIBA”.
Hardware, software and systems described in this document are collectively referred to as “Product”.

- TOSHIBA reserves the right to make changes to the information in this document and related Product without notice.
- This document and any information herein may not be reproduced without prior written permission from TOSHIBA. Even with TOSHIBA's written permission, reproduction is permissible only if reproduction is without alteration/omission.
- Though TOSHIBA works continually to improve Product's quality and reliability, Product can malfunction or fail. Customers are responsible for complying with safety standards and for providing adequate designs and safeguards for their hardware, software and systems which minimize risk and avoid situations in which a malfunction or failure of Product could cause loss of human life, bodily injury or damage to property, including data loss or corruption. Before customers use the Product, create designs including the Product, or incorporate the Product into their own applications, customers must also refer to and comply with (a) the latest versions of all relevant TOSHIBA information, including without limitation, this document, the specifications, the data sheets and application notes for Product and the precautions and conditions set forth in the "TOSHIBA Semiconductor Reliability Handbook" and (b) the instructions for the application with which the Product will be used with or for. Customers are solely responsible for all aspects of their own product design or applications, including but not limited to (a) determining the appropriateness of the use of this Product in such design or applications; (b) evaluating and determining the applicability of any information contained in this document, or in charts, diagrams, programs, algorithms, sample application circuits, or any other referenced documents; and (c) validating all operating parameters for such designs and applications. **TOSHIBA ASSUMES NO LIABILITY FOR CUSTOMERS' PRODUCT DESIGN OR APPLICATIONS.**
- **PRODUCT IS NEITHER INTENDED NOR WARRANTED FOR USE IN EQUIPMENTS OR SYSTEMS THAT REQUIRE EXTRAORDINARILY HIGH LEVELS OF QUALITY AND/OR RELIABILITY, AND/OR A MALFUNCTION OR FAILURE OF WHICH MAY CAUSE LOSS OF HUMAN LIFE, BODILY INJURY, SERIOUS PROPERTY DAMAGE AND/OR SERIOUS PUBLIC IMPACT ("UNINTENDED USE").** Except for specific applications as expressly stated in this document, Unintended Use includes, without limitation, equipment used in nuclear facilities, equipment used in the aerospace industry, Class 3 medical devices, equipment used for automobiles, and military vehicles and munitions. **IF YOU USE PRODUCT FOR UNINTENDED USE, TOSHIBA ASSUMES NO LIABILITY FOR PRODUCT.** For details, please contact your TOSHIBA sales representative or contact us via our website.
- Do not disassemble, analyze, reverse-engineer, alter, modify, translate or copy Product, whether in whole or in part.
- Product shall not be used for or incorporated into any products or systems whose manufacture, use, or sale is prohibited under any applicable laws or regulations.
- The information contained herein is presented only as guidance for Product use. No responsibility is assumed by TOSHIBA for any infringement of patents or any other intellectual property rights of third parties that may result from the use of Product. No license to any intellectual property right is granted by this document, whether express or implied, by estoppel or otherwise.
- **ABSENT A WRITTEN SIGNED AGREEMENT, EXCEPT AS PROVIDED IN THE RELEVANT TERMS AND CONDITIONS OF SALE FOR PRODUCT, AND TO THE MAXIMUM EXTENT ALLOWABLE BY LAW, TOSHIBA (1) ASSUMES NO LIABILITY WHATSOEVER, INCLUDING WITHOUT LIMITATION, INDIRECT, CONSEQUENTIAL, SPECIAL, OR INCIDENTAL DAMAGES OR LOSS, INCLUDING WITHOUT LIMITATION, LOSS OF PROFITS, LOSS OF OPPORTUNITIES, BUSINESS INTERRUPTION AND LOSS OF DATA, AND (2) DISCLAIMS ANY AND ALL EXPRESS OR IMPLIED WARRANTIES AND CONDITIONS RELATED TO SALE, USE OF PRODUCT, OR INFORMATION, INCLUDING WARRANTIES OR CONDITIONS OF MERCHANTABILITY, FITNESS FOR A PARTICULAR PURPOSE, ACCURACY OF INFORMATION, OR NONINFRINGEMENT.**
- Do not use or otherwise make available Product or related software or technology for any military purposes, including without limitation, for the design, development, use, stockpiling or manufacturing of nuclear, chemical, or biological weapons or missile technology products (mass destruction weapons). Product and related software and technology may be controlled under the applicable export laws and regulations including, without limitation, the Japanese Foreign Exchange and Foreign Trade Law and the U.S. Export Administration Regulations. Export and re-export of Product or related software or technology are strictly prohibited except in compliance with all applicable export laws and regulations.
- Please contact your TOSHIBA sales representative for details as to environmental matters such as the RoHS compatibility of Product. Please use Product in compliance with all applicable laws and regulations that regulate the inclusion or use of controlled substances, including without limitation, the EU RoHS Directive. **TOSHIBA ASSUMES NO LIABILITY FOR DAMAGES OR LOSSES OCCURRING AS A RESULT OF NONCOMPLIANCE WITH APPLICABLE LAWS AND REGULATIONS.**

Downloaded from Arrow.com.