finder
SWITCH TO THE FUTURE

Electronic Relays and Actuators: Multi and Single Function

- Call and reset switches for bathrooms
- Bathroom lighting control
- Bedroom light control
- Living room light control
- Office lighting control
- Remote climate control

13
SERIES

Downloaded from Arrow.com.

Prices, features, specifications, capabilities, appearance and availability of our products and services are subject to change without notice.
FINDER assumes no responsibility for the presence of possible errors or insufficient information in this document.
In case of discrepancies between the printed and online versions, the latter prevails.

Downloaded from Arrow.com.

13.81 - Quiet electronic step relay - Rail mount - 1 Pole

13.91 - Quiet electronic step relay and timing step relay Switch box mount - 1 Pole

- Fixed time (10 minutes) timing function selectable (13.91)
- Use with 3 or 4 wire connection, with automatic recognition by the relay
- Control input can be continuously applied
- Longer mechanical and electrical life, and much quieter than electromechanical step relays
- "Zero crossing" load switching
- Can be mounted behind blanking plates, as widely used in residential wiring systems such as; BTicino: Axolute, Matix, Living and Magic, Gewiss: GW24, Vimar: Plana and Idea … (13.91)
- 35 mm rail (EN 60715) mount (13.81)
- Cadmium free contact material

13.81/91
Screw terminals

For outline drawing see page 19, 20

	13.81	13.91
	• 1 NO (SPST-NO) • 35 mm rail (EN 60715) mount • 17.5 mm wide	• 1 NO (SPST-NO) • Step relay and timing step relay (10 minutes) • For mounting within residential switch boxes
Contact specification		
Contact configuration	1 NO (SPST-NO)	1 NO (SPST-NO)
Rated current/Maximum peak current A	16/30 (120 - 5 ms)	10/20 (80 - 5 ms)
Rated voltage/ Maximum switching voltage V AC	230/—	230/—
Rated load AC1 VA	3700	2300
Rated load AC15 (230 V AC) VA	750	450
Nominal lamp rating:		
230 V incandescent/halogen W	3000	1000
fluorescent tubes with electronic ballast W	1500	500
fluorescent tubes with electromagnetic ballast W	1000	350
CFL W	600	300
230 V LED W	600	300
LV halogen or LED with electronic ballast W	600	300
LV halogen or LED with electromagnetic ballast W	1500	500
Minimum switching load mW (V/mA)	1000 (10/10)	1000 (10/10)
Standard contact material	$AgSnO_2$	$AgSnO_2$
Supply specification		
Nominal voltage (U_N) V AC (50/60 Hz)	230	230
V DC	—	—
Rated power VA (50 Hz)/W	3/1.2	2/1
Operating range AC (50 Hz)	$(0.8…1.1)U_N$	$(0.8…1.1)U_N$
DC	—	—
Technical data		
Electrical life at rated load in AC1 cycles	$100 \cdot 10^3$	$100 \cdot 10^3$
Maximum impulse duration	continuous	continuous
Dielectric strength between: open contacts V AC	1000	1000
supply - contacts V AC	—	—
Ambient temperature range °C	−10…+60	−10…+50
Protection category	IP 20	IP 20
Approvals (according to type)	CE UK CA EAC	CE UK CA EAC

Downloaded from Arrow.com.

13 SERIES
Electronic step/monostable relays 16 A

13.01 - Electronic step
Bistable or monostable relay

13.61 - Electronic step
Multifunction step relay
Reset feature (13.61.8.230.0000)
Set and Reset feature (13.61.0.024.0000)

- Control input can be continuously applied
- Longer mechanical and electrical life, and much quieter than electromechanical step relays
- 35 mm rail (EN 60715) mount
- Cadmium free contact material
- Selectable Step or Monostable operation (13.01)
- Suitable for SELV applications and available also for supply 12 and 24 V AC/DC (13.01)
- Multifunction: Step, Timing step, Monostable, Light ON (13.61)
- 12…24 V AC/DC and 110…240 V AC supply versions (13.61)
- Reset feature, for centralized off command (13.61.8.230.000x)
- Set feature, for centralized on command Reset feature, for centralized off command (13.61.0.024.0000)
- "Zero-crossing" load switching (13.61)

13.01/61
Screw terminals

* With DC Bistable function: (12…13.2)V DC

For outline drawing see page 19

	13.01	13.61.0.024.0000	13.61.8.230.000x
	• 1 CO (SPDT) • Step or monostable relay • According to EN 60601-1 2 x MOOP • 35 mm rail (EN 60715) mount • 35 mm wide	• 1 CO (SPDT) • Reset feature, for centralized off command • Set feature, for centralized on command • Multifunction: - step relay - timing step relay (30s…20min) - monostable relay - light on • 35 mm rail (EN 60715) mount • 17.5 mm wide	• 1 NO (SPST-NO) • Reset feature, for centralized off command: - reset 3s: Type 13.61-0000 - reset 1s: Type 13.61-0001 • Multifunction: - step relay - timing step relay (30s…20min) - monostable relay - light on • 35 mm rail (EN 60715) mount • 17.5 mm wide
Contact specification			
Contact configuration	1 CO (SPDT)	1 CO (SPDT)	1 NO (SPST-NO)
Rated current/Maximum peak current A	16/30 (120 A - 5 ms)	16/30 (120 A - 5 ms)	16/30 (120 A - 5 ms)
Rated voltage/ Maximum switching voltage V AC	250/400	250/400	250/400
Rated load AC1 VA	4000	4000	4000
Rated load AC15 (230 V AC) VA	750	750	750
Nominal lamp rating:			
230 V incandescent/halogen W	2000	2000	3000
fluorescent tubes with electronic ballast W	1000	1000	1500
fluorescent tubes with electromagnetic ballast W	750	750	1000
CFL W	400	400	600
230 V LED W	400	400	600
LV halogen or LED with electronic ballast W	400	400	600
LV halogen or LED with electromagnetic ballast W	800	800	1500
Minimum switching load mW (V/mA)	1000 (10/10)	1000 (10/10)	1000 (10/10)
Standard contact material	$AgSnO_2$	$AgSnO_2$	$AgSnO_2$
Supply specification			
Nominal voltage (U_N) V AC (50/60 Hz)	110…125 / 230…240	—	110…240
V DC/AC (50/60 Hz)	12 / 24	12…24	—
Rated power AC/DC VA (50/60 Hz)/W	2.5/2.5	1/0.5	3.2/1
Operating range V AC (50/60 Hz)	90…130 / 184…253	—	90…264
V DC/AC (50/60 Hz)	10.8*…13.2 / 20.6…33.6	10.2…26.4	—
Technical data			
Electrical life at rated load in AC1 cycles	$100 \cdot 10^3$	$100 \cdot 10^3$	$100 \cdot 10^3$
Maximum impulse duration	continuous	continuous	continuous
Dielectric strength between: open contacts V AC	1000	1000	1000
supply - contacts V AC	4000	2000	2000
Ambient temperature range °C	–10…+60	–10…+60	–10…+60
Protection category	IP 20	IP 20	IP 20
Approvals (according to type)	CE UKCA EAC		

K

IV-2024, www.findernet.com

Downloaded from Arrow.com.

13.11 - Call & Reset Relay - Rail mount - 1 Pole

13.12 - Call & Reset Relay - Rail mount - 2 Pole

13.31 - Electromechanical monostable relay Switch box mount - 1 Pole

- Call relay with reset command suitable for residential and commercial applications: public bathroom, hospital, hotel (type 13.11/13.12)
- Can be mounted behind blanking plates, as widely used in residential wiring systems such as; BTicino: Axolute, Matix, Living e Magic, Gewiss: GW24, Vimar: Plana e Idea … (13.31)
- 35 mm rail (EN 60715) or flange mount (13.11 and 13.12)
- Cadmium free contact material

13.11/12/31
Screw terminals

	13.11	13.12	13.31
	• 1 CO (SPDT) • Call relay with reset command • 35 mm rail (EN 60715) mount • 17.5 mm wide	• 1 CO (SPDT) + 1 NO (SPST-NO) • Call relay with reset command • 35 mm rail (EN 60715) mount • 17.5 mm wide	• 1 NO (SPST-NO) • Interposing monostable relay • For mounting within residential switch boxes

* During impulse only.
For outline drawing see page 19

		13.11	13.12	13.31
Contact specification				
Contact configuration		1 CO (SPDT)	1 CO (SPDT) + 1 NO (SPST-NO)	1 NO (SPST-NO)
Rated current/Maximum peak current	A	12/30	8/15	12/20 (80 A - 5 ms)
Rated voltage/ Maximum switching voltage	V AC	250/400	250/400	250/400
Rated load AC1	VA	3000	2000	3000
Rated load AC15 (230 V AC)	VA	750	400	450
Nominal lamp rating:				
230 V incandescent/halogen	W	—	—	800
fluorescent tubes with electronic ballast	W	—	—	400
fluorescent tubes with electromagnetic ballast	W	—	—	300
CFL	W	—	—	200
230 V LED	W	—	—	200
LV halogen or LED with electronic ballast	W	—	—	200
LV halogen or LED with electromagnetic ballast	W	—	—	400
Minimum switching load	mW (V/mA)	500 (5/5)	300 (5/5)	1000 (10/10)
Standard contact material		AgNi	AgNi	$AgSnO_2$
Supply specification				
Nominal voltage (U_N)	V AC (50/60 Hz)	230…240	12 - 24	12 - 230
	V DC	—	12 - 24	24
Rated power AC/DC	VA (50 Hz)/W	1.7/0.7*	3/2.5*	1/0.4
Operating range	AC (50 Hz)	(0.8…1.1)U_N	(0.8…1.1)U_N	(0.8…1.1)U_N
	DC	—	(0.8…1.1)U_N	(0.8…1.1)U_N
Technical data				
Electrical life at rated load in AC1	cycles	$100 \cdot 10^3$	$100 \cdot 10^3$	$70 \cdot 10^3$
Maximum impulse duration		10 s (100 ms minimum)	10 s (100 ms minimum)	continuous
Dielectric strength between: open contacts	V AC	1000	1000	1000
supply - contacts	V AC	2000	2000	2000
Ambient temperature range	°C	–10…+60	–10…+60	–10…+60
Protection category		IP 20	IP 20	IP 20
Approvals (according to type)		CE UK CA EAC		

K

Downloaded from Arrow.com.

13 SERIES
YESLY Electronic Relays and Actuators

finder

Multi and Single function electronic relays with Bluetooth

13.22 - Electronic multifunction relay
2 Pole
- Round wall box (ie: Ø 60 mm) mounting
- 21 available functions (step relays, timer, staircase timer) for lighting and fan motor control

13.72 - Electronic multifunction relay
2 Pole
- Wall mounting, compatible with most popular Italian residential switch boxes: AVE, BTicino, Gewiss, Simon-Urmet, Vimar
- 21 available functions: step relays, timing (1s - 24h), electric shutter, blind or curtain control

13.S2 - Electronic roller shutter actuator
- Round wall box (ie: Ø 60 mm) mounting
- For electric shutter, blind or curtain control

- 2 contacts NO 6 A - 230 V AC independent and programmable channels
- 2 inputs for wired pushbuttons (one input per channel)
- Transmission range: approximately 10 m in free space and without obstacles

13.22/S2/72
Screw terminals

NOTE: with 110…125 V AC supply, the Ratings (AC1, AC15 and lamp loads) must be reduced by 50 % (e.g. 100 W instead of 200 W)

For outline drawing see page 20

NEW **13.22** YESLY

- Offering a variety of ON/OFF functions associated with lighting and fan motor control
- Transmission protocol Bluetooth Low Energy (BLE)
- Safe connection with 128-bit encryption
- App programming with iOS or Android Smartphone: Finder YOU
- Can be managed through standard pushbuttons, BEYON and Type 013.B9 wireless buttons

NEW **13.72** YESLY

- Offering a variety of ON/OFF functions associated with lighting, electric shutters, blinds or curtains
- Transmission protocol Bluetooth Low Energy (BLE)
- Safe connection with 128-bit encryption
- App programming with iOS or Android Smartphone: Finder YOU
- Can be managed through standard pushbuttons, BEYON and Type 013.B9 wireless buttons

NEW **13.S2** YESLY

- Suitable for electric shutters, blind or curtain control
- Transmission protocol Bluetooth Low Energy (BLE)
- Safe connection with 128-bit encryption
- App programming with iOS or Android Smartphone: Finder YOU
- Can be managed through standard pushbuttons, BEYON and Type 013.B9 wireless buttons

Contact specification				
Contact configuration		2 NO (DPST-NO)	2 NO (DPST-NO)	2 NO (DPST-NO)
Rated current/Maximum peak current	A	6/40	6/40	6/40
Rated voltage/ Maximum switching voltage	V AC	230/—	230/—	230/—
Rated load AC1	VA	1380	1380	1380
Rated load AC15 (230 V AC)	VA	300	300	300
Single phase motor rating (230 V AC)	W	200	200	200
Nominal lamp rating 230V:				
incandescent/halogen	W	200	200	—
fluorescent tubes with electronic ballast	W	200	200	—
fluorescent tubes with electromagnetic ballast	W	200	200	—
CFL	W	200	200	—
LED 230 V	W	200	200	—
LV halogen or LED with electronic ballast	W	200	200	—
LV halogen or LED with electromagnetic ballast	W	200	200	—
Supply specification				
Nominal voltage (U_N)	V AC (50/60 Hz)	110…230	110…230	110…230
	V DC	—	—	—
Rated power AC/DC	VA (50 Hz)/W	2 / 0.5	2 / 0.5	2 / 0.5
Operating range	AC (50 Hz)	(0.8…1.1)U_N	(0.8…1.1)U_N	(0.8…1.1)U_N
	DC	—	—	—
Technical data				
Electrical life at rated load in AC1	cycles	$60 \cdot 10^3$	$60 \cdot 10^3$	$60 \cdot 10^3$
Maximum impulse duration		continuous	continuous	continuous
Dielectric strength between: open contacts	V AC	1000	1000	1000
Ambient temperature range	°C	–10…+50	–10…+50	–10…+50
Protection category		IP 20	IP 20	IP 20
Approvals (according to type)		CE UK CA	CE UK CA	CE UK CA

K

IV-2024, www.findernet.com

Downloaded from Arrow.com.

Bluetooth single channel multifunction relay

Type 13.21.8.230.B000
- BLE communication protocol
- Round wall box (ie: Ø 60 mm) mounting
- 12 available functions
- Up to 8 scenarios
- Pushbutton Phase or Neutral connection

Radio frequency remote actuator for BLISS2

Type 13.21.8.230.S000
- 868 MHz long-range radio frequency transmission
- Multi-zone heating/cooling function
- Hygrostat function combined with the BLISS2 thermostat
- Compatible with the BLISS2 smart thermostat

13.21
Screw terminals

For outline drawing see page 16

		NEW 13.21.8.230.B000 YESLY	NEW 13.21.8.230.S000 BLISS2
		• 1 CO (SPDT) 16 A 250 V AC • Bluetooth Low Energy (BLE) transmission protocol • 128-bit encrypted connection • Programmable via app Finder YOU compatible with iOS and Android operating systems • It can be connected to wired buttons or to BEYON and 013B9 wireless buttons • Recess mounting	• 1 CO (SPDT) 16 A 250 V AC • Compatible with BLISS2 smart thermostat • Heating/cooling systems - direct or solenoid control • It can be used in dehumidification or forced ventilation systems
Contact specification			
Contact configuration		1 CO (SPDT)	1 CO (SPDT)
Rated current	A	16	16
Rated voltage/ Maximum switching voltage	V AC	250	250
Rated load AC1	VA	3600	3600
Rated load AC15 (230 V AC)	VA	600	600
Single phase motor rating (230 V AC)	W	500	500
Nominal lamp rating 230V:			
incandescent/halogen	W	1000	—
fluorescent tubes with electronic ballast	W	500	—
fluorescent tubes with electromagnetic ballast	W	350	—
CFL	W	300	—
LED 230 V	W	200	—
LV halogen or LED with electronic ballast	W	200	—
LV halogen or LED with electromagnetic ballast	W	500	—
Supply specification			
Nominal voltage (U_N)	V AC (50/60 Hz)	110…230	110…230
	V DC	—	—
Rated power AC/DC	VA (50 Hz)/W	2.8 / 0.8	2.8 / 0.8
Operating range	AC (50 Hz)	(0.8…1.1)U_N	(0.8…1.1)U_N
	DC	—	—
Technical data			
Electrical life at rated load in AC1	cycles	$50 \cdot 10^3$	$50 \cdot 10^3$
Maximum impulse duration		continuous	—
Dielectric strength between: open contacts	V AC	1000	1000
Ambient temperature range	°C	–10…+50	–10…+50
Protection category		IP 20	IP 20
Approvals (according to type)		CE UK CA	CE UK CA

Downloaded from Arrow.com.

Ordering information

Example: Multifunction relay with YESLY Bluetooth, 2 contacts 6 A NO (SPST-NO), 110…230 V AC supply.

1	3	.	7	2	.	8	.	2	3	0	.	B	0	0	0
												A	B	C	D

Series

Type
0 = Step/Monostable, 35 mm rail (EN 60715) mount, 35 mm wide
1 = Call & Reset relay, 35 mm rail (EN 60715) mount, 17.5 mm wide
2 = Wall box mounting
3 = Monostable relay, switch box mounting
6 = Multifunction relay, 35 mm rail (EN 60715) mount, 17.5 mm wide
7 = YESLY - Multifunction relay compatible with the most popular Italian wall switch systems: AVE, BTicino, Gewiss, Simon-Urmet, Vimar
8 = Modular step relay, 35 mm rail (EN 60715) mount, 17.5 mm wide
9 = Step relay and timing step relay, switch box mounting
S = YESLY - Shutter/blind/curtain actuator, wall box mounting

No. of poles
1 = 1 pole
2 = 2 poles 6 A NO (SPST-NO) (type 13.72 and 13.22/S2)
2 = 1 pole CO (SPDT) + 1 NO (SPST-NO)

Supply version
0 = AC (50/60 Hz)/DC
8 = AC (50/60 Hz)
9 = DC

Supply voltage
012 = 12 V AC/DC (13.01 and 13.12 only)
012 = 12 V AC (13.31 only)
024 = 24 V AC/DC (13.01 and 13.12 only)
024 = 24 V DC (13.31 only)
024 = 12…24 V AC/DC (13.61 only)
125 = (110…125)V AC (13.01 only)
230 = (230…240)V AC (13.01 and 13.11)
230 = 110…240 V AC (13.61 only)
230 = 230 V AC (13.31, 13.81 and 13.91)
230 = 110…230 V AC (13.21, 13.22, 13.72, 13.S2)

A: Transmission protocol
(only for Type 13.21/22/S2/72)
B = Bluetooth Low Energy (BLE)
S = 868 MHz, compatible with BLISS2

A: Contacts material
0 = Standard
4 = Standard $AgSnO_2$ (only for 13.31)

B: Contact circuit
0 = Standard
3 = Standard NO (only for 13.31)

C
0 = Type 13.61 (Reset 3s)
1 = Type 13.61 (Reset 1s)
0 = Type 13.72 white
2 = Type 13.72 anthracite gray

Codes / Supply voltage
13.01.0.012.0000 12 V AC/DC
13.01.0.024.0000 24 V AC/DC
13.01.8.125.0000 110…125 V AC
13.01.8.230.0000 230…240 V AC
13.11.8.230.0000 230…240 V AC
13.12.0.012.0000 12 V AC/DC
13.12.0.024.0000 24 V AC/DC
13.21.8.230.B000 110…230 V AC YESLY
13.21.8.230.S000 110…230 V AC BLISS2
13.22.8.230.B000 110…230 V AC YESLY
13.S2.8.230.B000 110…230 V AC YESLY
13.31.8.012.4300 12 V AC
13.31.9.024.4300 24 V DC
13.31.8.230.4300 230 V AC
13.61.8.230.0000 110…240 V AC
13.61.8.230.0001 110…240 V AC
13.61.0.024.0000 12…24 V AC/DC
13.72.8.230.B000 110…230 V AC YESLY BLE white
13.72.8.230.B002 110…230 V AC YESLY BLE anthracite gray
13.81.8.230.0000 230 V AC
13.91.8.230.0000 230 V AC

Technical data

Insulation		13.01.8	13.01.0	13.11 - 13.12	13.31 - 13.61	13.81 - 13.91
Dielectric strength						
between control circuit and supply	V AC	4000	—	—	—	—
between control circuit and contacts	V AC	4000	4000	—	—	—
between R-S-A2 and contacts	V AC	—	—	2000	—	—
between supply and contacts	V AC	4000	4000	—	2000	—
between open contacts	V AC	1000	1000	1000	1000	1000

Other data		13.01		13.11 - 13.12	13.31	13.61	13.81	13.91	13.21	13.22 13.S2 13.72
Power lost to the environment										
without contact current	W	2.2		—	0.4	1	1.2	0.7	0.4	0.5
with rated current	W	3.5		1.5	1.6	1.8	2	1.8	2.2	1.5
Max cable length for pushbutton connection	m	100		100	—	200	200	100	100	100
Max. no. of illuminated pushbutton	(≤1mA)	—		—	—	10*	15	12	—	5

Terminals		13.01		13.11 - 13.12 - 13.31 - 13.61 - 13.72 - 13.81 - 13.91		13.21 - 13.22 - 13.S2	
Max. wire size		solid cable	stranded cable	solid cable	stranded cable	solid cable	stranded cable
	mm^2	1 x 6 / 2 x 4	1 x 6 / 2 x 2.5	1 x 6 / 2 x 4	1 x 4 / 2 x 2.5	1 x 2.5 / 2 x 1.5	1 x 2.5 / 2 x 1.5
	AWG	1 x 10 / 2 x 12	1 x 10 / 2 x 14	1 x 10 / 2 x 12	1 x 12 / 2 x 14	1 x 14 / 2 x 16	1 x 14 / 2 x 16
Screw torque	Nm	0.8		0.8		0.5	

* For 8.230 version.

K

IV-2024, www.findernet.com

Downloaded from Arrow.com.

Functions for types 13.01, 13.11, 13.12, 13.81, 13.91

Type	Functions	
13.01		**Monostable.** On closure of a switch between terminals (B2-B3) the output contact will close, and remain so, until the switch opens.
		Step relay (bistable). After every impulse (B1-B2), the output contact changes state - alternately switching from open to closed and vice versa.
13.11 13.12		**Call and Reset relay.** On momentary closure of the Set switch (S), the output contact closes. Only a momentary closure of the Reset switch (R) will open the output contact.
13.81		**(RI) Step relay.** After every impulse, the output contact changes state - alternately switching from open to closed and vice versa.
13.91		**(RI) Step relay.** After every impulse, the output contact changes state - alternately switching from open to closed and vice versa.
	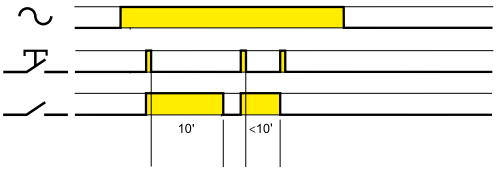	**(IT) Timing step relay.** On initial impulse the output contact closes and timing starts for the pre-set duration (fixed 10 min); On expiry of the time delay, the output contact opens. During the timing period it is possible to immediately open the contact with a further impulse.

Operating mode setup for type 13.91

RI → IT

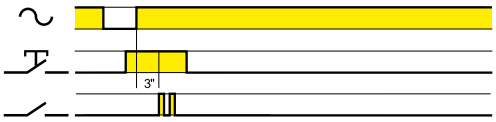

IT → RI

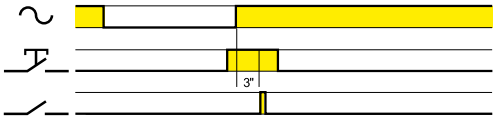

a) Remove the supply voltage
b) Press the control button
c) Apply the supply to the relay, keeping the button closed.
After 3 second, the light will flash twice to indicate the selection of the "IT" function, or flash once for "RI" function.

Downloaded from Arrow.com.

Functions for type 13.61

Type	Functions	
13.61.8.230	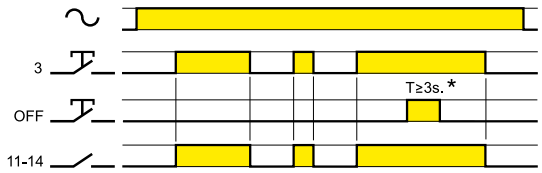	**(RM) Monostable.** On closure of a switch between terminal 3 and Line (or Neutral, in case of 3-wire connection) the output contact will close, and remain so, until the switch opens. * T≥1s. - Type 13.61.8.230.0001
	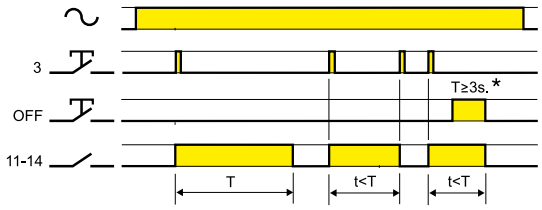	**(IT) Timing step relay.** On initial impulse the output contact closes and timing starts for the pre-set duration T; On expiry of the time delay, the output contact opens. During the timing period it is possible to immediately open the contact with a further impulse. Switch-off delay time: 30s…20min. * T≥1s. - Type 13.61.8.230.0001
		(RI) Step relay. After every impulse, the output contact changes state - alternately switching from open to closed and vice versa. * T≥1s. - Type 13.61.8.230.0001
	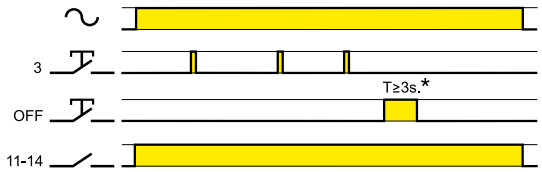	**Light ON.** With this function set - the output contact stays permanently closed. * T≥1s. - Type 13.61.8.230.0001
13.61.0.024	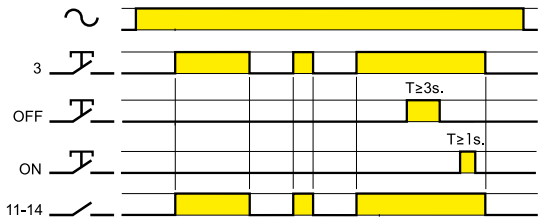	**(RM) Monostable.** On closure of a switch between terminal 3 and Line (or Neutral, in case of 3-wire connection) the output contact will close, and remain so, until the switch opens.
	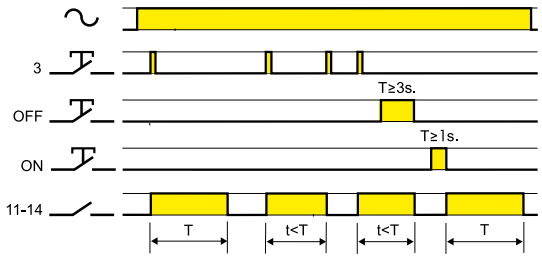	**(IT) Timing step relay.** On initial impulse the output contact closes and timing starts for the pre-set duration T; On expiry of the time delay, the output contact opens. During the timing period it is possible to immediately open the contact with a further impulse. Switch-off delay time: 30s…20min.
	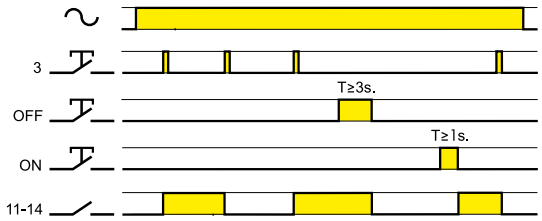	**(RI) Step relay.** After every impulse, the output contact changes state - alternately switching from open to closed and vice versa.
		Light ON. With this function set - the output contact stays permanently closed.

K

IV-2024, www.findernet.com

Downloaded from Arrow.com.

Functions for type 13.22, 13.72 and 13.21.8.230.B000

Relay settings

Multifunction electronic relays can be configured with the Finder YOU app, available for iOS or Android systems.
This product is ready-to-use preset with the factory setting (RI) Step relay on both channels.

Type	Functions	
13.21-B000 13.22 13.72		**(RM) Monostable relay.** On closure of the switch the output will close, and remain so, until the switch opens.
	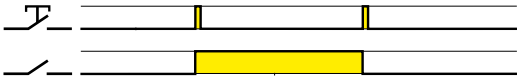	**(RI) Step relay (pushbutton control).** After every impulse, the output contact changes state - alternately switching from open to closed and vice versa.
		(RIa) Step relay - lighting switch control (Type 13.22 and 13.21.8.230.B000 only). Each time a lighting switch is activated, the output contact changes state. The output state can also be changed using YESLY wireless pushbutton, a smartphone, or voice assistants. Ideal for converting a traditional lighting system using one, two, or four way switches, into a Smart system. (See page 17).
	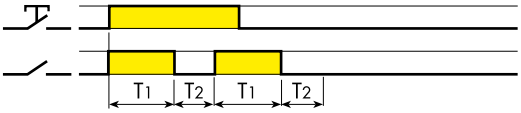	**(LE) Asymmetric flasher (starting pulse on) with control signal.** Power is permanently applied to the relay. Closing Signal Switch (S) causes the output contacts to transfer immediately and cycle between ON (T_1) and OFF (T_2), until opened.
		(DE) Interval with control signal on. Power is permanently applied to the relay. On momentary or maintained closure of Signal Switch (S), the output contacts transfer, and remain so for the duration of the preset delay, after which they reset.
	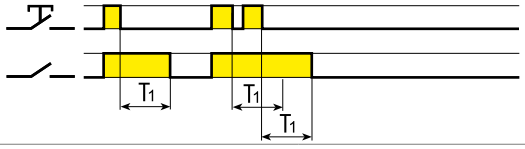	**(BE) Staircase timer.** On initial impulse the output contact closes and timing starts for the pre-set duration; subsequent impulses during the timing period will extend the timing period by the full pre-set value. On expiry of the time delay, the output contact opens.
	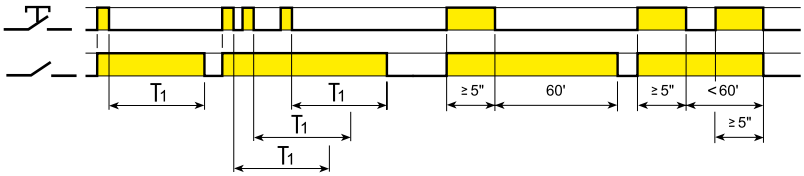	**(ME) Staircase timer + Staircase maintenance.** In addition to the Staircase timer function (BE), an impulse of ≥ 5 seconds will close the output contact for 60 minutes, after which time the contact will open. Ideal for maintenance or cleaning activities. The 60 minute timing can be interrupted by a further impulse of ≥ 5 seconds, when the output contact then opens.
	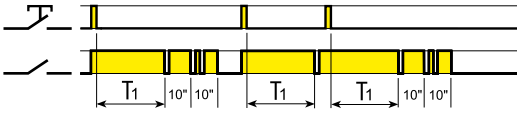	**(BP) Staircase timer with switch off early warning.** On initial impulse the output contact closes and the timing starts for the pre-set duration. After the timing period, the output contact blinks off once; 10 seconds later the contact blinks off twice, and after a further 10 seconds the contact opens. During the pre-set and 20 second warning time, it is possible, by a further impulse, to extend the time by the full pre-set value.
	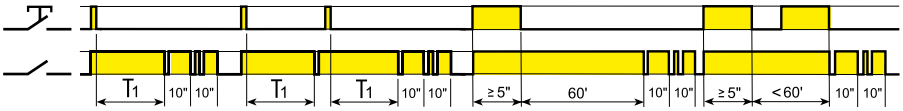	**(MP) Staircase timer with switch off early warning + staircase maintenance.** In addition to the Staircase timer function (BP), an impulse of ≥ 5 seconds will close the output contact for 60 minutes, after which time the output contact blinks off once; 10 seconds later the contact blinks off twice, and after a further 10 seconds the contact will open. Ideal for maintenance or cleaning activities. The 60 minute timing can be interrupted by a further impulse of ≥ 5 seconds, when the output contact then opens.

K

Downloaded from Arrow.com.

Functions for type 13.22, 13.72, 13.21.8.230.B000 and 13.S2

Type	Functions	
13.21-B000 13.22 13.72	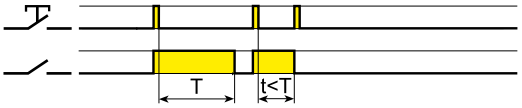	**(IT) Timing step relay.** On initial impulse the output contact closes and timing starts. On expiry of the time delay, the output contact opens. During the timing period it is possible to immediately open the contact with a further impulse.
	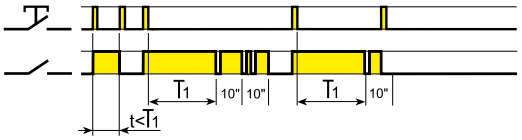	**(IP) Timing step relay with switch off early warning.** On initial impulse the output contact closes and timing starts. After the timing period, the output contact blinks off once; 10 seconds later the contact blinks off twice, and after a further 10 seconds the contact opens. During the pre-set and 20 second warning time, it is possible to immediately open the output contact by a further impulse.
	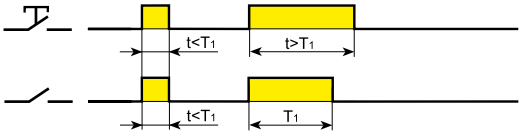	**(FZ) Timing monostable.** The output will be closed when the switch is closed, except where the switch is closed for greater than the preset time T_1 - in which case the output contact opens.
13.22 13.72	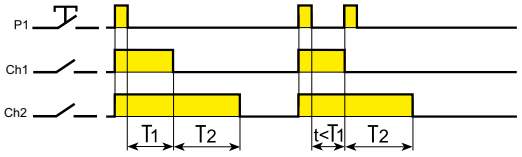	**(VB) Bathroom light + fan.** Channels Ch1 and Ch2 both close when the P1 command is pressed. At the expiry of T_1 Ch1 opens and after a further delay of T_2, Ch2 opens. Ch1 can be prematurely opened by another press of P1.
	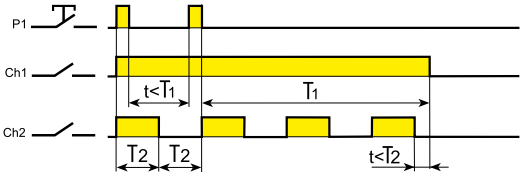	**(CP) Ringbell + light.** A press to P1 closes Ch1 for the pre-set time T_1. While Ch1 is closed Ch2 executes a blinking function, at a rate set by T_2. Subsequent presses to P1 extends the Ch1 closed time by re-triggering T_1.
13.S2 13.72	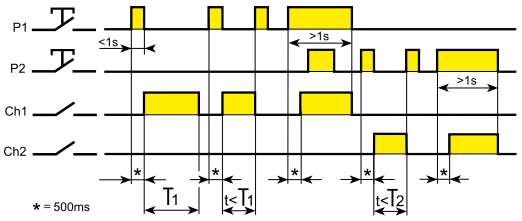	**(TP) Roller shutter.** A short press (< 1 second) to P1 ("up" pushbutton) initiates a 500ms delay before Ch1 closes for time T_1. Pressing P1 again within time period T_1 will immediately open Ch1 contact. If P1 is closed for more than 1 second the Ch1 contact will open immediately P1 opens. The same operation applies to P2 and Ch2 contact, used to control the "down" function.

Sequences

P1 (SET): press to advance through the sequence

P2 (RESET): press to return to Step 1

Type	Functions	Sequences			
		1	2	3	4
13.22 13.72	02				
	03				
	04	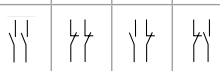			
	05	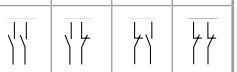			
	06	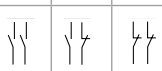			
	07	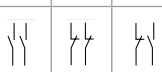			
	08	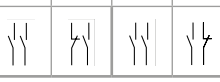			

Downloaded from Arrow.com.

Wiring diagrams (13.01, 13.11, 13.12 and 13.31)

Type 13.01
Step wiring diagram

Red LED indication:
Continuous = relay ON

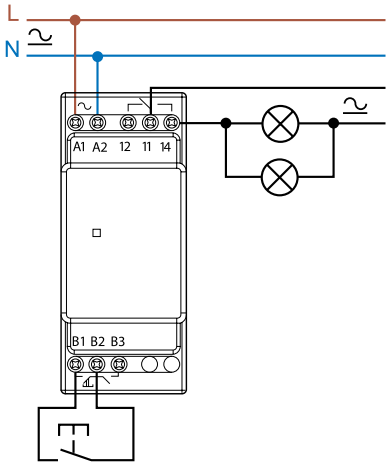

Type 13.01
Monostable wiring diagram

Red LED indication:
Continuous = relay ON

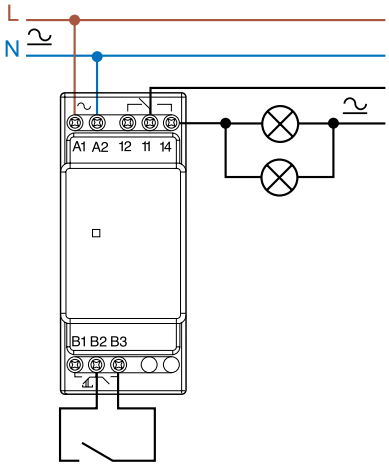

Type 13.11
Call & reset relay

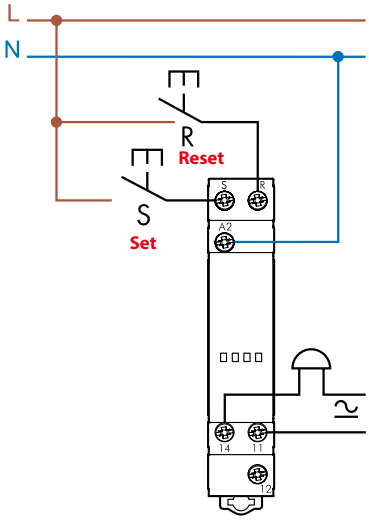

Type 13.12
Call & reset relay

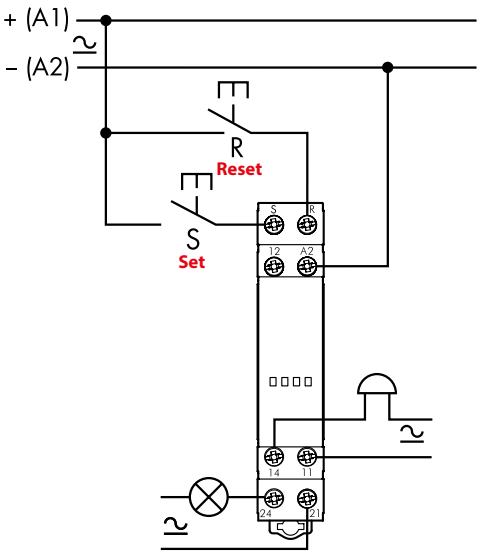

Type 13.31
Connection

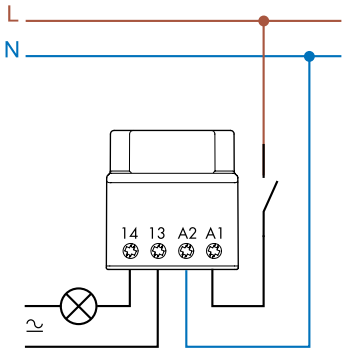

K

Downloaded from Arrow.com.

Wiring diagrams (13.61)

Type 13.61.8.230
3 wire connection
Red LED indication:
Continuous = relay ON
Blinking = relay OFF

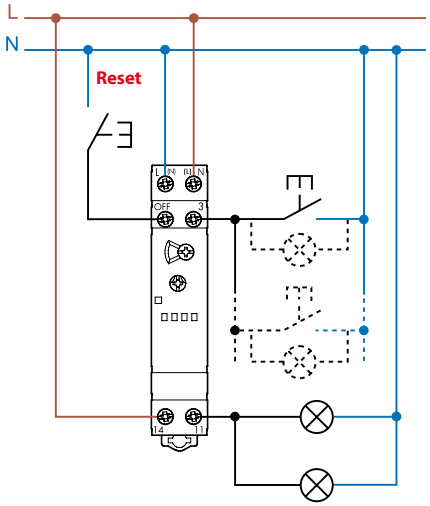

Maximum 10 (≤ 1 mA)
illuminated push buttons

Type 13.61.8.230
4 wire connection
Red LED indication:
Continuous = relay ON
Blinking = relay OFF

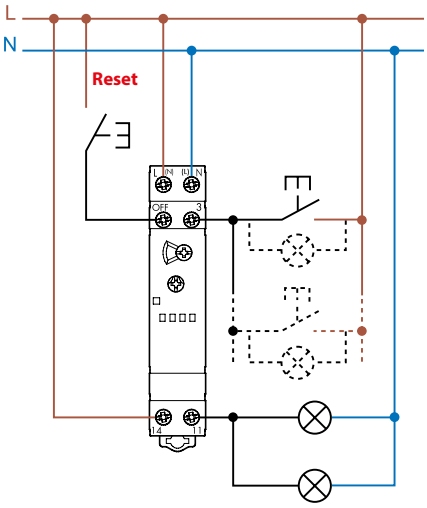

Maximum 10 (≤ 1 mA)
illuminated push buttons

Type 13.61.0.024
4 wire connection
Red LED indication:
Continuous = relay ON
Blinking = relay OFF

12...24 V AC/DC

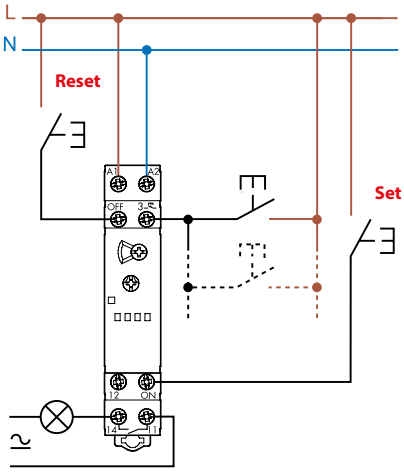

Type 13.61.8.230 - Examples of multiple 4 wire connection with centralized reset pushbutton

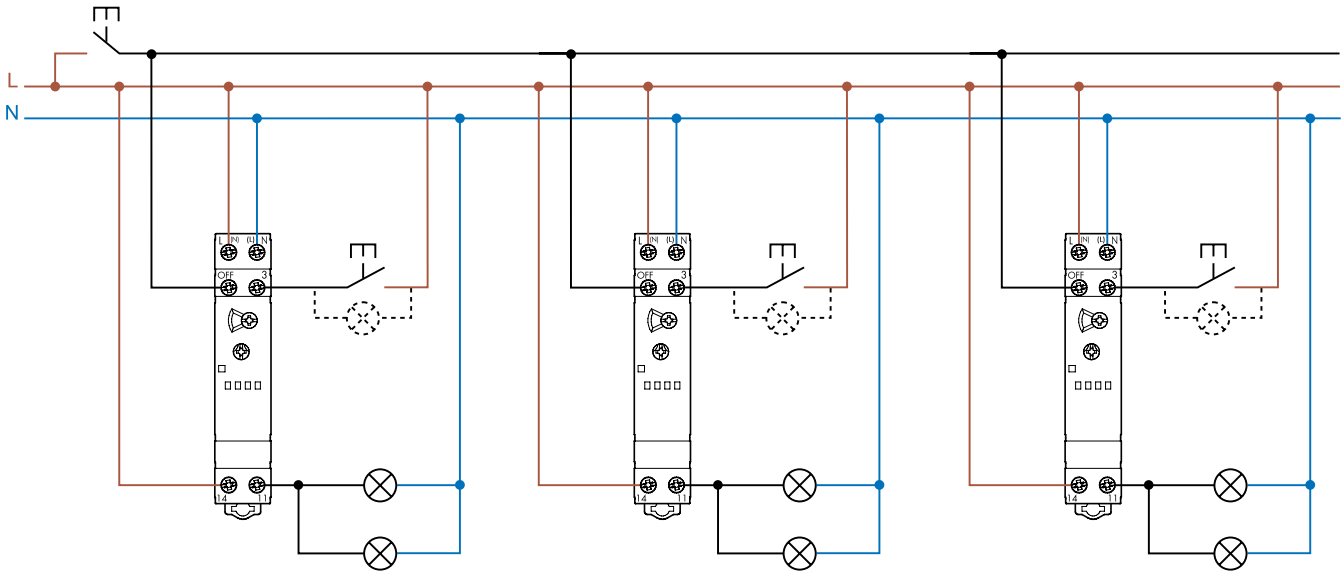

K

Downloaded from Arrow.com.

Wiring diagrams (13.81, 13.91 and 13.21.8.230.B000)

Type 13.81
3 wire connection
Red LED indication: a
Continuous = relay ON
Blinking = relay OFF

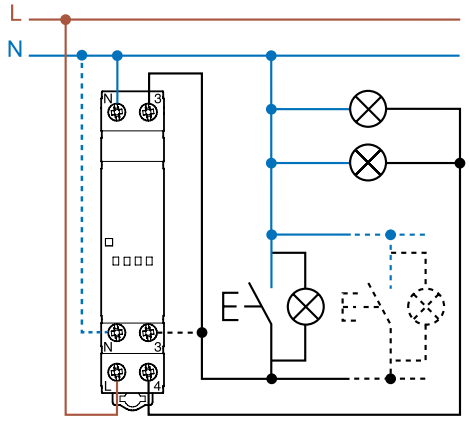

Maximum 15 (≤ 1 mA)
illuminated push buttons

Type 13.81
4 wire connection
Red LED indication:
Continuous = relay ON
Blinking = relay OFF

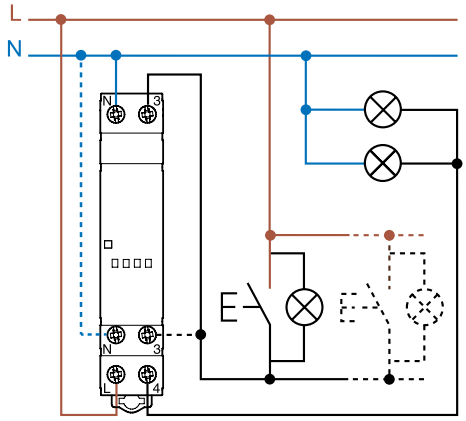

Maximum 15 (≤ 1 mA)
illuminated push buttons

Type 13.91
3 wire connection

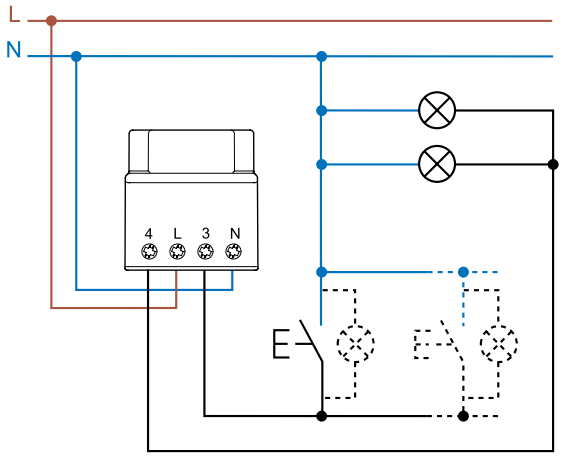

Maximum 12 (≤ 1 mA)
illuminated push buttons

Type 13.91
4 wire connection

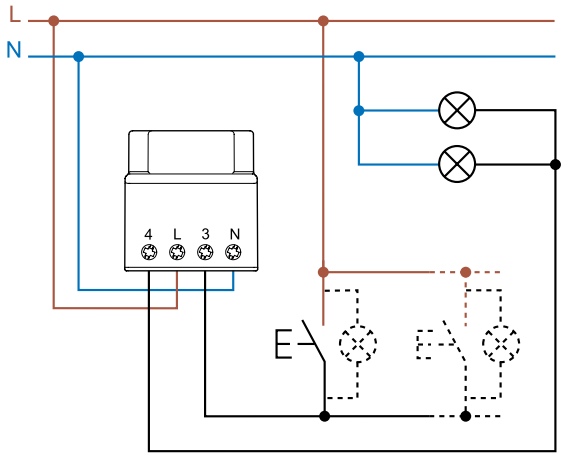

Maximum 12 (≤ 1 mA)
illuminated push buttons

Type 13.21.8.230.B000
Wiring with pushbutton to phase

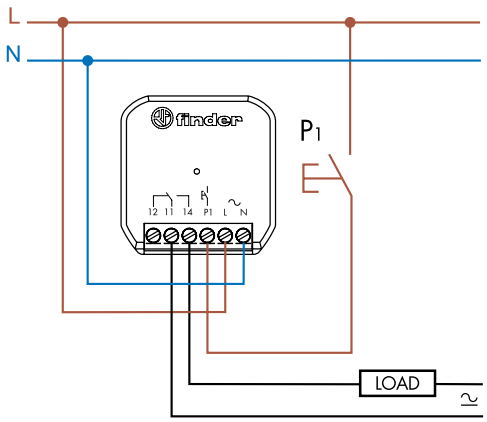

Type 13.21.8.230.B000
Wiring with pushbutton to neutral

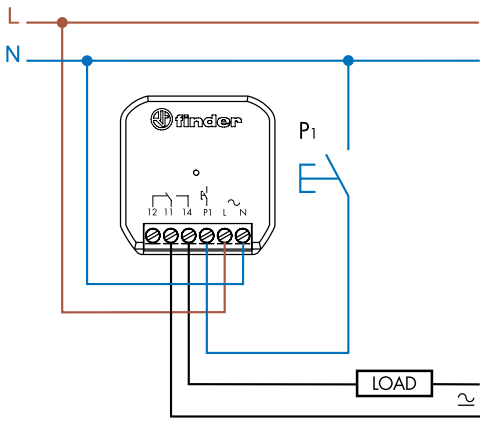

Note:

- **If the load is powered by a phase other than the one that powers the 13.21, a 50% reduction in the lamp capacity must be considered (set the "Different phase" function from the Finder YOU app).**

Downloaded from Arrow.com.

Wiring diagrams (13.21.8.230.S000, 13.22, 13.S2 and 13.72)

Type 13.22
4 wire connection

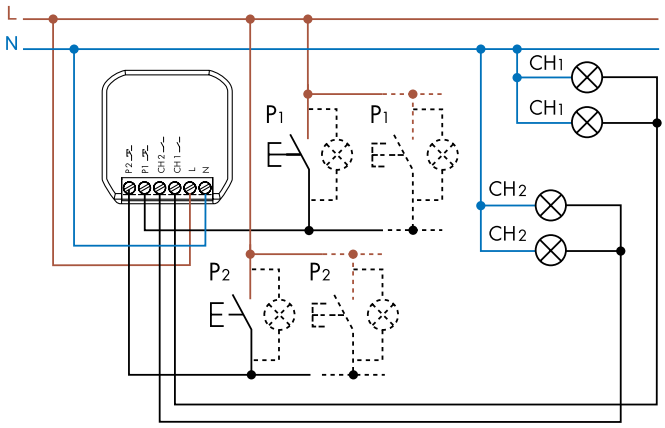

Maximum 5 (≤ 1 mA)
illuminated push buttons

Type 13.S2
4 wire connection

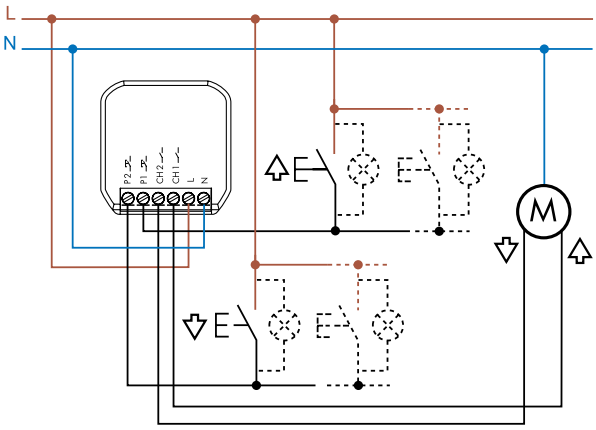

Maximum 5 (≤ 1 mA)
illuminated push buttons

Type 13.72
4 wire connection

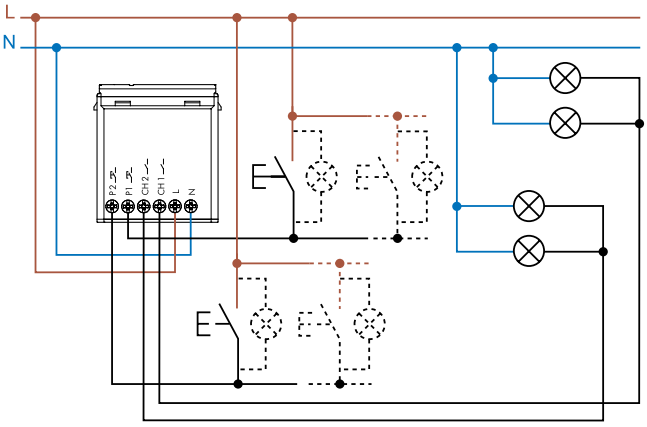

Maximum 5 (≤ 1 mA)
illuminated push buttons

Type 13.21.8.230.S000
Solenoid valve with 2, 3 and 4 wires or direct connection

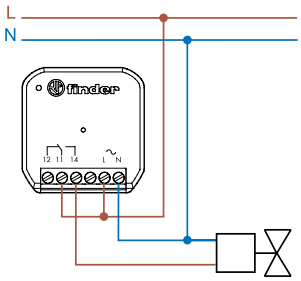

2 wires

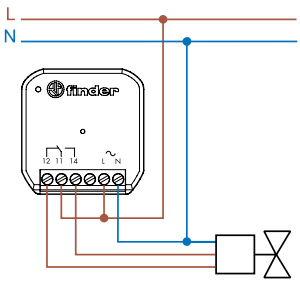

3 wires

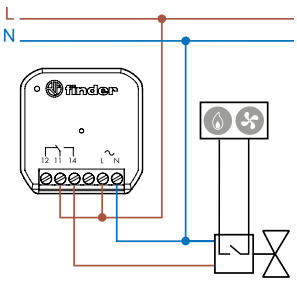

4 wires

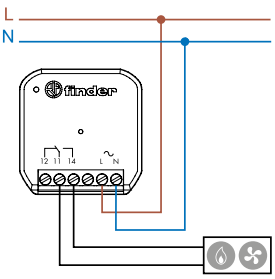

Heating/cooling

Example of connection with a 230 V AC solenoid valve, always refer to the technical characteristics of the solenoid valve.

K

Downloaded from Arrow.com.

Examples of applications

Function TP - Roller Blinds, Shutters and Curtains

Type 13.72

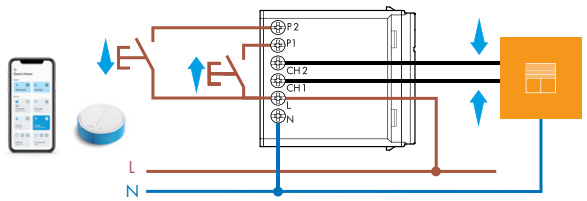

Ch1-P1: up
Ch2-P2: down

Type 13.S2

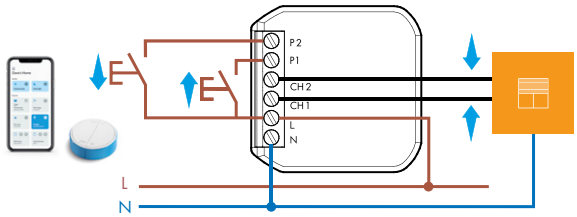

Ch1-P1: up
Ch2-P2: down

Function VB – Bathroom light + fan

Type 13.72

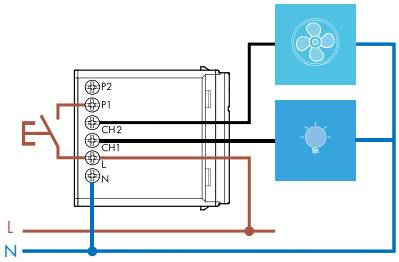

Type 13.22

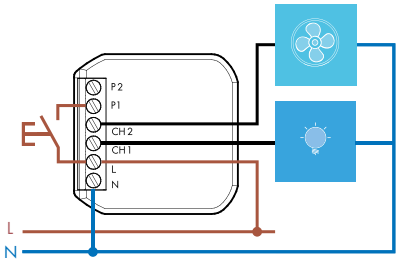

Function CP – Ringbell + Lights

Type 13.72

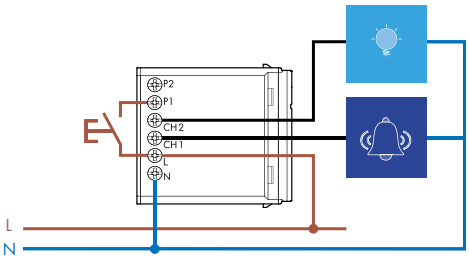

Type 13.22

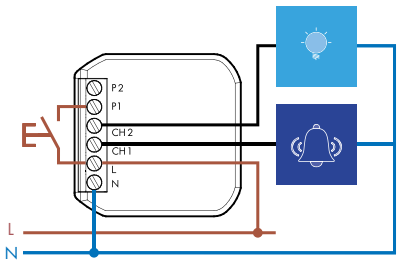

Type 13.22 - Special function RIa - Step relay (switch control).
Ideal for converting a traditional lighting system using one, two, or four way switches, into a Smart system.

The Smart system controls with just a momentary push to a wired, YESLY wireless or Smartphone pushbutton

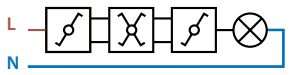

Traditional installation

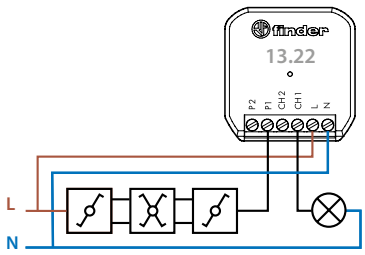

A Smart installation

K

Downloaded from Arrow.com.

Examples of applications

Type 13.21.8.230 - Special function RIa - Step relay (switch control).
Ideal for converting a traditional lighting system using one, two, or four way switches, into a Smart system.
Any existing system can be made Smart with minimum change or disruption

The smart system can be controlled by: wireless buttons, smartphone and gateway

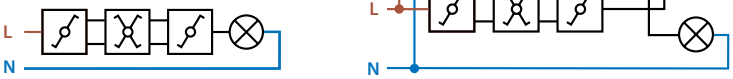

Traditional installation *A Smart installation*

IV-2024, www.findernet.com
Downloaded from Arrow.com.

Outline drawings

Type 13.01
Screw terminal

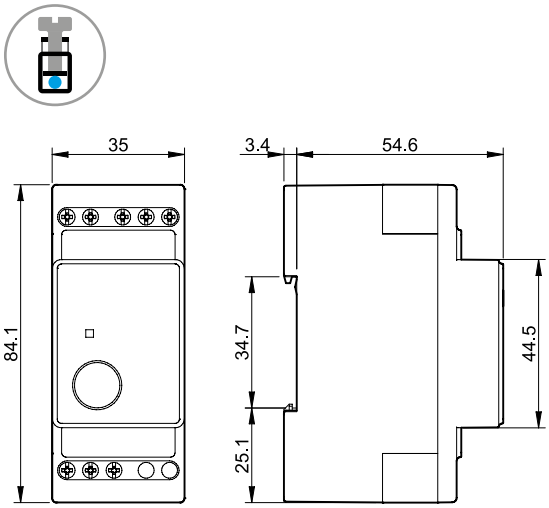

Type 13.11
Screw terminal

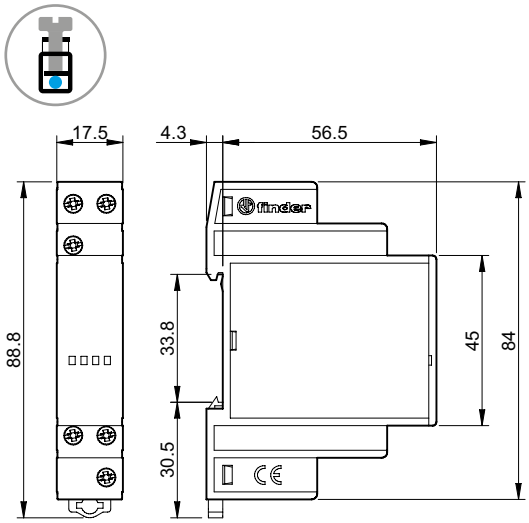

Type 13.12
Screw terminal

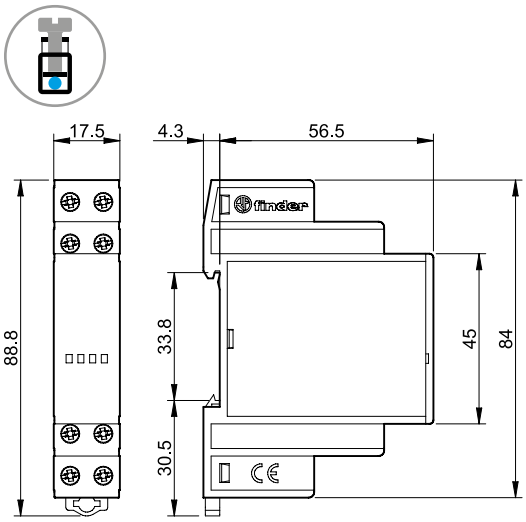

Types 13.31/13.91
Screw terminal

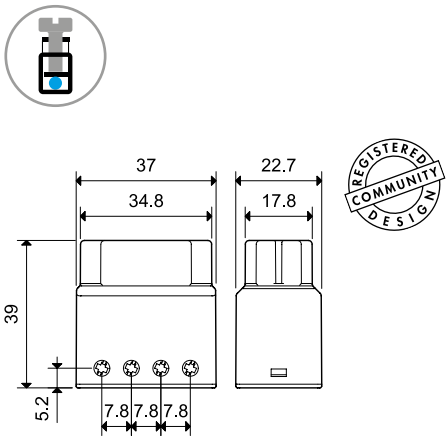

Type 13.61.0.024.0000
Screw terminal

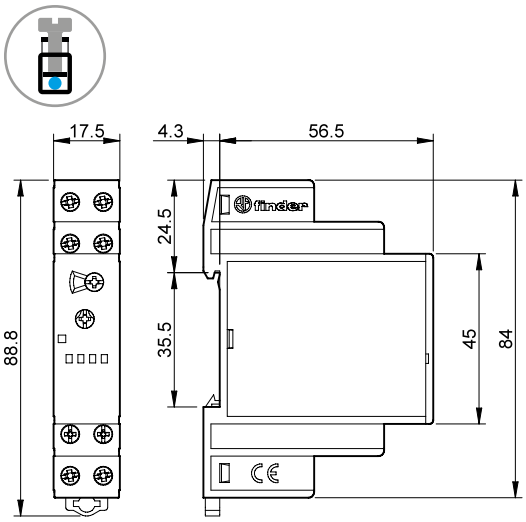

Type 13.61.8.230.0000
Screw terminal

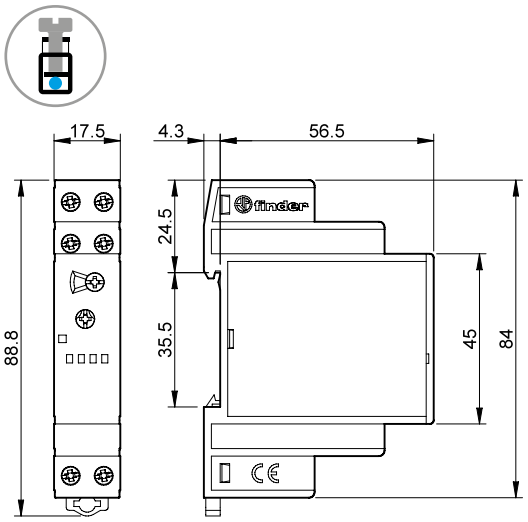

Downloaded from Arrow.com.

Outline drawings

Type 13.81
Screw terminal

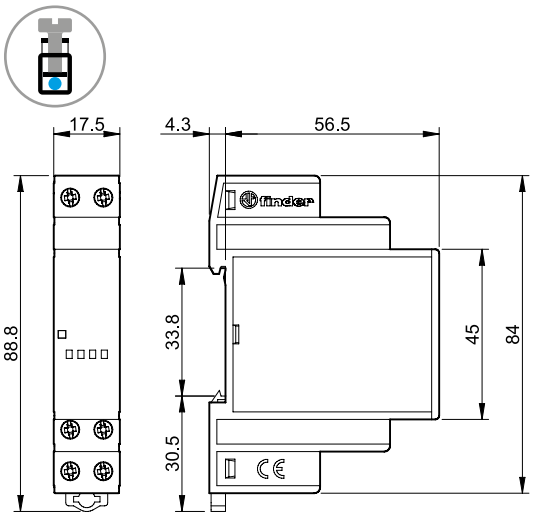

Type 13.72
Screw terminal

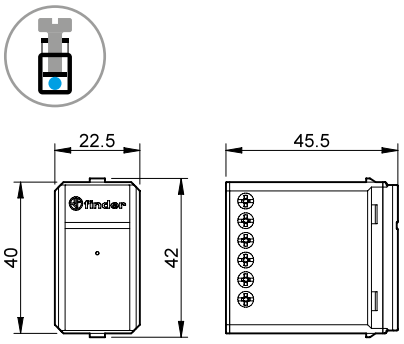

Type 13.21 / 13.22 / 13.S2
Screw terminal

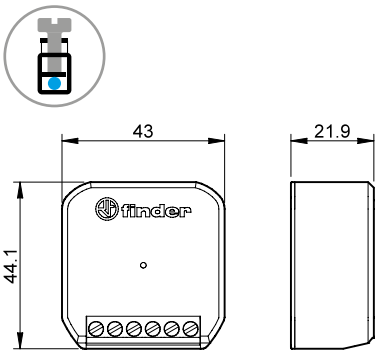

Type 13.21.8.230.S000
Screw terminal

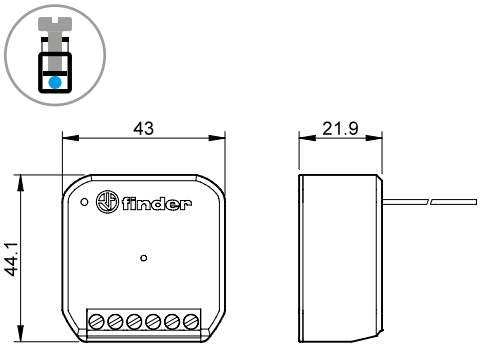

K

Downloaded from Arrow.com.

Accessories

011.01

Adaptor for panel mounting, for type 13.01, 35 mm wide	011.01

020.01

Adaptor for panel mounting, for type 13.11, 13.12, 13.61 and 13.81, 17.5 mm wide	020.01

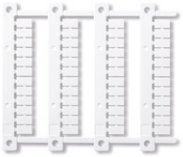

060.48

Sheet of marker tags (CEMBRE Thermal transfer printers) for relays types 13.11, 13.12, 13.61 and 13.81 (48 tags), 6 x 12 mm	060.48

013.00

Pushbutton phase/neutral converter. Use this with a pre-existing neutral wired pushbutton when retro fitting a device designed only for phase connected pushbuttons. This avoids any radical change to the existing wiring.	013.00

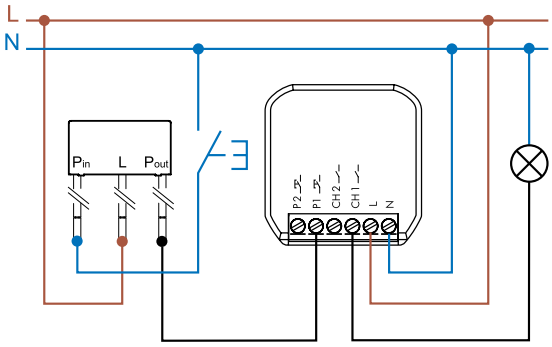

Application example with type 13.22

013.17

Adapter for DIN rail, to install devices 13.22, 13.21, 13.S2 in the electrical panel.	013.17

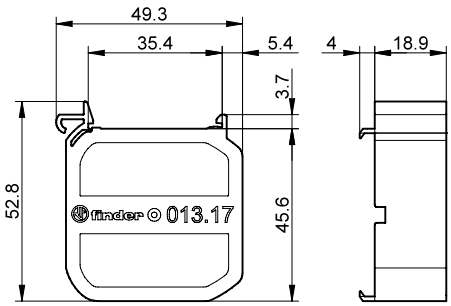

K

Downloaded from Arrow.com.

Downloaded from Arrow.com.