SCALA NON IMPEGNATIVA (DO NOT SCALE)	METRIC	THIRD ANGLE PROJECTION
DIMENSIONI IN (DIMENSIONS IN) mm		

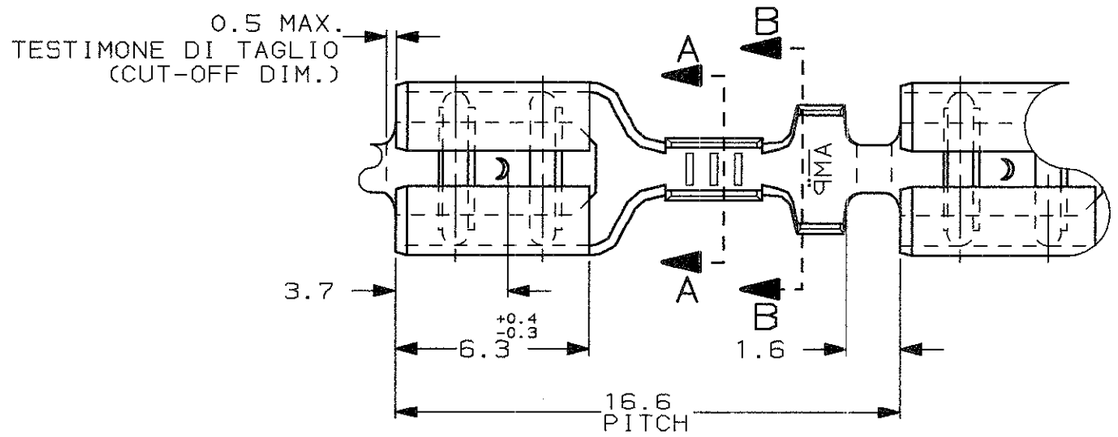

1) STATO DI FORNITURA - SCALA 1:1
(SUPPLY CONDITION - SCALE 1:1)



SENSO DI USCITA DEL TERMINALE DALLA BOBINA
(DIRECTION OFF TOP OF REEL)

2) SPECIFICA DI PRODOTTO 108-20019
(PRODUCT SPEC. 108-20019)

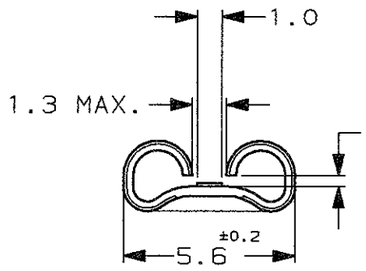

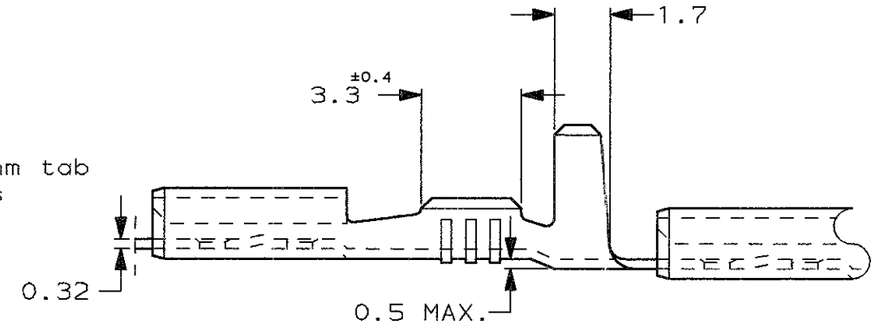

SECTION A-A
(SECTION A-A)

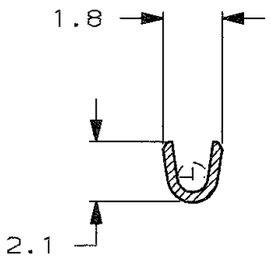

SEZIONE B-B
(SECTION B-B)

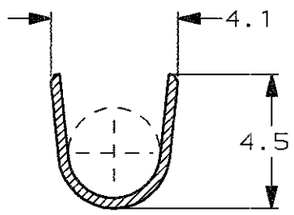

STAGNATO (TIN PLATED)	OTTONE (BRASS)	0-160778-2	
FINITURA / COLORE (FINISH / COLOUR)	MATERIALE (MATERIAL)	NUMERO (AMP P/N)	REV

CUSTOMER DWG. FOR REFERENCE ONLY

DISEGNO PER CLIENTE SOLO PER RIFERIMENTO

THIS DRAWING IS UNPUBLISHED | RELEASE FOR PUBLICATION 19

© COPYRIGHT 19 BY AMP INCORPORATED, HARRISBURG, PA. ALL INTERNATIONAL RIGHT RESERVED. AMP PRODUCTS MAY BE COVERED BY U.S. AND FOREIGN PATENT AND/OR PATENT PENDING

TOLLERANZE, SE NON DIVERSAMENTE SPECIFICATO (TOLERANCES, UNLESS OTHERWISE SPECIFIED)	DIAM. ISOLANTE (INS. DIA. RANGE)	RANGO FILO (WIRE RANGE) mm2	SCALA (SCALE)
± 0.3	2.3-3.3	0.2-0.5	5:1
ANGOLI (ANGLES) ± 2°			

AMP ITALIA S.p.A.
Corso F.lli Cervi,15
COLLEGNO (TORINO)

REV.	REVISIONI (REVISION RECORD)	DIS. (DR)	DATA (DATE)
C1	CORRECTED P/N TABLE ET00-0189-01	H.Y.	19 JUL 2001
C	OBSOLETED PARTS & REDRAWN ET00-0308-99	H.Y.	08 MAR 2000

DIS. H. YAALI (DR.) 27 JUNE 2000
CONT. C. TARTARI (CHK) 27 JUNE 2000
APP. (APP.)

DESCRIZIONE (DESCRIPTION) FASTON® Connector, .187" sr. REC. CONTACT.

LOC.	SIZE	NUMERO (DWG NO)	REV.	FOGLIO (SHEET)
I	A3	C-160778	C1	1 DI (OF) 1

DISTRIBUZIONE (PRINT DIST.)

Downloaded from Arrow.com.