FLAT RIBBON CABLE ASSEMBLY (IDCCS)

SMC CONNECTOR TYPE

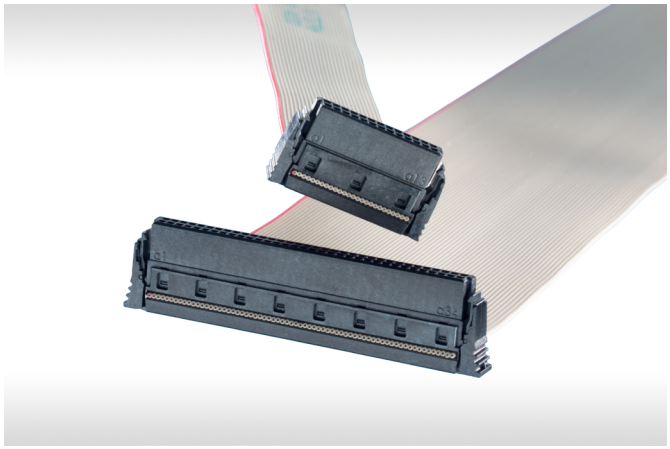

FEATURES

- Cable assemblies with IDC female connectors
- Ribbon cable AWG 30/7
- Three different cable types
- For available part numbers please refer to our website

APPLICATIONS

- Board to Wire and Wire to Board Connections
- Signal and Data transfer - up to 3 Gbit/s
- High number of connections – up to 80 pin
- Reliable connection on higher environmental conditions
- Field of application:
  - » Internal wiring
  - » Automation controls
  - » HMI (human machine interface) Connections

APPROVALS

- UL/ CSA of connector and wire in acc. to technical data
- Cable assemblies in accordance to IPC/WHMA-A-620 class 2

Downloaded from Arrow.com.

TECHNICAL DATA - CONNECTOR

Description	Standard	PCB Connectors, Cable Assemblies, B-to-B Adapter	Board-on IDC (Ribbon Cable AWG 30, 250 mm)
Climate category	DIN EN 60068-1 test b	55 / 150 / 56	55 / 125 / 56
Temperature range	-	-55 / 125 °C (PCB Connectors) -55 / 125 °C (TPE-S Cable)	-55 / 125 °C (TPE-S Cable)
Current rating per contact	IEC60512 test 5b	12-pin version at 20 °C ambient temperature: 1.7 A (up to 2.7 A with optimized layout)	
Air- and creepage distance	-	Contact - contact min. 0.4 mm	
Operating voltage	IEC 60664	The permissible operating voltages depend on the customer application and on the applicable or specified safety requirements. Insulation coordination according to IEC 60664-1 has to be regarded for the complete electrical device. Therefore, the maximum creepage and clearance distances of the mated connectors are specified for consideration as a part of the whole current path. In practice, reductions in creepage or clearance distances may occur due to the conductive pattern of the printed board or the wiring used, and have to be taken into account separately. As a result the creepage and clearance distances for the application may be reduced compared to those of the connector.	
Dielectric strength	IEC 60512 test 4a	Contact - contact 500 V_{rms}	
Contact resistance	IEC 60512 test 2a	< 25 mΩ < 35 mΩ (Board-to-Board Height 18.50 - 20.00 mm) < 10 mΩ (cable assemblies)	< 10 mΩ
Insulation resistance	IEC 60512 test 3a	> 10^4 MΩ	
Vibration, sine	IEC 60512 test 6d	10 – 2000 Hz 20 g	
Contact disturbance (while vibration test)	IEC 60512 test 2e	< 1 µs	
Shock halfsine	IEC 60512 test 6c	50 g 11 ms	
Contact disturbance (while shock test)	IEC 60512 test 2e	< 1 µs	
Mechanical operation	IEC 60512 test 9a	500 mating cycles	
Insertion and withdrawal force max.	IEC 60512 test 13b	0.5 N per contact	
Gauge retention force	IEC 60512 test 16e	> 0.1 N	
Processing Conditions			
Hand soldering temperature max.	IEC 60068-2-20	3.5 s at 350 °C	
Dip soldering temperature max.	IEC 60068-2-20	10 s at 260 °C	
Reflow soldering temperature max.	JEDEC J-STD-020	20 - 40 s at 260 °C	
Coplanarity	-	< 0.1 mm	

Downloaded from Arrow.com.

TECHNICAL DATA - CONNECTOR

Description	Standard	PCB Connectors, Cable Assemblies, B-to-B Adapter	Board-on IDC (Ribbon Cable AWG 30, 250 mm)
Housing Material			
Insulation body		LCP	
CTI value	IEC 112	175	
UL flame rating		UL 94 V-0	
UL file plastic material		E83005	
Contact Material			
Base material		Cu alloy	
Mating area		gold plating	–
Termination area		Sn	
Environment Compatibility			
Recycling		no flame-retardant additives, no toxic additives allow easy recycling	
Product Approval			
UL/CSA		E84703	

Partial LV214 testing for selected SMC configurations done. If you want to know more, please contact TE/ERNI.
In general, testings are done according to connector standards. No liability for usage of connectors in the application.

TECHNICAL DATA - WIRE

Description	Standard cable (PVC)	High Temperature Cable (TPE-S)	Halogen-free Cable (Polyolefin TPE-O)
Cross section	AWG-30/ 7/ 0.06 mm^2		
Conductor	stranded Cu wire, tinned, 7x0.102 / 0.06 mm^2		
Coded wire	available		
Insulation	PVC gray (similar to RAL 78032)	TPE-S gray (similar to RAL 78032)	TPE-O gray (similar to RAL 78032)
Insulation thickness	min. 0.1mm		
Shore hardness	94 ±2 (Shore A)	52 ±3 (Shore D)	94 ±2 (Shore A) resp. 50 ±3 (Shore D)
Technical Data			
Temperature range	-20/105 °C (fixed) -10/105 °C (mobile)	-60/125 °C (fixed) -40/125 °C (mobile)	-40/105 °C (fixed) -20/105 °C (mobile)
Dielectric strength	1500 V_{rms}	1000 V_{rms}	1200 V_{rms}
Conductor resistance	≤ 350 Ω/km at 20 °C		
Insulation resistance	≥ 20 MΩ x km at 20 °C		
Impedance	125 Ω (wire-wire) 80 Ω (Ground-Signal-Ground)	136 Ω (wire-wire)	110 Ω (wire-wire) 75 Ω (Ground-Signal-Ground)
Bending cycles (typical)	min. 1 million at 20 x cable diameter		
RoHS	compliant		
Flammability	UL 94 VW-1	IEC 60332-1-2	UL 1581 (Horizontal Flame Test)
Product-approval			
UL	UL Style 2678	– *	UL Style 22092
CSA	Yes	No	Yes

Downloaded from Arrow.com.

FLAT RIBBON CABLE (Unit:mm)

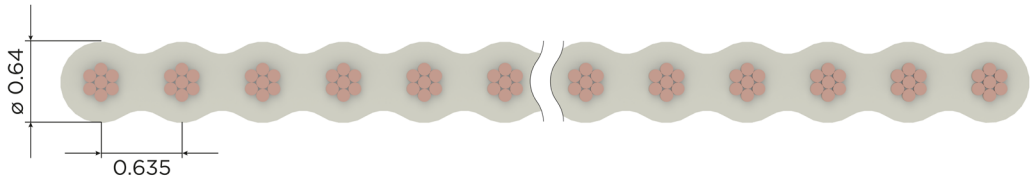

CONFIGURATIONS

STANDARD

Connector #1 Connector #2

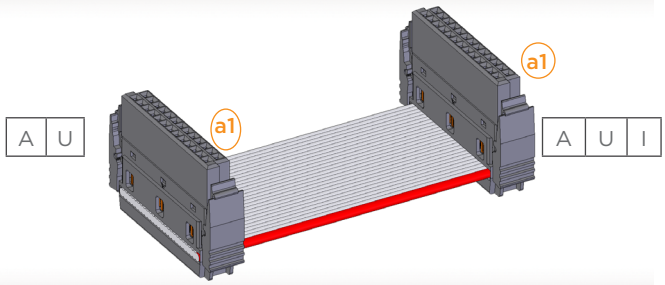

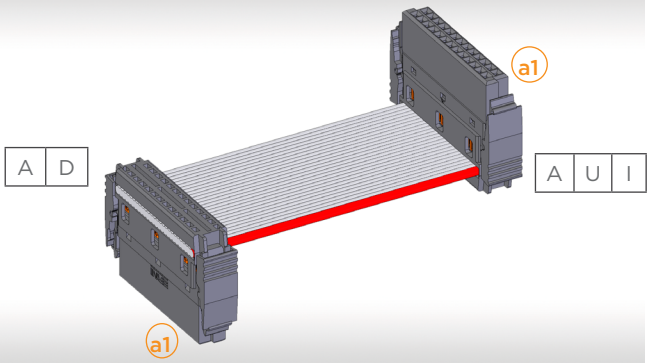

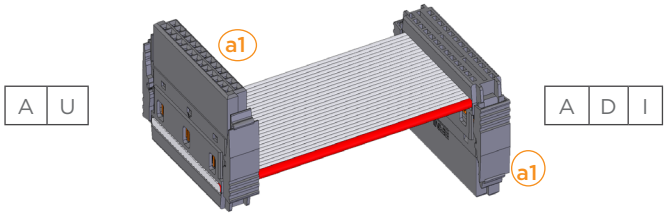

CROSSED

Connector #2

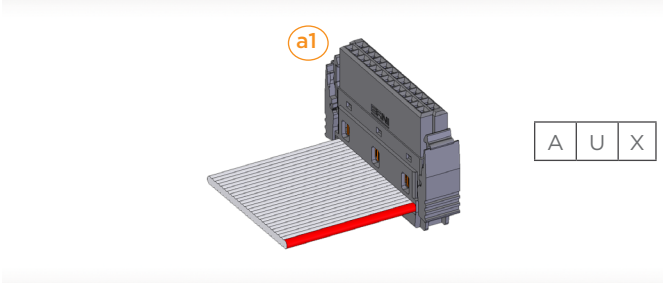

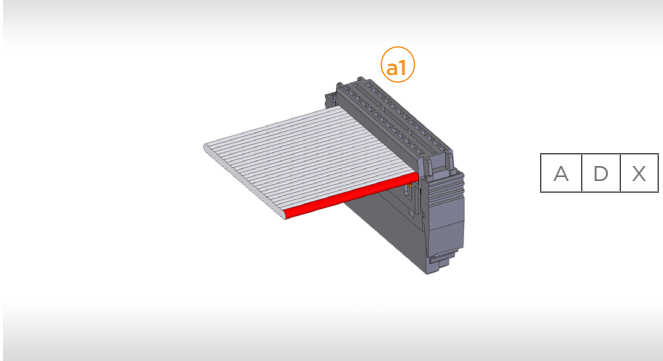

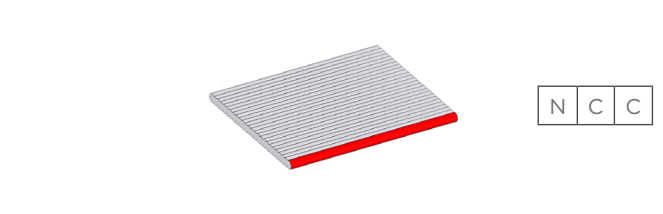

Downloaded from Arrow.com.

DIMENSIONS (Unit:mm)

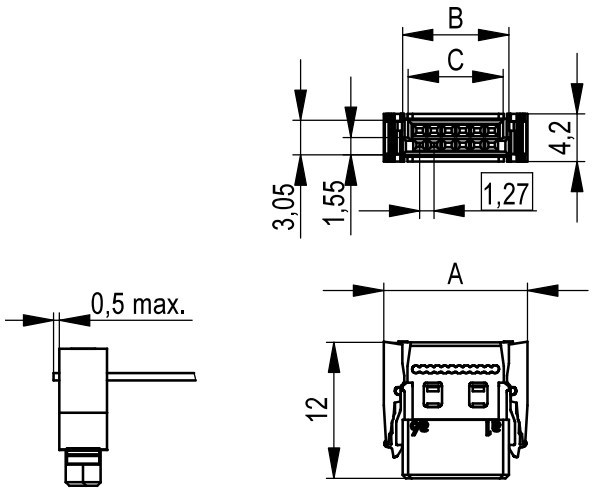

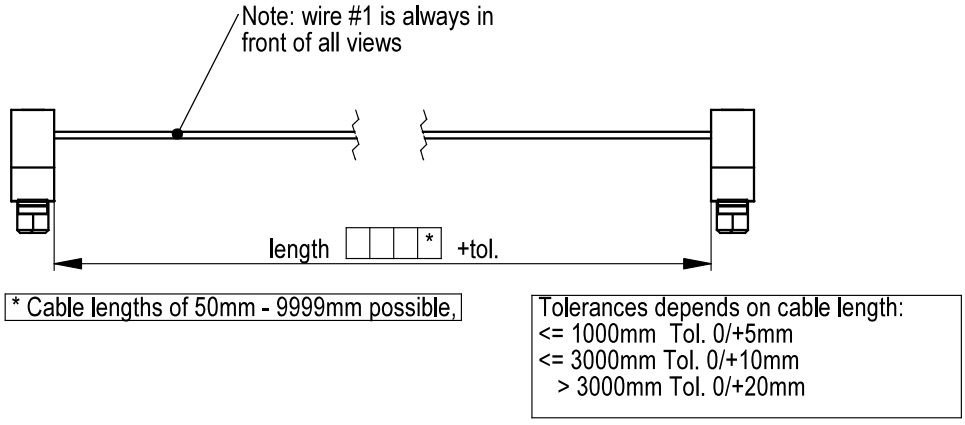

No. of Pin	Dim A	Dim B	Dim C
12	12.69	9.37	8.37
16	15.23	11.91	10.91
20	17.77	14.45	13.45
26	21.58	18.26	17.26
32	25.39	22.07	21.07
40	32.53	27. 15	26. 15
50	38.88	33.5	32.5
50SL•	38.52	33.5	32.5
68	50.31	44.93	43.93
80	57.93	52.55	51.55

Downloaded from Arrow.com.

PRODUCT CODE STRUCTURE

Part Number

IDCCS _ SMC _ 1,27 _ 26 _ AU _ AU I _ 400 _ PVC

Class

IDCCS	Configurable cable assembly

Connector type

SMC

Pin pitch

1,27	AWG-30
R	Ribbon cable

Pin count

12
16
20
26
32
40
50
50SL*
68
80

*Secure Lock

Isolation of wire

PVC	-20 °C to +105 °C
TP	-40 °C to +125 °C
HF	-20 °C to +105 °C, halogen free

Cable lengths

400	400 mm / 50 mm - 9999 mm possible

Orientation connector right Connector #2

I	I-connected (1:1)
X	X-connected (1:N)

AU	Angeled up
AD	Angeled down
NCC	Not connected

Orientation connector left Connector #1

AD	Angeled Down
AU	Angeled Up

Downloaded from Arrow.com.

PRODUCT SPECIFIC TECHNICAL NOTES

- Intended use: the offered products, i.e, cable assemblies, are components used in devices for internal wiring in non-critical industrial applications.
- Not intended to be used in live-support applications, no safety-classified applications, not intended for automotive use, not intended for applications with danger to life and limb.
- Desired audience: (professional) company customers who assume the full responsibility for their products including the ERNI cable assembly product under consideration.
- Product solely ERNI-internally sampled.
- Released-customer FAI report will not be provided (also includes PPaPs, CofCs, acceptance test certificates and IMDS Data).
- Summary drawing and datasheet available. No individual product drawings by part number.
- ERNI may change suppliers or mix materials from various sources as long as the specification laid down herein will be maintained (assumption of fit-form-function).
- Customer-specific assemblies outside these product offerings to be inquired separately.

Customer has to carefully check the product's appropriateness for the desired use (application) with the help of its technical specifications and additionally verify that the operation of the product in said application is in agreement with all requirements that may be applicable under the scope of the actual application (applicable regulation, law, and whatever more).

te.com

©2024 TE Connectivity Plc. Family of Companies. All Rights Reserved.

TE Connectivity, TE connectivity (logo) and Every Connection Counts are trademarks owned or licensed by the TE Connectivity Plc. family of companies. All other logos, products and/or company names referred to herein might be trademarks of their respective owners.

While TE has made every reasonable effort to ensure the accuracy of the information in this document, TE does not guarantee that it is error-free, nor does TE make any other representation, warranty or guarantee that the information is accurate, correct, reliable or current. TE reserves the right to make any changes to the information contained herein without prior notice. TE Connectivity assumes only those obligations set forth in the terms and conditions for this product and shall in no event be liable for any incidental, indirect, or consequential damages arising out of the sale, resale, use, or misapplication of the product. TE expressly disclaims any implied warranties with respect to the information contained herein, including, but not limited to, implied warranties of merchantability or fitness for a particular purpose. Dimensions, specifications and/or information contained herein are for reference purposes only and are subject to change without notice. Consult TE for the latest dimensions, specifications and/or information. Users of TE Connectivity products must make their own assessment as to whether the respective product is suitable for the respective desired application.

11/24 ED

Downloaded from Arrow.com.