Alle Rechte vorbehalten/ *All rights reserved*

Mating face according to MIL-C-24308 / DIN 41 652 / CECC 75301-802

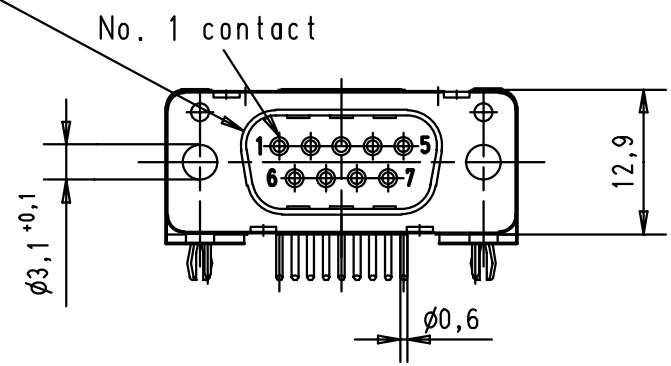

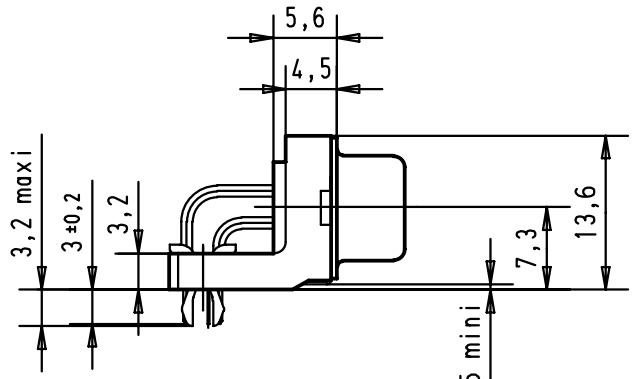

Printed board layout(1,6±0,2 thick)
View componemt side
(PCB plating = Tin)

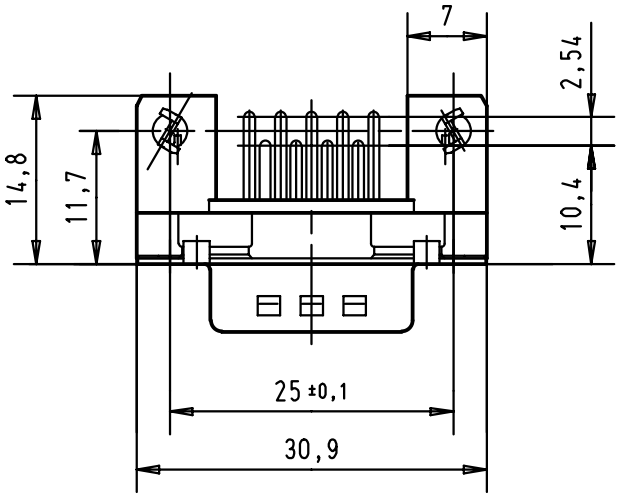

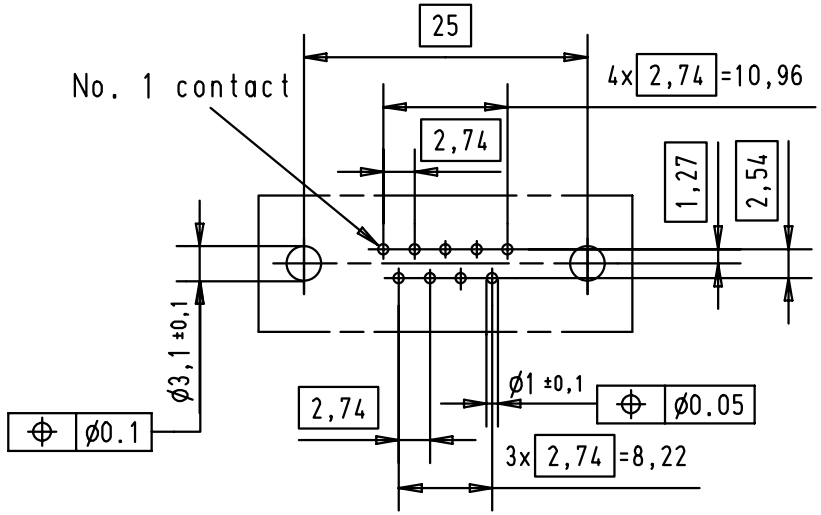

Mounting force on Printed board : 25 - 80 N

09 66 162 6810	ø3,1	2			
09 66 162 7810	ø3,1	3			
09 66 162 5810	ø3,1	0,76 µm Au	29725	26-OCT-01	JB
Part number	hole	Performance level	Mod.	Dat.	Name

	Dat.	Name
Detail.	26-OCT-01	JB
Insp.		
Stand.		

All Dim. in mm
Orig. Size DIN A 4

D-Sub male standard 9 poles with solder pins,ø3,1 holes, board lock and grounding pins

Maßstab/ *Scale* 1,5:1

HARTING EURL
F-95972 Paris

TB 09 66 162 X81X

Sub.

Blatt/ *Page* 2

Downloaded from Arrow.com.