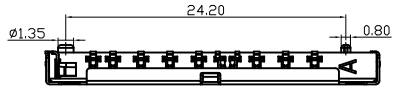

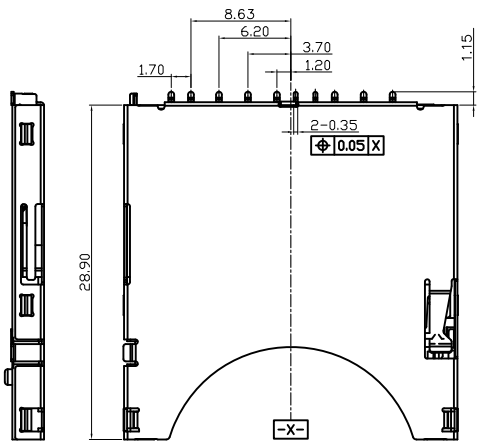

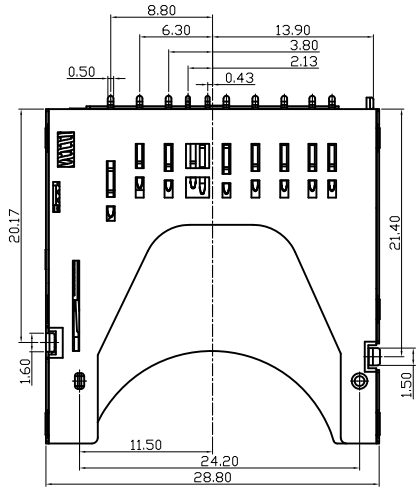

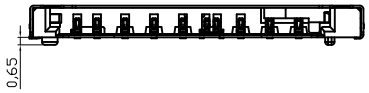

SPECIFICATION

MATERIAL
Insulator: Thermal Plastic UL94V-0, Black
Contacts: Copper Alloy
Shell: Stainless Steel
CONTACT PLATING
Underplate: 50u"~100U" Nickel
Contact Area: A-SD-09-C-A-1-3 :15u" Selective Gold
A-SD-09-D-A-1-3 :30u" Selective Gold
Solder Tails Area: 100u"~160u" Tin(Lead Free)

ELECTRICAL
Operation Voltage: 3.3 V
Current Rating: 0.5 A
Contact Resistance: 100 mohms Max.
Insulation Resistance: 1000 Mohms Min. @ 500 VDC
Dielectric Withstanding Voltage: 500 VAC / Minute
Temperature Range: -25°C To +90°C
Mating Cycles: 10,000 cycles, spring is not breaking.

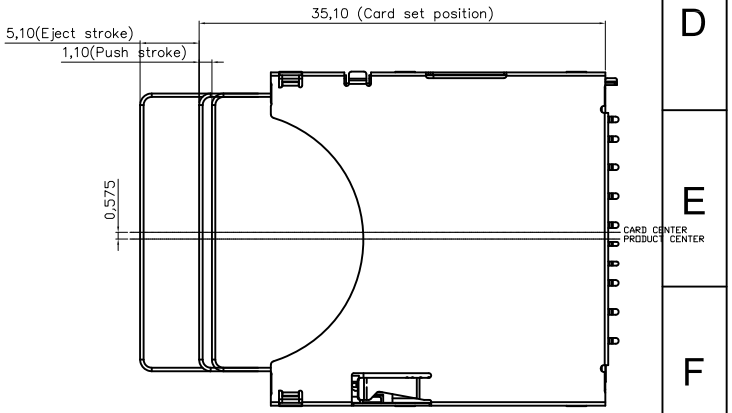

CIRCUIT:		
WP GROUND CD #3 WITHOUT CARD	WP GROUND CD #3 CARD INSERTED WRITE PROTECT : LOCK	WP GROUND CD #3 CARD INSERTED WRITE PROTECT : UNLOCK

RoHS compliant

Scale	1:1						Date	Name
TOLERANCE						Drawn	18.04.2007	Hellwig
X.	±0.50					Approved	15.07.2010	Hellwig
X.X	±0.30							
X.XX	±0.20	③	Update	15.07.2010	Rale			
DIM	TOL	②	Update	04.08.2009	Rale			
Angle	±5°	①	Drawn	18.04.2007	Hellwig			
Angle	TOL	Id.	Modification	Date	Name			

Customer-No.

ASSMANN WSW-No.
A-SD-09-x-A-1-3

Drawing-No.
ASS 2205 CO

rev03

Replace

SHEET
1 / 2

ASSMANN WSW components

SV205

Downloaded from Arrow.com.

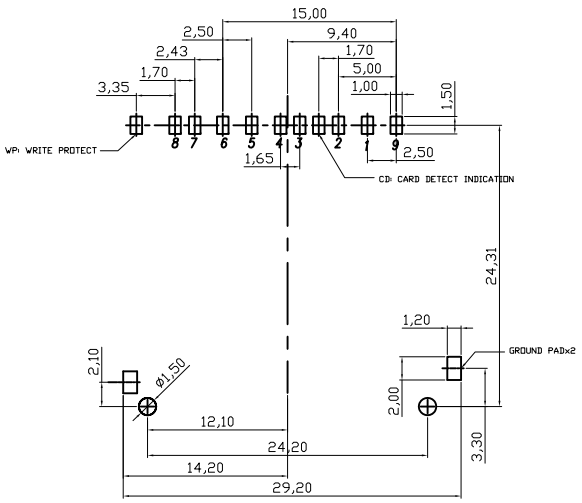

RECOMMENDED P.C.B. LAYOUT
TOLERANCE ± 0.05mm

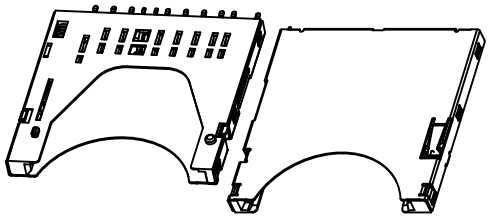

RoHS compliant

Scale	1:1						Date	Name
TOLERANCE						Drawn	18.04.2007	Hellwig
X.	±0.50							
X.X	±0.30					Approved	15.07.2010	Hellwig
X.XX	±0.20	③	Update	15.07.2009	Rale			
DIM	TOL	②	Update	04.08.2009	Rale			
Angle	±5°	①	Drawn	18.04.2007	Hellwig			
Angle	TOL	Id.	Modification	Date	Name			

Customer-No.

ASSMANN WSW-No.
A-SD-09-x-A-1-3

Drawing-No.
ASS 2205 CO

rev03

Replace

SHEET
2 / 2

SV205

Downloaded from Arrow.com.