MICRO SWITCH
A DIVISION OF MINNEAPOLIS-HONEYWELL REGULATOR COMPANY
FREEPORT, ILLINOIS

SWITCH - TOGGLE (MAGNETIC HOLD-IN)

CATALOG LISTING
25ET1-6

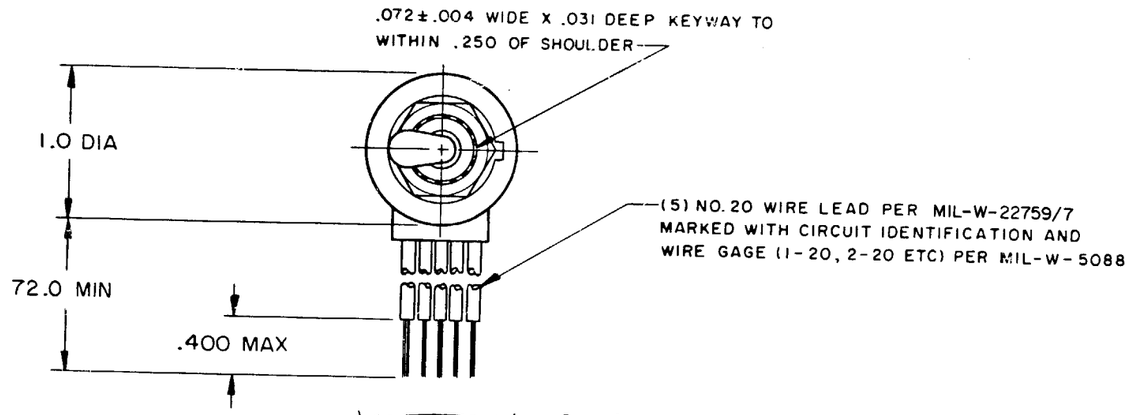

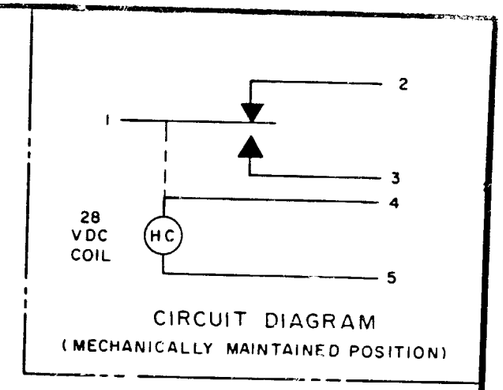

CIRCUIT DIAGRAM
(MECHANICALLY MAINTAINED POSITION)

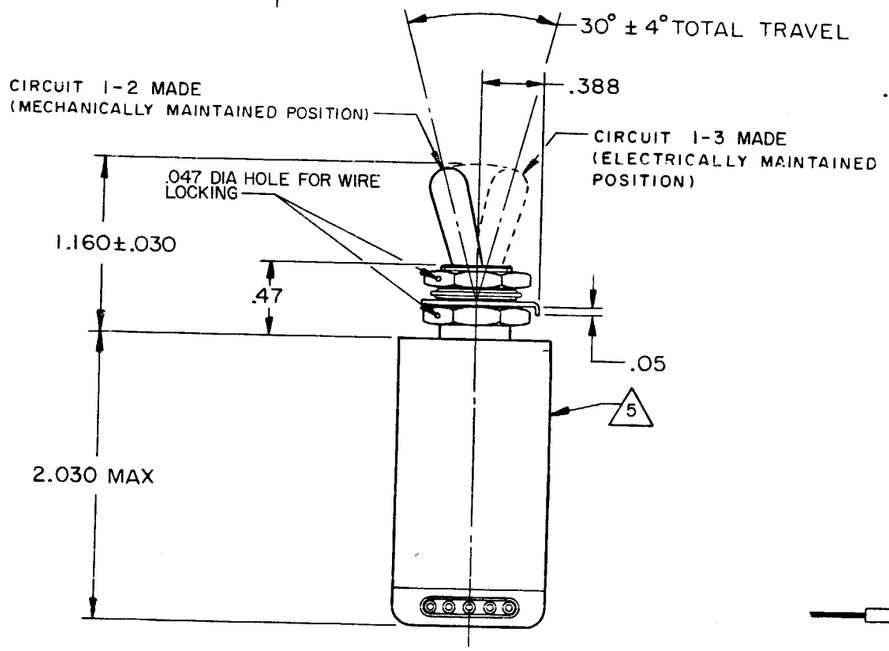

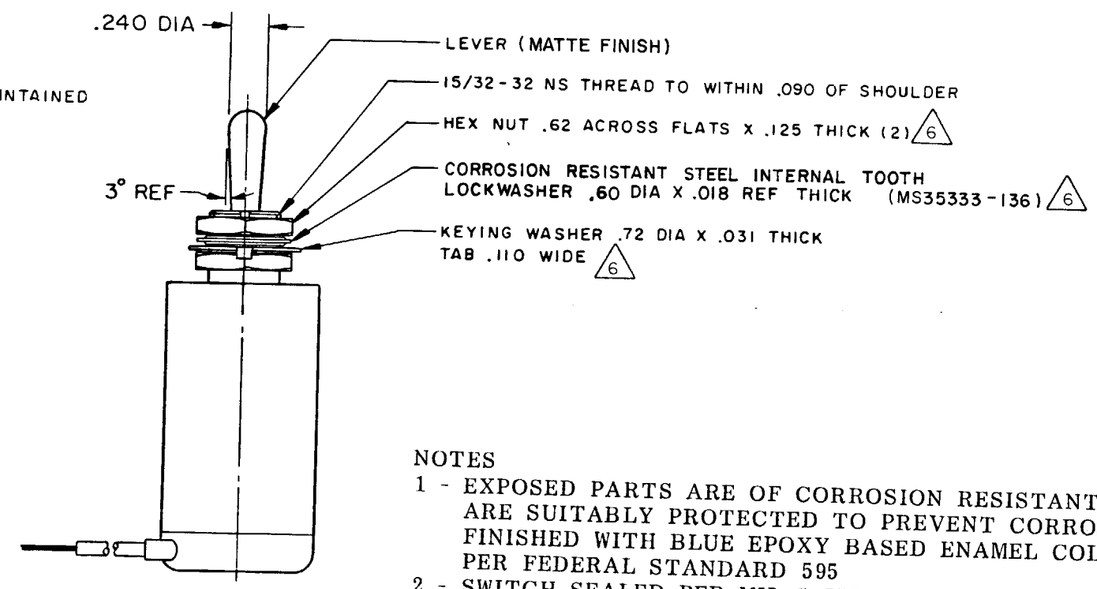

NOTES

1 - EXPOSED PARTS ARE OF CORROSION RESISTANT MATERIAL OR ARE SUITABLY PROTECTED TO PREVENT CORROSION. ENCLOSURE FINISHED WITH BLUE EPOXY BASED ENAMEL COLOR NO. 25184 PER FEDERAL STANDARD 595

2 - SWITCH SEALED PER MIL-S-5594

3 HOLD IN VOLTAGE: THE MINIMUM SPECIFIED VOLTAGE AT WHICH THE LEVER WILL REMAIN ACTUATED: HOLD IN MAY OCCUR AT A LOWER VALUE. DROP OUT VOLTAGE THE VOLTAGE RANGE IN WHICH THE LEVER WILL BE RELEASED

4 - CIRCUITS CAN BE TRANSFERRED MANUALLY. ENERGIZING THE COIL WILL NOT CAUSE TRANSFER OF CIRCUITS

5 CIRCUIT IDENTIFICATION IS SHOWN ON SWITCH

6 HARDWARE MAY BE FURNISHED UNASSEMBLED PER MIL-S-5594

THIS DRAWING COVERS A PROPRIETARY ITEM AND IS THE PROPERTY OF MICRO SWITCH, A DIVISION OF MINNEAPOLIS-HONEYWELL REGULATOR CO. THIS DRAWING IS NOT TO BE COPIED OR USED WITHOUT THE APPROVAL OF MICRO SWITCH.

CHARACTERISTICS 3

SOLENOID RATING AT 20° C

STEADY STATE LIMITS ------ 20-29 VDC

HOLD IN ---------- 10 VDC

DROP OUT ---------- 0-10 VDC

COIL RESISTANCE ------- 220 OHM MIN

OPERATING FORCE ------ 7 LBS MAX

OVERRIDE FOR AT 30 VDC --- 10 LBS MAX

ELECTRICAL DATA

CONTACT ARRANGEMENT: SPDT

VOLTAGE	RATING IN AMPERES							
	SEA LEVEL				65,000 FT			
	INRUSH	RES	IND	MOTOR	INRUSH	RES	IND	MOTOR
28 VOLTS DC		4	3	4		4	2.5	4

SCALE FULL

DO NOT SCALE PRINT

UNLESS OTHERWISE SPECIFIED
DIMENSIONS ARE IN INCHES

TOLERANCES ARE:

ONE PLACE	(.0)	±.030
TWO PLACE	(.00)	±.015
THREE PLACE	(.000)	±.005
ANGLES		±½°

WEIGHT 8.5 OZ MAX

25ET1-6 | REPLACES | RELEASE NO. PR-2240-T | DRAWING NUMBER M

REVISIONS

A	CO 50162	WJM 24 SEP 81	20 SEPT 71
B	C051725-E	RJH 25 JAN 83	CMA
C	CO 53402	DJS 14 APR 84	18 SEPT 71

DRAWN R C 8 SEPT 71 | CHECK | DAW | CHECK | CMA | CHECK

FO-50378-003

Downloaded from Arrow.com.