One-touch / Screw Mating Compatible
Circular Waterproof Connector

JL10 Series

CONNECTOR
MB-0263-9
Dec.2022

RoHS Compliant

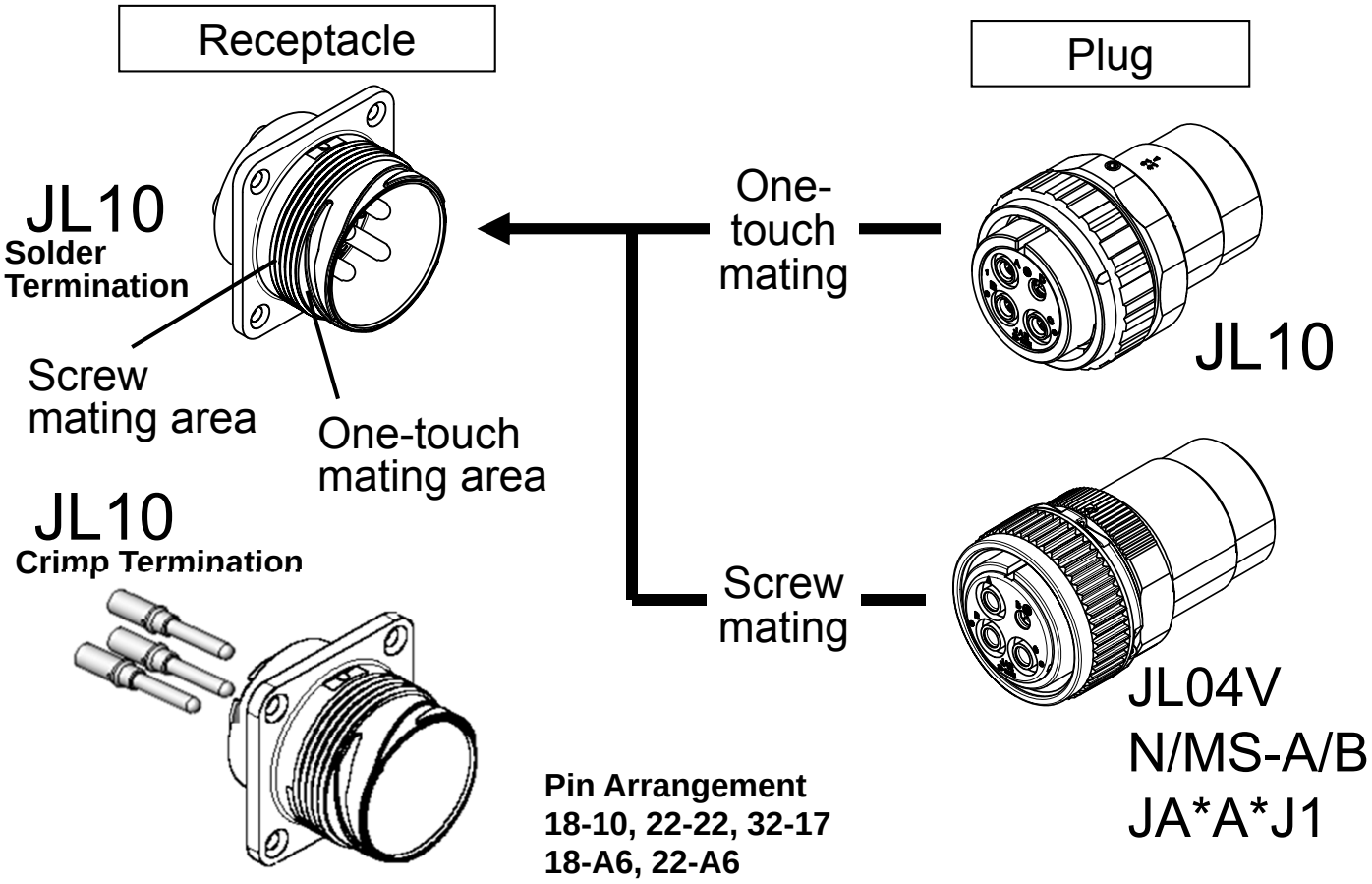

The JL10 Series are TUV approved and UL recognized, one-touch locking, circular, waterproof connectors for industrial machinery, satisfying European safety standards. The adopted Bayonet-style one-touch lock mechanism has a superior mating and unmating operability and the product contributes to an easy mating function.

The JL10 receptacle offers a hybrid, one-touch and threaded locking, dual function mating. The connector offers mating compatibility with conventional MIL standard, MS connectors and with our screw mating plugs (JL04V, N/MS, JA).

On top of the existing solder termination, a crimp termination option has been added to the 18-10, 22-22, 32-17, 18-A6 and 22-A6 pin arrangement receptacles. (18-A6, 22-A6 are of JAE-original contact arrangements and are not compatible with MIL-compliant products.)

Applicable Market

Industrial machineries, servo motors, robots, semiconductor-fabrication equipment, communication devices, measuring devices, broadcasting and various other equipment.

JAE Connector Div. Proprietary. Copyright © 2022 Japan Aviation Electronics Industry, Ltd.

Downloaded from Arrow.com.

Features

■Utilizes a one-touch bayonet lock style mating to allow secure mating even in narrow operating spaces or areas with poor visibility.
Superior connector operability improves mating and unmating function (reduced screw-down fastening, and eliminating torque control).

■JL10 Receptacle is a one-touch / screw mating hybrid type.
One-touch mating: When mated with JL10 plug
Screw mating: MIL-standard MS connector and our standard N/MS-A/B Series, JL04V Series, JA*A Series using J1 type plug.

■Receptacle's cable connection is available as soldering termination (for all receptacle) and crimp termination (for pin arrangements18-10, 22-22, 32-17, 18-A6 and 22-A6)

■Mating assurance confirmation through aligned guide mark (white arrows) of plug and receptacle.

■Low-profile compact design, and direction of the cable leader of angled type can be set in arbitrary 8 orientation in 45 degrees increments.

■Uses common cable clamp as for JL04V Series.

■UL recognized and TÜV approved product.

■IP67 waterproof and dustproof
For the receptacles there are individually waterproof (denoted as -2E) and waterproof in mated condition (denoted as -2A).

■Superior environmental performance against vibration and oil.

■The 18-A6 and 22-A6 contact arrangements are hybrid types with 4 power and 2 signal poles. Please note that these two products are JAE's original arrangements and are not compatible with MIL-DTL-5015 compliant products.

JAE Connector Div. Proprietary. Copyright © 2022 Japan Aviation Electronics Industry, Ltd.

Downloaded from Arrow.com.

Arrangements and General Specifications

Arrangement	18-10		20-4		20-18	
Contact Arrangement	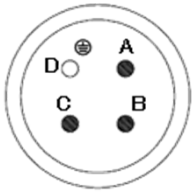		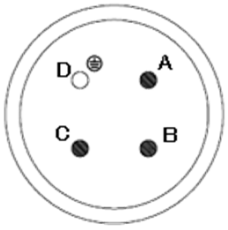			
Size x Number of Contact	#12 x 4		#12 x 4		#12 x 3	#16 x 6
Rated Current	23A / pos.		23A / pos.		23A / pos.	13A / pos.
Rated Voltage	250VAC	500VAC	250VAC	500VAC	250VAC	100VAC
Overvoltage Category	III	II	III	II	II	
Pollution Level	3	2	3	2	2	
Dielectric Withstanding Voltage	2000VAC (per minute)		2000VAC (per minute)		2000VAC (per minute)	
Insulation Resistance	1000MΩ min. (DC500V energized)		1000MΩ min. (DC500V energized)		1000MΩ min. (DC500V energized)	
Waterproof Performance	IP67		IP67		IP67	
Termination Method	Receptacle: Solder, crimp Plug: Solder		Solder		Solder	
Durability	500 times		500 times		500 times	

Arrangement	20-29	22-14	22-22	
Contact Arrangement	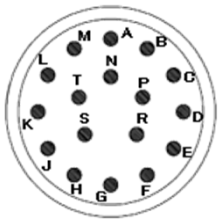	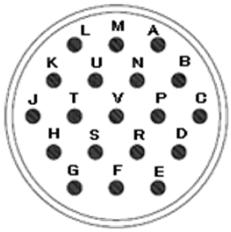	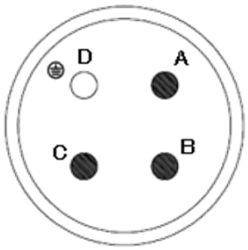	
Size x Number of Contact	#16 x 17	#16 x 19	#8 x 4	
Rated Current	13A / pos.	13A / pos.	46A, 57A (Note 1) / pos.	
Rated Voltage	500VAC	500VAC	250VAC	500VAC
Overvoltage Category	---	---	III	II
Pollution Level	---	---	3	2
Dielectric Withstanding Voltage	1000VAC (per minute)	1000VAC (per minute)	2000VAC (per minute)	
Insulation Resistance	1000MΩ min. (DC500V energized)	1000MΩ min. (DC500V energized)	1000MΩ min. (DC500V energized)	
Waterproof Performance	IP67	IP67	IP67	
Termination Method	Solder	Solder	Receptacle: Solder, crimp Plug: Solder	
Durability	500 times	500 times	500 times	

Note 1: Rated current when using 8mm^2 or 10mm^2 wire for arrangement 22-22 (Soldering Type).

JAE Connector Div. Proprietary. Copyright © 2022 Japan Aviation Electronics Industry, Ltd.

Downloaded from Arrow.com.

Arrangement	24-11		28-11		28-21
Contact Arrangement	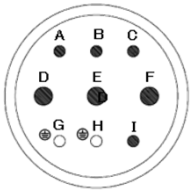		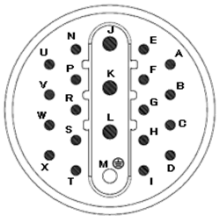		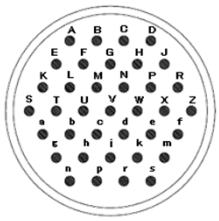
Size x Number of Contact	#8 x 3	#12 x 6	#12 x 4	#16 x 18	#16 x 37
Rated Current	46A / pos.	23A / pos.	23A / pos.	13A / pos.	13A / pos.
Rated Voltage	250VAC	500VAC	250VAC	100VAC	500VAC
Overvoltage Category	III	II	III		---
Pollution Level	3	2	2 (Note: mating area is 3)		---
Dielectric Withstanding Voltage	2000VAC (per minute)		2000VAC (per minute)		1000VAC (per minute)
Insulation Resistance	1000MΩ min. (DC500V energized)		1000MΩ min. (DC500V energized)		1000MΩ min. (DC500V energized)
Waterproof Performance	IP67		IP67		IP67
Termination Method	Soldering		Soldering		Soldering
Durability	500 times		500 times		500 times

Arrangement	32-17		18-A6		22-A6	
Contact Arrangement	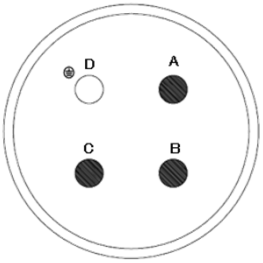		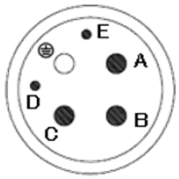		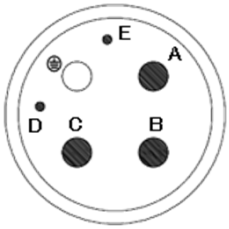	
Size x No. of Contact	#4 x 4		#12×4	#20×2	#8×4	#20×2
Rated Current	80A / pos.		23A / pos.	1A / pos.	46 A / pos.	1 A / pos.
Rated Voltage	250VAC	500VAC	250VAC	48VAC	250VAC	48VAC
Overvoltage Category	III	II	II		II	
Pollution Level	3	2	3		3	
Dielectric Withstanding Voltage	2000VAC (per minute)		2000VAC	500VAC	2000VAC	500VAC
Insulation Resistance	1000MΩ min. (DC500V energized)		1000MΩ min. (DC500V energized)		1000MΩ min. (DC500V energized)	
Waterproof Performance	IP67		IP67		IP67	
Termination Method	Receptacle: Crimping Plug: Soldering		Receptacle: Crimping Plug: Soldering		Receptacle: Crimping Plug: Soldering	
Durability	500 times		500 times		500 times	

JAE Connector Div. Proprietary. Copyright © 2022 Japan Aviation Electronics Industry, Ltd.

Downloaded from Arrow.com.

	Components	Material / Finish
Receptacle (Solder)	Contact	Copper alloy / silver plating
	Ground / Earth Pin	Copper alloy / nickel plating
	Front Insulator	Silicone rubber
	Rear Insulator	Synthetic resin
	Shell	Aluminum alloy / zinc plating
	Retaining Ring	Copper alloy / zinc plating
Receptacle: (Crimp)	Contact (Ground / Earth)	Copper alloy / silver plating
	Ground / Earth Pin	Copper alloy / nickel plating
	Front Insulator	Synthetic resin
	Center Insulator	Silicone rubber
	Rear Insulator	Synthetic resin
	Shell	Aluminum alloy / zinc plating
	Retaining Ring	Copper alloy / zinc plating
Receptacle Crimp Contact	Contact	Copper alloy / silver plating
Individual Plug	Set Screw	Steel / zinc plating
	O Ring	Synthetic rubber
	Retaining Ring	Copper alloy / zinc plating
	Wave Spring	Stainless Steel
	C Type Ring	Stainless Steel
	Contact	Copper alloy / silver plating
	Front Insulator	Synthetic resin
	Rear Insulator	Synthetic resin
	Assembly Nut	Aluminum alloy / zinc plating
	Coupling Nut	Aluminum alloy / zinc plating
	Barrel	Aluminum alloy / zinc plating
Straight Plug Angle Plug	Endbell	Aluminum alloy / zinc plating
	Set Screw	Steel / zinc plating
	O Ring	Synthetic rubber
	Retaining Ring	Copper alloy / zinc plating
	Wave Spring	Stainless Steel
	C Type Ring	Stainless Steel
	Contact	Copper alloy / silver plating
	Front Insulator	Synthetic resin
	Rear Insulator	Synthetic resin
	Assembly Nut	Aluminum alloy / zinc plating
	Coupling Nut	Aluminum alloy / zinc plating
	Barrel	Aluminum alloy / zinc plating

JAE Connector Div. Proprietary. Copyright © 2022 Japan Aviation Electronics Industry, Ltd.

Downloaded from Arrow.com.

Line-up and Combinations

Receptacle Side	Plug Side		
	One-touch Mating	Screw Mating	Accessory

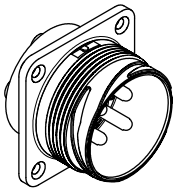

●Panel Mount Type
JL10-2E
-2A types
(Solder Type)

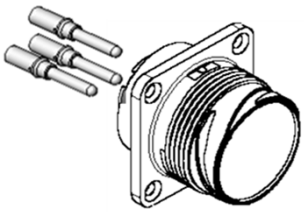

● Panel Mount Type
JL10-2E type
(Crimp Type)
Pin Arrangement
18-10, 22-22, 32-17,
18-A6, 22-A6

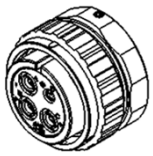

●Individual Plug
JL10-6A type

●Individual Plug
JL04V-6A type

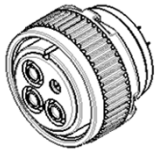

Conduit
(Note 1)

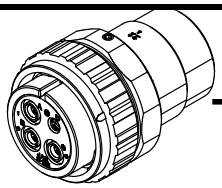

●Straight Plug
JL10-6A-EB type

●Straight Plug
JL04V-6A-EB type

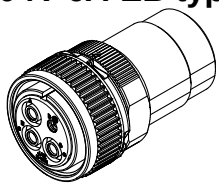

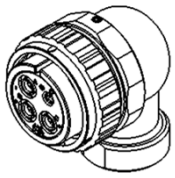

●Angle Plug
JL10-8A-EB/EB1 type

●Angle Plug
JL04V-8A-
EB / EB1 / EBA type

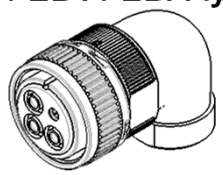

Conduit
(Note 1)

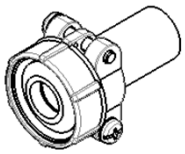

●Cable Clamp
JL04-CK type

●JA*A*J1 Type

●N/MS-A/B Type
(non-waterproof) (Note 3)

Note 1) Please contact us or conduit manufacturer for detailed use of a conduit.
Note 2) Please refer to individual catalogs for consideration of JL04V Series, N/MS-A/B Series, and J1 type JA*A Series.
Note 3) Becomes non-waterproof when mated with N/MS-A/B type plug.

JAE Connector Div. Proprietary. Copyright © 2022 Japan Aviation Electronics Industry, Ltd.

Downloaded from Arrow.com.

Ordering Information

Receptacle

JL10 – 2 E 22 - 22 P* E * - *

Series

Connector Type
2: Panel mount type receptacle

E: Waterproof (individually)
A: Waterproof (when mated)

Shell Size

Insert Arrangement

Contact Type
P: Pin (Soldering)
S: Socket (Soldering)
PC: Pin (Crimp)

E: With protective earth terminal
None: Without protective earth terminal

Insert Rotation Position
None: Normal position
W: W position
X: X position
Y: Y position
Z: Z position

*Please contact JAE for products requiring non-standard insert position.

Modification Code

None: without solder-cup on earth contact
B: with solder-cup on earth contact

Plug

JL10 - 6 A 22 - 22 S E * - *

Series

Connector Type
6: Straight plug
8: Right angle plug

A: Waterproof in mated part

Shell Size

Insert Arrangement

Contact type
P: Pin (Soldering)
S: Socket (Soldering)

E: With protective earth terminal
None: Without protective earth terminal

Insert Rotation Position
None: Normal position
W: W position
X: X position
Y: Y position
Z: Z position

*Please contact JAE for products requiring non-standard insert position.

None: Single block
EB: With Endbell
EB1: With Endbell with enlarged cable entry

JAE Connector Div. Proprietary. Copyright © 2022 Japan Aviation Electronics Industry, Ltd.

Downloaded from Arrow.com.

Receptacle (Solder)

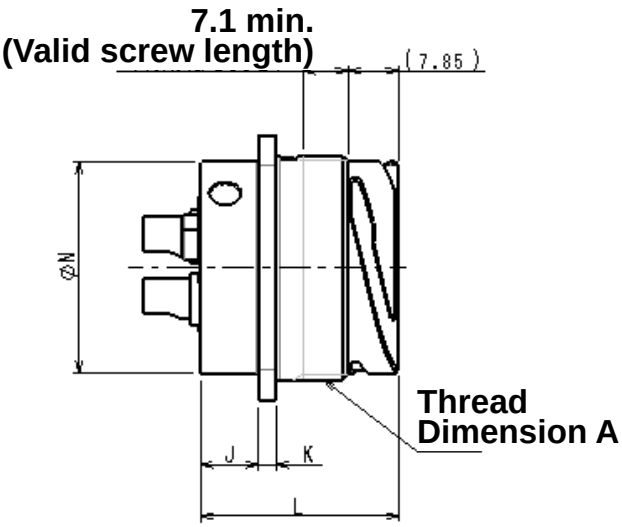

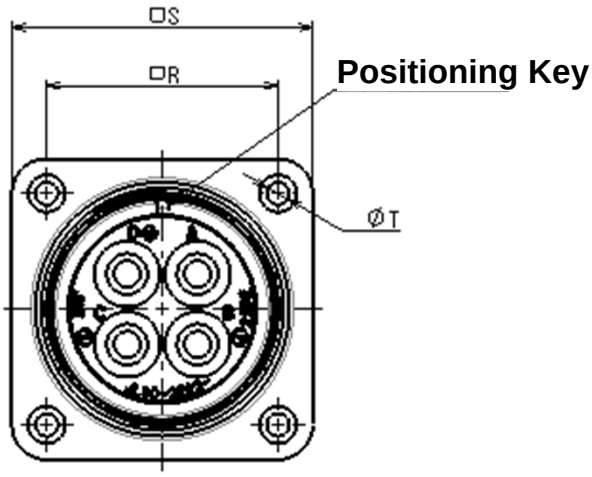

Shell Size	Thread Dimension A	K ±0.3	J ±0.3	L ±0.3	φN +0 -0.4	□R ±0.13	□S ±0.79	φT +0.2 -0.1
18	1 1/8-18UNEF-2A	2.7	8.25	30	27	26.97	34.9	3.1
20	1 1/4-18UNEF-2A	2.7	7.05	28.8	26.9	29.36	38.1	3.1
22	1 3/8-18UNEF-2A	2.7	9.1	30.85	33	31.75	41.3	3.1
24	1 1/2 -18UNEF-2A	2.7	9.1	32.45	36	34.92	44.4	3.73
28	1 3/4 -18UNES-2A	2.7	9.38	32.7	41.5	39.67	50.8	3.73

Receptacle (Crimp)

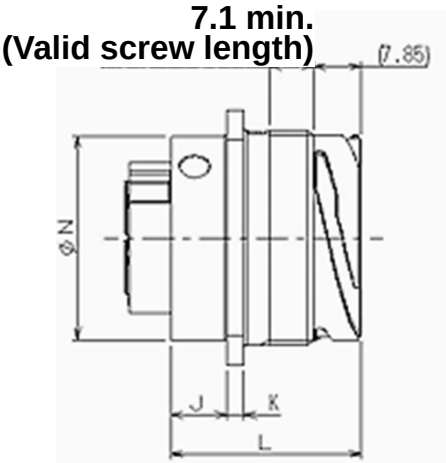

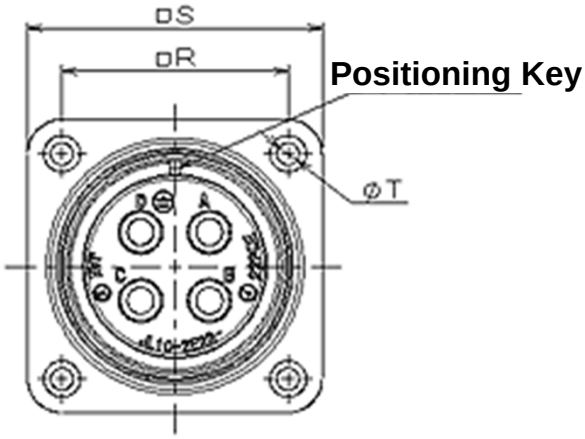

Shell Size	Thread Dimension A	K ±0.3	J ±0.3	L ±0.3	φN 0 -0.4	□R ±0.13	□S ±0.79	φT +0.2 -0.1
18	1 1/8-18UNEF-2A	2.7	8.25	30	27	26.97	34.9	3.1
22	1 3/8-18UNEF-2A	2.7	9.1	30.85	33	31.75	41.3	3.1

Shell Size	Thread Dimension A	K ±0.3	J ±0.6 -1	L ±0.4	φN 0 -0.4	□R ±0.13	□S ±0.79	φT +0.2 -0.1
32	2-18UNS-2A	4	6.45	32.7	47.85	44.45	57.2	4.4

JAE Connector Div. Proprietary. Copyright © 2022 Japan Aviation Electronics Industry, Ltd.

Downloaded from Arrow.com.

Crimp Contact Dimensions

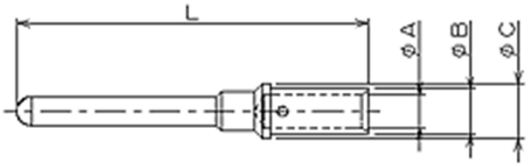

Contact Size	Applicable Crimp Contact	L ±0.5	A ±0.2	B ±0.2	C ±0.2
#20	CONT-JL10-20P-C1-PKG100	20.7	φ1.13	φ1.84	φ2.5
#12	CONT-JL10-12P-C1-PKG100	28.65	φ2.77	φ3.77	φ4.57
	CONT-JL10-12P-C2-PKG100	28.65	φ2.1	φ2.9	φ4.57
	CONT-JL10-12P-C2-1-PKG100	28.65	φ2.1	φ2.9	φ3.77
#8	CONT-JL10-08P-C1-PKG100	32.85	φ4.3	φ5.6	φ6.5
	CONT-JL10-08P-C2-PKG100	32.85	φ3.5	φ4.5	φ6.5
	CONT-JL10-08P-C3-PKG100	32.85	φ2.77	φ3.77	φ6.5
#4	CONT-JL10-04P-C1-PKG100	42.9	φ7.18	φ9.53	φ10.9
	CONT-JL10-04P-C2-PKG100	42.9	φ4.61	φ6.76	φ10.9

Crimp Contact and Cable Sizes

Inset Arrangement	Contact Size	Applicable Crimp Contact	Applicable Cable Size
18-10	#12	CONT-JL10-12P-C1-PKG100	#12~#14 AWG
		CONT-JL10-12P-C2-PKG100	#14～#18 AWG
22-22	#8	CONT-JL10-08P-C1-PKG100	#8～#10 AWG
		CONT-JL10-08P-C2-PKG100	#10～#12 AWG
		CONT-JL10-08P-C3-PKG100	#12～#14 AWG
32-17	#4	CONT-JL10-04P-C1-PKG100	#4 AWG
		CONT-JL10-04P-C2-PKG100	#8～#10 AWG
18-A6	#12	CONT-JL10-12P-C1-PKG100	#14 AWG
	#20	CONT-JL10-20P-C1-PKG100	#20～#22 AWG
22-A6	#8	CONT-JL10-08P-C1-PKG100	#8～#10 AWG
		CONT-JL10-08P-C2-PKG100	#10～#12 AWG
		CONT-JL10-08P-C3-PKG100	#12～#14 AWG
	#20	CONT-JL10-20P-C1-PKG100	#20～#22 AWG

*Please refer to Crimp Tool Handling Instructions for details of applicable cables.

JAE Connector Div. Proprietary. Copyright © 2022 Japan Aviation Electronics Industry, Ltd.

Downloaded from Arrow.com.

Individual Plug

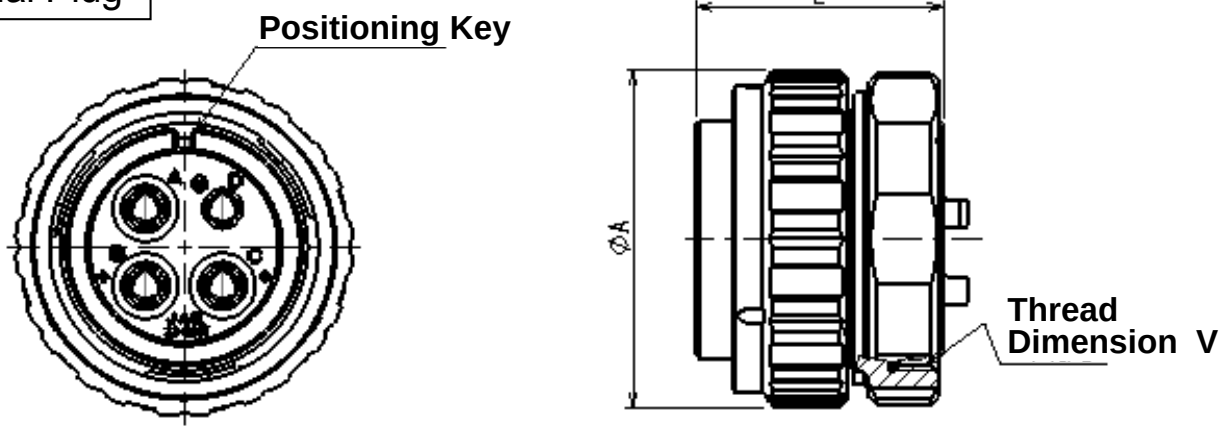

Shell Size	φA ±0.8	L	Thread Dimension V
18	35.85	30	1 3/16-18UNEF-2B
20	40.5	31	1 3/8-18UNEF-2B
22	42.2	31	1 7/16-18UNEF-2B
24	45.5	31	1 9/16-18UNEF-2B
28	51.5	26.3	1 13/16-18UNS-2B
32	58.6	31.2	2 1/8-16UN-2B

JAE Connector Div. Proprietary. Copyright © 2022 Japan Aviation Electronics Industry, Ltd.

Downloaded from Arrow.com.

Straight Plug

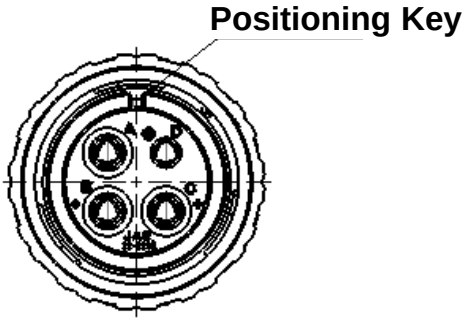

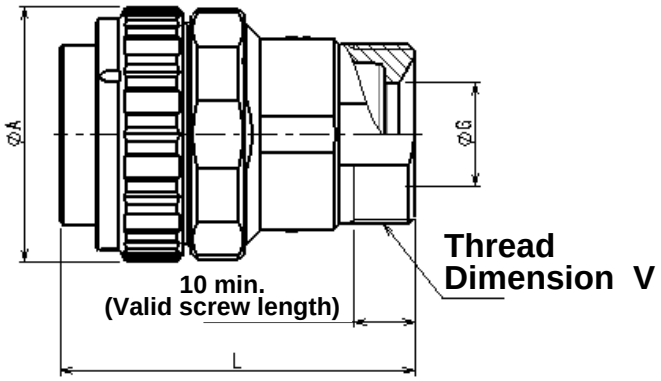

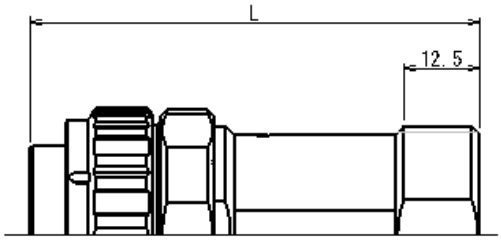

For reference:
in case of 22-22SE-EB1

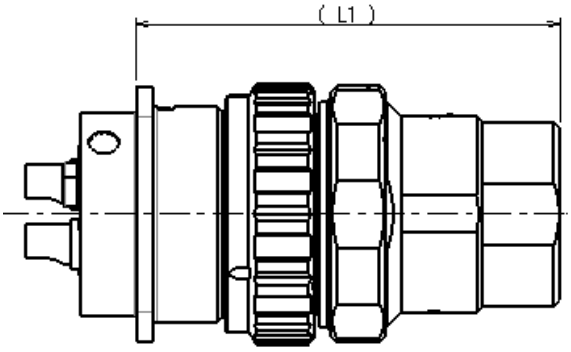

For reference:
in case of 22-22SE-EB

Shell Size	φA ±0.8	φG ±0.5	L ±0.8	(L1)	Thread Dimension V
18	35.85	15	51.05	60.6	1-20UNEF-2A
20	40.5	17	52.1	61.9	1 3/16-18UNEF-2A
22	42.2	17	58.65	68.5	1 3/16-18UNEF-2A
24	45.5	20	65.81	76.2	1 7/16-18UNEF-2A
28	51.5	20	70.0	75.5	1 7/16-18UNEF-2A
32	58.6	30	99.6	114.2	1 3/4-18UNS-2A

22SE-EB1	42.2	22	74.35	84.15	1 7/16-18UNEF-2A

JAE Connector Div. Proprietary. Copyright © 2022 Japan Aviation Electronics Industry, Ltd.

Downloaded from Arrow.com.

Angle Plug

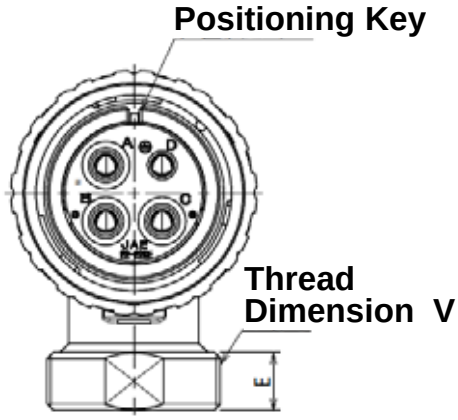

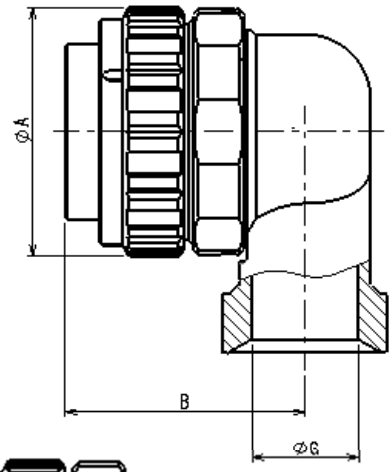

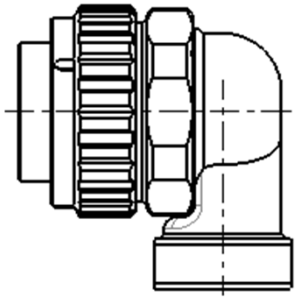

For reference:
in case of 18-10SE-EB

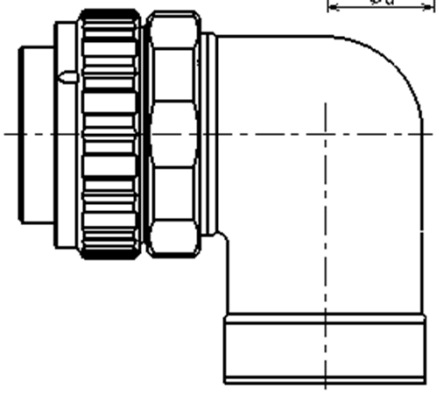

For reference:
in case of 22-22SE-EB1

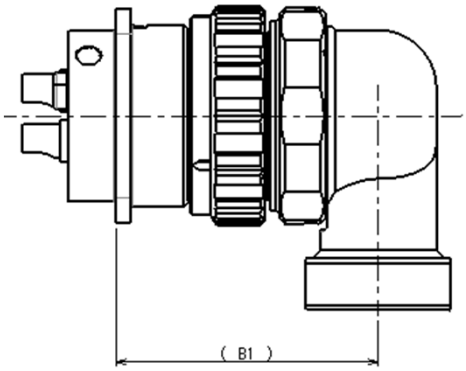

For reference:
in case of 22-22SE-EB

Shell Size	φA ±0.8	B ±0.8	(B1)	E ±0.5	φG ±0.5	Thread Dimension V
18	35.85	34.55	44.4	8.5	16	1-20UNEF-2A
20	40.5	54.3	64.1	10	17	1 3/16-18UNEF-2A
22	42.2	40.65	50.45	10	18	1 3/16-18UNEF-2A
24	45.5	59.76	70.2	10	20	1 7/16-18UNEF-2A
28	51.5	64.0	69.4	10	20	1 7/16-18UNEF-2A
32	58.6	66.9	81.2	10	30	1 3/4-18UNS-2A

22SE-EB1	42.2	51.6	61.4	10	22	1 7/16-18UNEF-2A

JAE Connector Div. Proprietary. Copyright © 2022 Japan Aviation Electronics Industry, Ltd.

Downloaded from Arrow.com.

Accessory: Cable Clamp (Sold separately)

Cable clamp is the same as used with our JL04V Series.

Shell Size	Product Name	Applicable Cable O.D.
18	JL04-18CK(07)-*-RK	φ5 to φ8
18	JL04-18CK(13)-*-R	φ11 to φ14.1
20, 22	JL04-2022CK(09)-*-R	φ6.5 to φ9.5
20, 22	JL04-2022CK(12)-*-R	φ9.5 to φ13
20, 22	JL04-2022CK(14)-*-R	φ12.9 to φ16
24, 28, 22-22EB1	JL04-2428CK(11)-*-RK	φ9 to φ12
24, 28, 22-22EB1	JL04-2428CK(14)-*-RK	φ12 to φ15
24, 28, 22-22EB1	JL04-2428CK(17)-*-R	φ15 to φ18
24, 28, 22-22EB1	JL04-2428CK(20)-*-RK	φ18 to φ20
32	JL04-32CK(24)-*-RK	φ22 to φ25

For Reference: Panel Mount Dimensions

(1) Front mount: Receptacle is attached to the front side of the panel and enclosure.
Cable termination side will be inside when attached.
(2) Rear mount: Receptacle is attached to the back side of the panel and enclosure.
Please be aware of the panel thickness when concerning this product.

* Mounting dimensions are the same as our JL04V Series.

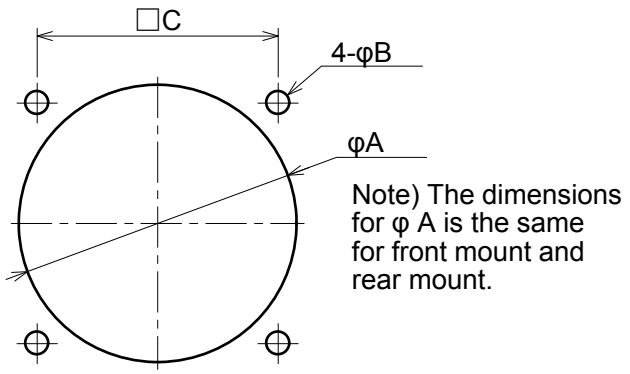

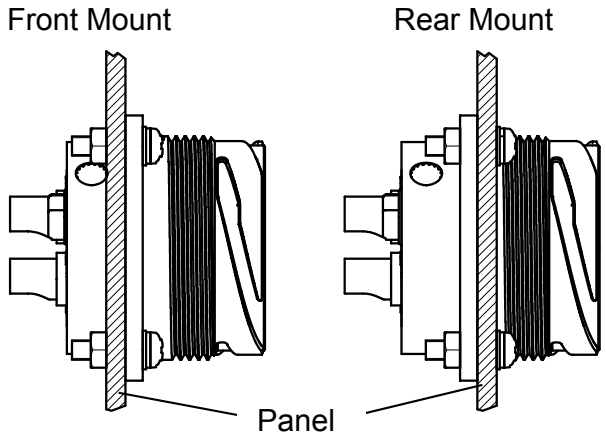

Shell Size	φA ±0.5	φB	□C±0.13	Mounting Screw (for reference)		Max. Panel Thickness for Rear Mount
				Metric screw thread	Unified screw thread	
18	30.2	3.3	26.97	M 3	#4-40	3mm max.
20	33.4	3.3	29.36	M 3	#4-40	3mm max.
22	36.6	3.3	31.75	M 3	#4-40	3mm max.
24	39.7	3.8	34.92	M 3.5	#6-32	4mm max.
28	46.1	3.8	39.67	M 3.5	#6-32	4mm max.
32	52.4	4.4	44.45	M 4	#8-32	6mm max.

JAE Connector Div. Proprietary. Copyright © 2022 Japan Aviation Electronics Industry, Ltd.

Downloaded from Arrow.com.

Accessory: Gasket (Sold separately)

There is a gasket to prevent water ingress from the panel hole (main body) of the enclosure when receptacle is mounted to the panel / enclosure. The gaskets are the same as ones used for our JL04V Series.
Note 1) Beside the use of a gasket, there is a need for countermeasure to prevent water immersion from the screw holes. Each user to prepare countermeasure.

Shell Size	Gasket No.	SJ Drawing
18	075-50157	SJ009289
20	075-50158	SJ009289
22	075-50159	SJ009289
24	075-50160	SJ009289
28	075-50161	SJ009289
32	075-50162	SJ009289

JAE Connector Div. Proprietary. Copyright © 2022 Japan Aviation Electronics Industry, Ltd.

Downloaded from Arrow.com.

Part Number and Product Drawing List

Contact Arrangement	Receptacle Part Number	Receptacle Product Drawing Number	Plug Part Number	Plug Product Drawing Number
18-10	JL10-2E18-10PE-B JL10-2E18-10PE JL10-2E18-10PCE-B (Crimp) JL10-2E18-10PCE (Crimp)	SJ116011 SJ112315 SJ116012 SJ114710	JL10-6A18-10SE	SJ112323
			JL10-6A18-10SE-EB	SJ112322
			JL10-8A18-10SE-EB	SJ112321
20-18	JL10-2E20-18PE-B	SJ115406	JL10-6A20-18SE	SJ115407
			JL10-6A20-18SE-EB	SJ115408
			JL10-8A20-18SE-EB	SJ115409
20-4	JL10-2E20-4PE-B	SJ115402	JL10-6A20-4SE	SJ115403
			JL10-6A20-4SE-EB	SJ115404
			JL10-8A20-4SE-EB	SJ115405
20-29	JL10-2A20-29P	SJ115410	JL10-6A20-29S	SJ115411
			JL10-6A20-29S-EB	SJ115412
			JL10-8A20-29S-EB	SJ115413
	JL10-2A20-29S	SJ117463	JL10-6A20-29P	SJ117466
			JL10-6A20-29P-EB	SJ117467
			JL10-8A20-29P-EB	SJ117470
22-14	JL10-2A22-14P	SJ115414	JL10-6A22-14S-EB	SJ115415
			JL10-8A22-14S-EB	SJ115416
	JL10-2A22-14S	SJ115417	JL10-6A22-14P-EB	SJ115418
			JL10-8A22-14P-EB	SJ115419
22-22	JL10-2E22-22PE-B JL10-2E22-22PE JL10-2E22-22PCE-B (Crimp) JL10-2E22-22PCE (Crimp)	SJ115881 SJ112313 SJ116010 SJ114709	JL10-6A22-22SE	SJ112320
			JL10-6A22-22SE-EB	SJ112317
			JL10-6A22-22SE-EB1	SJ112319
			JL10-8A22-22SE-EB	SJ112316
			JL10-8A22-22SE-EB1	SJ112318
	JL10-2A22-22SE	SJ114872	JL10-6A22-22PE-EB	SJ117517
			JL10-8A22-22PE-EB	SJ114873
24-11	JL10-2E24-11PE-B	SJ115420	JL10-6A24-11SE	SJ115421
			JL10-6A24-11SE-EB	SJ115422
			JL10-8A24-11SE-EB	SJ115423
28-11	JL10-2A28-11SE-B	SJ117434	JL10-6A28-11PE	SJ117436
			JL10-6A28-11PE-EB	SJ117438
			JL10-8A28-11PE-EB	SJ117441
28-21	JL10-2A28-21S	SJ117443	JL10-6A28-21P	SJ117444
			JL10-6A28-21P-EB	SJ117445
			JL10-8A28-21P-EB	SJ117446
32-17	JL10-2E32-17PCE-B (Crimp)	SJ115424	JL10-6A32-17SE	SJ115425
			JL10-6A32-17SE-EB	SJ115426
			JL10-8A32-17SE-EB	SJ115427

JAE Connector Div. Proprietary. Copyright © 2022 Japan Aviation Electronics Industry, Ltd.

Downloaded from Arrow.com.

Part Number and Product Drawing List

Contact Arrangement	Receptacle Part Number	Receptacle Product Drawing Number	Plug Part Number	Plug Product Drawing Number
18-A6	JL10-2E18-A6PCE (Crimp)	SJ119064	JL10-6A18-A6SE-EB	SJ121790
			JL10-8A18-A6SE-EB	SJ119065
22-A6	JL10-2E22-A6PCE (Crimp)	SJ119066	JL10-6A22-A6SE-EB	SJ121791
			JL10-8A22-A6SE-EB	SJ119067

JAE Connector Div. Proprietary. Copyright © 2022 Japan Aviation Electronics Industry, Ltd.

Downloaded from Arrow.com.

Crimp Contact Part Number / Drawing Number List

Contact Size	Contact Part Number	Drawing Number
#20	CONT-JL10-20P-C1-PKG100	SJ119110
#12	CONT-JL10-12P-C1-PKG100	SJ114746
	CONT-JL10-12P-C2-PKG100	SJ114747
	CONT-JL10-12P-C2-1-PKG100	SJ119109
#8	CONT-JL10-08P-C1-PKG100	SJ114743
	CONT-JL10-08P-C2-PKG100	SJ114744
	CONT-JL10-08P-C3-PKG100	SJ114745
#4	CONT-JL10-04P-C1-PKG100	SJ116737
	CONT-JL10-04P-C2-PKG100	SJ116738

*For crimp type, receptacle and contacts are sold separately.

Tool

(1) Crimp Tool

Contact Size	Tool Type	Applicable Crimp Tool	Tool Handling Instructions
#20	Manual Tool	M22520/2-01 JP-JL10-20P	T72-17-M –
#12	Manual Tool	M22520/1-01 JP2-JL10-1	T700161 T706199
		CT160-16-UNI	T700355 T700355-01
#8	Manual Tool	CT160-16-UNI	T700355 T700355-01
#4	Manual Tool	CT299-*-JL10-4 (Note 1)	T702140-01 T702140-02

Note 1) Please Refer to Tool Handling Instructions for details of all Applicable Crimp Tools (Including crimp tools with an asterisks within the part number.)

(2) Contact Extraction Tool

Contact Size	Extraction Tool	Tool Handling Instructions	Applicable Cable Diameter
#20	ET-JL10-20-1	T711211	φ1.94max.
#12	ET-JL10-12-1	T711196	φ3.85max.
	ET-JL10-12-2	T711241	φ2.9max.
#8	ET-JL10-8-1	T711197	φ5.65max.
#4	ET-JL10-4-1	T711239	φ9.4max.

Specifications:
JACS-50101: Solder and crimp terminations

Handling Instructions:
JAHL-50101: Solder termination, JAHL-50101-2: Crimp termination

JAE Connector Div. Proprietary. Copyright © 2022 Japan Aviation Electronics Industry, Ltd.

Downloaded from Arrow.com.

Cautions

JL10 Caution 1

Please note that JL10 plug will not mate with JL04V receptacle.

	Receptacle	Plug	Mating
Combinations	**JL04V**	**JL10**	**Will not mate**
	JL04V	JL04V	Mateable
	JL10	JL04V	Mateable
	JL10	JL10	Mateable

JL10 Caution 2

When using JL10 receptacle and JL04 plug mating and unmating operation will be in steps shown below.

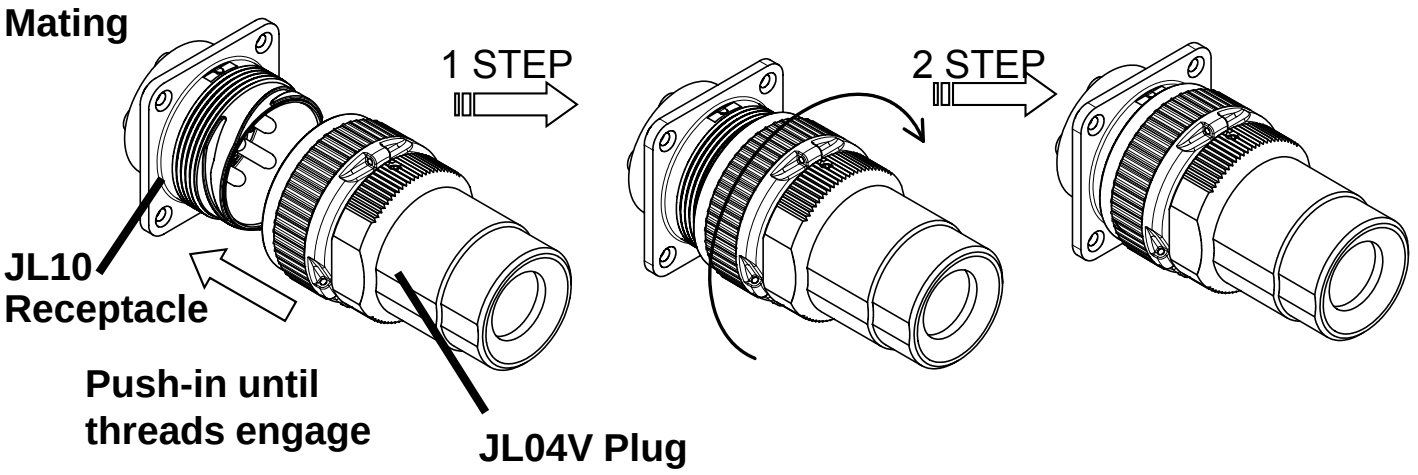

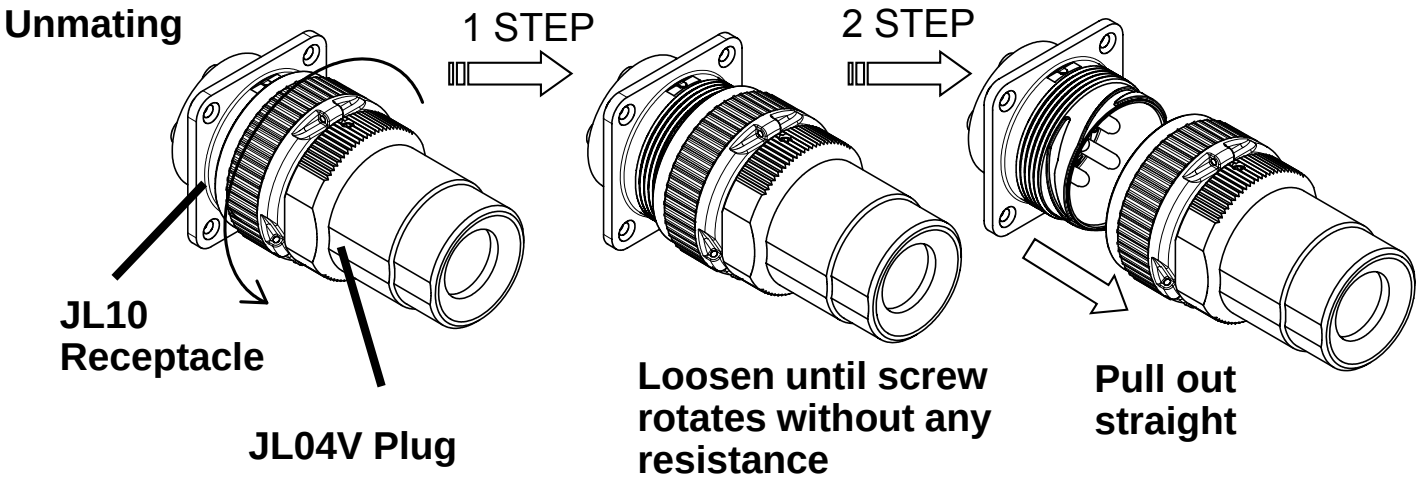

JAE Connector Div. Proprietary. Copyright © 2022 Japan Aviation Electronics Industry, Ltd.

Downloaded from Arrow.com.

Notice:

1. The values specified in this brochure are only for reference. The products and their specifications are subject to change without notice. Contact our sales staff for further information before considering or ordering any of our products.
For purchase, a product specification must be agreed upon.

2. Users are requested to provide protection circuits and redundancy circuits to ensure safety of the equipment, and sufficiently review the suitability of JAE's products to the equipment.

3. The products presented in this brochure are designed for the uses recommended below.
We strongly suggest you contact our sales staff when considering use of any of the products in any other way than the recommended applications or for a specific use that requires an extremely high reliability.

(1) Applications that require consultation:
(i) Please contact us if you are considering use involving a quality assurance program that you specify or that is peculiar to the industry, such as:
Automotive electrical components, train control, telecommunications devices (mainline), traffic light control, electric power, combustion control, fire prevention or security systems, disaster prevention equipment, etc.
(ii) We may separately give you our support with a quality assurance program that
you specify, when you think of a use such as :
Aviation or space equipment, submarine repeaters, nuclear power control systems, medical equipment for life support, etc.

(2) Recommended applications include:
Computers, office appliances, telecommunications devices (terminals, mobile units), measuring equipment, audiovisual equipment, home electric appliances, factory automation equipment, etc.

Japan Aviation Electronics Industry, Limited

* The specifications in this brochure are subject to change without notice. Please contact JAE for information.

JAE Connector Div. Proprietary. Copyright © 2022 Japan Aviation Electronics Industry, Ltd.

Downloaded from Arrow.com.