Data Sheet | Item Number: 750-504/025-000

4-channel digital output; 24 VDC; 0.5 A; Ext. Temperature

https://www.wago.com/750-504/025-000

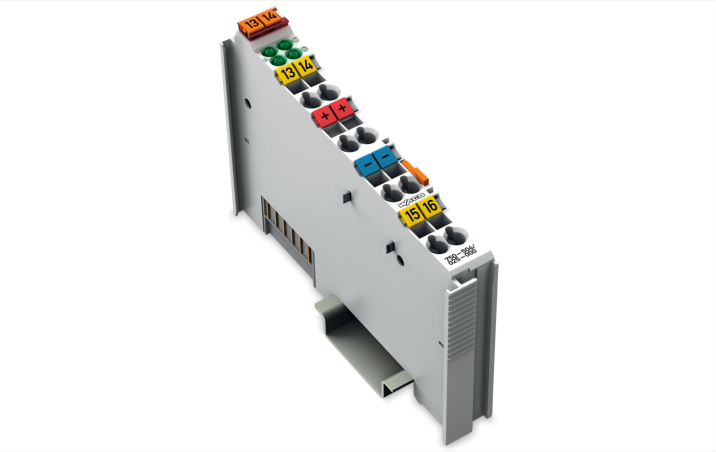

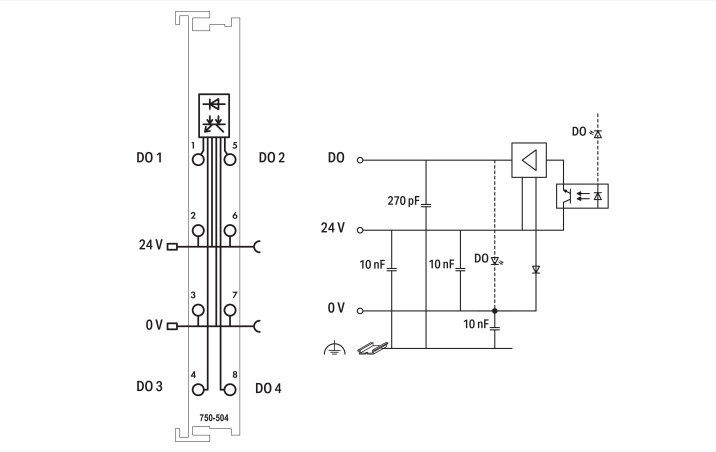

Color: light gray

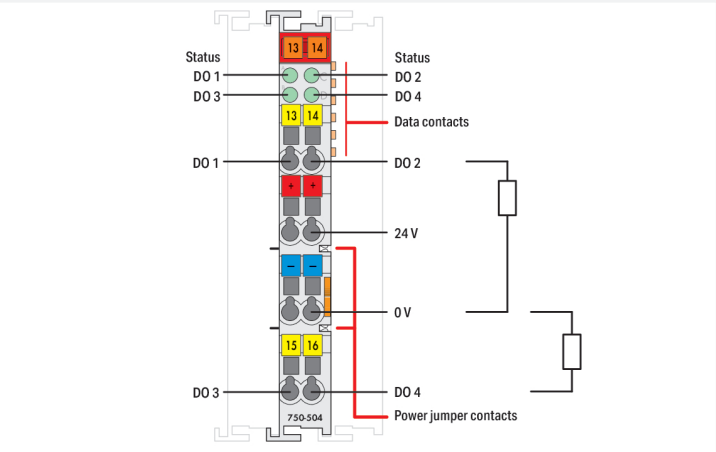

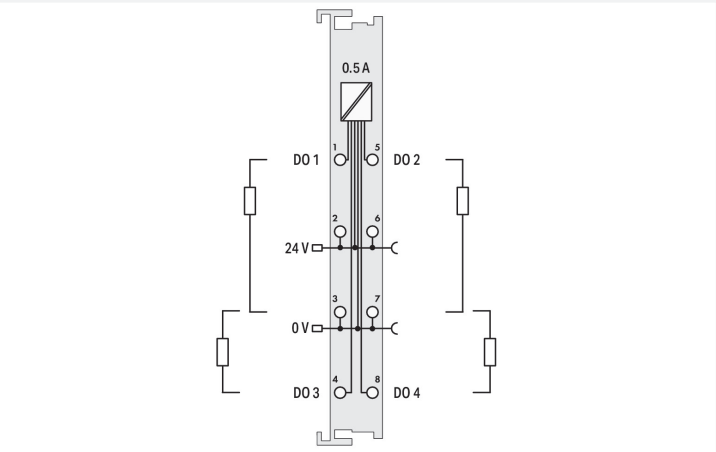

This digital output module transmits control signals from the automation device to the connected actuators.
All outputs are short-circuit-protected.
Field and system levels are electrically isolated.

Technical data	
Number of digital outputs	4
Total number of channels (module)	4
Signal type	Digital
Signal type (voltage)	24 VDC
Actuator connection	2 x (2-wire, 3-wire); A suitable field side connection module (e.g., 750-614) must also be used to connect other actuators.
Output characteristic	high-side switching
Output current per channel	0.5 A
Output current	short-circuit-protected
Load type	Resistive, inductive, lamp load
Switching frequency (max.)	1 kHz
Inductive load switch-off energy dissipation (max.)	0.3 J
Output data width (internal) max.	4 bits
Supply voltage (system)	5 VDC; via data contacts
Current consumption (system supply)	10 mA

Downloaded from Arrow.com.

Technical data

Supply voltage (field)	24 VDC (-25 ... +30 %); via power jumper contacts (power supply via blade contact; transmission (field side supply voltage only) via spring contact)
Current consumption, field supply (module with no external load)	30 mA
Isolation	500 V system/field
Indicators	LED (A-D) green: Status DO 1 ... DO 4
Number of incoming power jumper contacts	2
Number of outgoing power jumper contacts	2
Current carrying capacity (power jumper contacts)	10 A

Connection Data

Connection technology: I/O	8 x CAGE CLAMP® (outputs)
Connectable conductor materials	Copper
Connection type	Output
Solid conductor	0.08 ... 2.5 mm² / 28 ... 14 AWG
Fine-stranded conductor	0.08 ... 2.5 mm² / 28 ... 14 AWG
Strip length	8 ... 9 mm / 0.31 ... 0.35 inches

Physical data

Width	12 mm / 0.472 inches
Height	100 mm / 3.937 inches
Depth	69.8 mm / 2.748 inches
Depth from upper-edge of DIN-rail	62.6 mm / 2.465 inches

Mechanical data

Mounting type	DIN-35 rail
Pluggable connector	fixed

Material data

Color	light gray
Housing material	Polycarbonate; polyamide 6.6
Fire load	0.928 MJ
Weight	50 g
Conformity marking	CE

Environmental requirements

Ambient temperature (operation)	-20 ... +60 °C
Ambient temperature (storage)	-40 ... +85 °C
Protection type	IP20
Pollution degree	2 per IEC 61131-2
Operating altitude	0 ... 2000 m / 0 ... 6562 ft
Mounting position	Horizontal left, horizontal right, horizontal top, horizontal bottom, vertical top and vertical bottom
Relative humidity (without condensation)	95 %
Relative humidity (with condensation)	Short-term condensation per Class 3K6/IEC EN 60721-3-3 and E-DIN 40046-721-3, accounting for a temperature range of –20 to +60 °C (except for wind-driven precipitation, water and ice formation)
Vibration resistance	4g per IEC 60068-2-6
Shock resistance	15g per IEC 60068-2-27
EMC immunity to interference	per EN 61000-6-2, marine applications
EMC emission of interference	per EN 61000-6-4, marine applications
Exposure to pollutants	per IEC 60068-2-42 and IEC 60068-2-43
Permissible H_2S contaminant concentration at a relative humidity 75 %	10 ppm

Downloaded from Arrow.com.

Environmental requirements

Permissible SO_2 contaminant concentration at a relative humidity 75 %	25 ppm

Commercial data

Product Group	15 (I/O System)
PU (SPU)	1 pcs
Packaging type	Box
Country of origin	DE
GTIN	4050821017462
Customs tariff number	85371098990

Product Classification

UNSPSC	32151705
eCl@ss 10.0	27-24-26-04
eCl@ss 9.0	27-24-26-04
ETIM 9.0	EC001599
ETIM 10.0	EC001599
ECCN	NO US CLASSIFICATION

Environmental Product Compliance

CAS-No.	1303-86-2 1317-36-8 25550-51-0 7439-92-1 75980-60-8
REACH Candidate List Substance	4-Methyl-1,2-cyclohexanedicarboxylic anhydride Diboron trioxide Lead Lead monoxide Phosphine oxide, diphenyl(2,4,6-trimethylbenzoyl)-
RoHS Compliance Status	Compliant,With Exemption
RoHS Exemption	6(c) 7(a) 7(c)-I 7(c)-II
SCIP notification number (Austria)	950d0eac-f966-4cdd-ad5e-7f2824e0ca11
SCIP notification number (Belgium)	9e057386-db33-4dbb-a4f7-9a425b7d0d87
SCIP notification number (Bulgaria)	503217a6-f566-49a0-a5b6-0ff38390fdd4
SCIP notification number (Czech Republic)	0aec09c3-a6b6-4242-8e05-2135952ee806
SCIP notification number (Denmark)	e4471057-bd5d-4554-8fd1-9d67c02cdce0
SCIP notification number (Finland)	0b755d5b-46b7-47a0-8deb-4f5efe6b631d
SCIP notification number (France)	d6e71e72-677c-4982-9554-f5acb665b8ae
SCIP notification number (Germany)	96895727-17ad-4b6f-a792-3b0a7a0dba65
SCIP notification number (Hungary)	f3e13894-3c0e-4866-bda0-0d8e274ecd30
SCIP notification number (Italy)	a0f8847c-9eab-4e85-a801-a11dc377a533
SCIP notification number (Netherlands)	1d943b52-7adc-4d77-8f33-38c99b0bcaec
SCIP notification number (Poland)	c1ff1b0c-03c3-4489-8812-cd7744f57575
SCIP notification number (Romania)	0e5af73d-d394-4a14-a992-d0ea6e6516ae
SCIP notification number (Sweden)	df7bc067-69ae-4a13-91b1-f0d500c88b7d

Downloaded from Arrow.com.

Approvals / Certificates

General approvals

Approval	Standard	Certificate Name
EAC GZO Almaty Standart	TP TC 020/2011	EAC CoC 03083
KC National Radio Research Agency	Article 58-2, Clause 3	MSIP-REM-W43-DOM750
UL Underwriters Laboratories Inc. (ORDINARY LOCATIONS)	UL 508	E175199

Declarations of conformity and manufacturer's declarations

Approval	Standard	Certificate Name
EU-Declaration of Conformity WAGO GmbH & Co. KG	-	-
UK-Declaration of Conformity WAGO GmbH & Co. KG	-	-

Approvals for marine applications

Approval	Standard	Certificate Name
ABS American Bureau of Shipping	-	22-2227356-PDA
BSH Bundesamt fuer Seeschiffahrt und Hydrographie	-	1104
DNV DNV Germany GmbH	DNV-CG-0339,Aug.2021	TAA00001J4
LR Lloyds Register	-	LR2475997TA
PRS Polski Rejestr Statków	-	TE/1102/880590/23

Approvals for hazardous areas

Approval	Standard	Certificate Name
ATEX TUEV Nord Cert GmbH	EN 60079-0	TUEV14ATEX148929X (II 3 G Ex ec IIC T4 Gc)
CCCEx CQST/CNEx	CNCA-C23-01	2020312310000213 (Ex ec IIC T4 Gc)
IECEx TUEV Nord Cert GmbH	IEC 60079-0	IECEx TUN 14.0035 X (Ex ec IIC T4 Gc)
INMETRO TÜV Rheinland do Brasil Ltda.	IEC 60079-0	TÜV 12.1297 X
UKEx WAGO GmbH & Co. KG	EN 60079-0	UKCA_WA GO22UKEX003X_ec
UL Underwriters Laboratories Inc. (HAZARDOUS LOCATIONS)	UL 121201	E198726

Downloads

Environmental Product Compliance

Compliance Search

Environmental Product Compliance
750-504/025-000

Downloaded from Arrow.com.

Documentation

Manual

Product Manual 4-channel, 24VDC, 0.5A	2492330635 | 3 | en-US | 2025-07-01 13:09 07.10.2025	pdf 1009.84 KB	
System Manual Series 750/753			

System Description

750/753 Series I/O-System – General Product Information	pdf 953.35 KB	
Overview on WAGO-I/O-SYSTEM 750 approvals	pdf 770.48 KB	

Bid Text

750-504/025-000	19.02.2019	xml 4.21 KB	
750-504/025-000	12.07.2017	doc 29.00 KB	

Instruction Leaflet

CCC Ex (Additional information)	26.04.2023	pdf 159.76 KB	

CAD/CAE-Data

CAD data

2D/3D Models 750-504/025-000

CAE data

EPLAN Data Portal 750-504/025-000

WSCAD Universe 750-504/025-000

ZUKEN Portal 750-504/025-000

Device Files

Device Driver

WAGO USB Service Kabel Treiber / Serie 750 und 857	6.5.3.0 10.09.2014	zip 4721.96 KB	

1 Compatible Products

1.1 Optional Accessories

1.1.1 DIN-rail

1.1.1.1 Mounting accessories

Item No.: 210-196
Aluminum carrier rail; 35 x 8.2 mm; 1.6 mm thick; 2 m long; unslotted; similar to EN 60715; silver-colored

Item No.: 210-198
Copper carrier rail; 35 x 15 mm; 2.3 mm thick; 2 m long; unslotted; according to EN 60715; copper-colored

Item No.: 210-197
Steel carrier rail; 35 x 15 mm; 1.5 mm thick; 2 m long; slotted; similar to EN 60715; silver-colored

Item No.: 210-114
Steel carrier rail; 35 x 15 mm; 1.5 mm thick; 2 m long; unslotted; similar to EN 60715; silver-colored

Item No.: 210-118
Steel carrier rail; 35 x 15 mm; 2.3 mm thick; 2 m long; unslotted; according to EN 60715; silver-colored

Item No.: 210-112
Steel carrier rail; 35 x 7.5 mm; 1 mm thick; 2 m long; slotted; according to EN 60715; "Hole width 25 mm; silver-colored

Item No.: 210-113
Steel carrier rail; 35 x 7.5 mm; 1 mm thick; 2 m long; unslotted; according to EN 60715; silver-colored

Downloaded from Arrow.com.

1.1.2 Marking

1.1.2.1 Group marker carrier

Item No.: 750-106
Group marker carrier

1.1.2.2 Marker

Item No.: 750-100
Marker card; as a DIN A4 sheet; plain

Item No.: 2009-145/000-006
Mini-WSB Inline; for Smart Printer; 1700 pieces on roll; stretchable 5 - 5.2 mm; plain; snap-on type; blue

Item No.: 2009-145/000-007
Mini-WSB Inline; for Smart Printer; 1700 pieces on roll; stretchable 5 - 5.2 mm; plain; snap-on type; gray

Item No.: 2009-145/000-023
Mini-WSB Inline; for Smart Printer; 1700 pieces on roll; stretchable 5 - 5.2 mm; plain; snap-on type; green

Item No.: 2009-145/000-012
Mini-WSB Inline; for Smart Printer; 1700 pieces on roll; stretchable 5 - 5.2 mm; plain; snap-on type; orange

Item No.: 2009-145/000-005
Mini-WSB Inline; for Smart Printer; 1700 pieces on roll; stretchable 5 - 5.2 mm; plain; snap-on type; red

Item No.: 2009-145/000-024
Mini-WSB Inline; for Smart Printer; 1700 pieces on roll; stretchable 5 - 5.2 mm; plain; snap-on type; violet

Item No.: 2009-145
Mini-WSB Inline; for Smart Printer; 1700 pieces on roll; stretchable 5 - 5.2 mm; plain; snap-on type; white

Item No.: 2009-145/000-002
Mini-WSB Inline; for Smart Printer; 1700 pieces on roll; stretchable 5 - 5.2 mm; plain; snap-on type; yellow

Item No.: 248-501/000-006
Mini-WSB marking card; as card; not stretchable; plain; snap-on type; blue

Item No.: 248-501/000-007
Mini-WSB marking card; as card; not stretchable; plain; snap-on type; gray

Item No.: 248-501/000-023
Mini-WSB marking card; as card; not stretchable; plain; snap-on type; green

Item No.: 248-501/000-017
Mini-WSB marking card; as card; not stretchable; plain; snap-on type; light green

Item No.: 248-501/000-012
Mini-WSB marking card; as card; not stretchable; plain; snap-on type; orange

Item No.: 248-501/000-005
Mini-WSB marking card; as card; not stretchable; plain; snap-on type; red

Item No.: 248-501/000-024
Mini-WSB marking card; as card; not stretchable; plain; snap-on type; violet

Item No.: 248-501
Mini-WSB marking card; as card; not stretchable; plain; snap-on type; white

Item No.: 248-501/000-002
Mini-WSB marking card; as card; not stretchable; plain; snap-on type; yellow

1.1.2.3 Marker carrier

Item No.: 750-103
Group marker carrier

1.1.3 Potential distribution

1.1.3.1 Potential Distribution Module

Item No.: 750-614
Potential Distribution

Downloaded from Arrow.com.

1.1.4 Shield termination

1.1.4.1 Shield clamping saddles

Item No.: 790-108
Shield clamping saddle; 11 mm wide; diameter of compatible conductor; 3 ... 8 mm

Item No.: 790-208
Shield clamping saddle; 12.4 mm wide; 3 ... 8 mm

Item No.: 790-116
Shield clamping saddle; 19 mm wide; diameter of compatible conductor; 7 ... 16 mm

Item No.: 790-216
Shield clamping saddle; 21.8 mm wide; 6 ... 16 mm

Item No.: 790-124
Shield clamping saddle; 27 mm wide; diameter of compatible conductor; 6 ... 24 mm

Item No.: 790-220
Shield clamping saddle; 30 mm wide; 6 ... 20 mm

Item No.: 790-140
Shield clamping saddle; diameter of compatible conductor

1.1.5 Supply module

1.1.5.1 Supply module

Item No.: 750-602/025-000
Power Supply; 24 VDC; Ext. Temperature

1.1.6 System enclosure

1.1.6.1 System enclosure

Item No.: 850-825
IP65 enclosure; Aluminium (RAL 7032); WxHxD (160x100x160 mm); 9 x M12, 4 x M20

Item No.: 850-826
IP65 enclosure; Aluminium (RAL 7032); WxHxD (240x100x160 mm); 4 x M20, 4 x M16, 14 x M12 cable grip

Item No.: 850-827
IP65 enclosure; Aluminium (RAL 7032); WxHxD (320x100x160 mm); 4 x M20, 8 x M16, 17 x M12 cable grip

Item No.: 850-828
IP65 enclosure; Aluminium (RAL 7032); WxHxD (480x100x160 mm); 4 x M20, 10 x M16, 35 x M12 cable grip

Item No.: 850-826/002-000
IP65 enclosure; Aluminium (RAL 7035); WxHxD (240x100x160 mm); 4 x M20, 4 x M16, 14 x M12 cable grip

Item No.: 850-827/002-000
IP65 enclosure; Aluminium (RAL 7035); WxHxD (320x100x160 mm); 4 x M20, 8 x M16, 17 x M12 cable grip

Item No.: 850-828/002-000
IP65 enclosure; Aluminium (RAL 7035); WxHxD (480x100x160 mm); 4 x M20, 10 x M16, 35 x M12 cable grip

Item No.: 850-834
IP65 enclosure; Polyester (RAL 7032); WxHxD (164x100x164 mm); 9 x M12, 4 x M20

Item No.: 850-835
IP65 enclosure; Polyester (RAL 7032); WxHxD (244x100x164 mm); 4 x M20, 4 x M16, 14 x M12 cable grip

Item No.: 850-836
IP65 enclosure; Polyester (RAL 7032); WxHxD (324x100x164 mm); 4 x M20, 8 x M16, 17 x M12 cable grip

Item No.: 850-814/002-000
IP65 enclosure; Sheet steel (RAL 7035); WxHxD (200x120x200 mm); without flange plate

Item No.: 850-815/002-000
IP65 enclosure; Sheet steel (RAL 7035); WxHxD (300x120x200 mm); without flange plate

Item No.: 850-816/002-000
IP65 enclosure; Sheet steel (RAL 7035); WxHxD (400x120x200 mm); without flange plate

Item No.: 850-817/002-000
IP65 enclosure; Sheet steel (RAL 7035); WxHxD (600x120x200 mm); without flange plate

Downloaded from Arrow.com.