CMOS Digital Integrated Circuit Silicon Monolithic

TMPM4M Group(1)

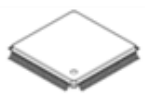

LQFP100 14x14mm, 0.5mm pitch
LQFP80 12x12mm, 0.5mm pitch
LQFP64 14x14mm, 0.8mm pitch
LQFP64 10x10mm, 0.5mm pitch

QFP100 14x20mm, 0.65mm pitch

General Description

- Arm® Cortex®-M4 processor with FPU
  Operating frequency: 1 to 160 MHz, Operating voltage: 2.7 to 5.5 V
- Code flash: 128KB to 256KB, Data flash: 32KB
- Package: 64-pin to 100-pin. 5 types of packages are available.
- Hardware IPs such as A-VE+, 12-bit ADC, and A-PMD are provided for implementation of vector control and PFC control

Applications

Motors, major appliances using motors, and industrial equipment.

Features

- Arm Cortex-M4 processor with FPU
  - Operating frequency: 1 to 160 MHz
  - Memory Protection Unit (MPU)
- Low-power consumption mode
  - Operating voltage: 2.7 to 5.5 V
    4.5 to 5.5 V (All Functions)
    2.7 to 4.5 V (Without OPAMP, ADC)
  - Low-power consumption operation: IDLE, STOP1
- Operating temperature: -40 to +105°C
- Internal memory
  - Code flash: 128KB to 256KB, rewritable up to 100,000 times
  - Data flash: 32KB rewritable up to 100,000 times
  - Data flash is rewritable in parallel with instruction execution
  - RAM: 24KB, with parity
- Clock
  - External high speed oscillator: 6 to 12 MHz(Ceramic, Crystal)
  - External high speed clock input: 6 to 10 MHz
  - Internal high speed oscillator (IHOSC1): 10 MHz, user trimming function
  - PLL: 160 MHz output(System clock)
- Oscillation frequency detection (OFD): Abnormal system clock detection
- Voltage Detection (LVD): 8 level, Generate interrupts and reset outputs
- Interruption
  - Externa factors: 15 to 20
    (External pinsfactors: 20 to 32 pins, with DNF)
    Internal factors: 96 to 103
- I/O ports: 51 to 87 (Input:2, Output:1)
  - 5V-tolerant, open-drain, pull-up/-down
- On-chip debug (JTAG/SW), NBDIF(RAM monitor)
- Trigger Selector (TRGSEL)
  - Expand Trigger request for DMAC, Timer, others
- DMA controller (DMAC): 1 unit
  - DMA requests: 30 to 32 factors, internal/external triggers
- CRC Calculation Circuit (CRC): CRC32, CRC16
- Asynchronous Serial Interface (UART): 3 to 4 channels
  - 5Mbps(Max), FIFO(Transmission 8-stage, Reception 8-stage)
- Serial Peripheral Interface (TSPI): 2 channels
  - SIO/SPI mode, 10MHz(MAX), FIFO(Transmitter: 16bitx8, Receiver: 16bitx8)
- I^2C Interface
  - I^2C Interface (I2C): 2 channels, Multi Master
  - I^2C Interface Version A (EI2C): 2 channels
    Multi Master, support 10bit Slave addressing
- CAN controller (CAN): 1 unit
  - Version2.0B Active, 32 mailbox, MAX 1Mbps
- 12-bit Analog to Digital Converter (ADC): 14 to 22 inputs in 3 units
  - Conversion time: 1.0 μs at ADCLK=160MHz
  - Self-diagnosis support function
- Operational Amplifier (OPAMP): 3 units
  - Gain selectable
- Advanced programmable motor control circuit (A-PMD): 3 channels
  - 3-phase complementary PWM output, Synchronized with ADC
  - PFC control: support 3-phase interleaved PFC
  - Emergency stop function by external inputs (EMG pin, OVV pin)

Start of commercial production
2021-08

©2026
Toshiba Electronic Devices & Storage Corporation

Downloaded from Arrow.com.

- Advanced vector engine plus (A-VE+): 1 channel
  - Vector control coprocessor cooperates with ADC/A-PMD
  - 1-shunt current detection area can be enlarged
  - Dead time compensation control, non-interference control
- Advanced Encoder input circuit (32-bit) (A-ENC32): 1, 3 channels
  - Encoder/sensor (3 types)/Timer /Phase counter mode
- 32-bit Timer Event Counter (T32A)
  - 6 channels as 32-bit Timers, 12 channels as 16-bit Timers
  - Interval Timer, event counter, input capture, phase difference input, PPG output, Sync Start, Trigger start
- Watchdog timer (SIWDT): 1 channel
  - Clock system other than the system clock can be selected
  - Clear window, interrupts and reset output

Downloaded from Arrow.com.

Products Lists Categorized by Functions

The product under development is contained in this table.
For the newest status of each product, please contact your sales representative.

Table.1.1 Products Lists

Built-in Functions		TMPM4MNFYADFG TMPM4MNFWADFG	TMPM4MMFYAFG TMPM4MMFWAFG	TMPM4MLFYAUG TMPM4MLFWAUG
		TMPM4MNFYAFG TMPM4MNFWAFG		TMPM4MLFYAFG TMPM4MLFWAFG
Memory	Code Flash (KB)	256 128	256 128	256 128
	Data Flash (KB)	32	32	32
	RAM (KB)	24	24	24
I/O port	PORT (pin)	87	67	51
External interrupt	Factor	20	18	15
	Pin	32	24	20
DMA	DMAC (ch)	32	32	30
Timer function	T32A (ch)	6	6	6
Serial communication function	UART (ch)	4	4	3
	I2C / Ei2C (ch)	2 / 2	2 / 2	2 / 2
	TSPI(SIO) (ch)	2	2	2
	CAN (unit)	1	1	1
Analog function	12-bit ADC Unit A/B/C (AIN ch)	11/5/6	8/5/4	8/3/3
	OPAMP (unit)	3	3	3
Motor control peripherals	A-VE+ (ch)	1	1	1
	A-PMD (ch)	3	3(Note1)	3(Note1)
	A-ENC32 (ch)	3	3(Note2)	1
Other peripherals	CRC	1	1	1
	RAMP (ch)	2	2	2
System function	LVD	1	1	1
	WDT (ch)	1	1	1
	OFD	1	1	1
	POR	1	1	1
Debug interface	Debug	JTAG/SW TRACE(4bits) NBDIF	SW	SW
Package	Package type	QFP100 (14 mm x 20 mm, 0.65 mm pitch)	LQFP80 (12 mm x 12 mm, 0.5 mm pitch)	LQFP64 (10 mm x 10 mm, 0.5 mm pitch)
		LQFP100 (14 mm x 14 mm, 0.5 mm pitch)		LQFP64 (14 mm x 14 mm, 0.8 mm pitch)

Note1: There is no OVVx pin.
Note2: There is no ENC1Z pin.

Downloaded from Arrow.com.

Contents

General Description 1
Applications 1
Features 1
Products Lists Categorized by Functions 3
Contents 4
List of Figures 7
List of Tables 8
Preface 9
Conventions 9
Terms and Abbreviations 11
1. Block Diagram 12
2. Pin Assignment 13
2.1. QFP100 13
2.2. LQFP100 14
2.3. LQFP80 15
2.4. LQFP64 16
3. Memory Map 17
3.1. List of Memory Sizes 18
4. Pin Description 19
4.1. Functional Pin Name and Functions 19
4.1.1. Function Pins of Peripheral 19
4.1.2. Debug Pins 21
4.1.3. Control Pins 22
4.1.4. Power Supply Pins 22
4.1.5. Capacitors between power supply pins 23
4.2. Functional Pin and Ports Assignment (Pin Number) 24
4.3. Ports 32
4.3.1. Port Specification Table 33
5. Functional Description and Operation Description 37
5.1. Reference Manuals 37
5.2. Processor Core 38
5.2.1. Core Information 38
5.2.2. Configurable Options 38
5.3. Clock Control and Operation Mode (CG) 39
5.4. Flash Memory (Code FLASH, Data FLASH) 39
5.5. Oscillator 40
5.6. Trimming Circuit (TRM) 40
5.7. Oscillation Frequency Detection Circuit (OFD) 41
5.8. Voltage Detection Circuit (LVD) 41

Downloaded from Arrow.com.

5.9. Digital Noise Filter circuit(DNF) 41
5.10. Debug Interface (DEBUG) 42
5.10.1. Non Break Debug Interface (NBDIF) 42
5.11. DMA Controller (DMAC) 43
5.12. Asynchronous Serial Communication Circuit (UART) 43
5.13. Serial Peripheral Interface (TSPI) 44
5.14. I^{2}C Interface 44
5.14.1. I^{2}C Interface (I2C) 44
5.14.2. I^{2}C Interface Version A (EI2C) 44
5.15. CAN controller (CAN) 45
5.16. 12-bit Analog to Digital Converter (ADC) 45
5.17. Operational Amplifier (OPAMP) 45
5.18. Advanced Programmable Motor Control Circuit (A-PMD) 46
5.19. Advanced Encoder Input Circuit (32-bit) (A-ENC32) 46
5.20. Advanced Vector Engine Plus (A-VE+) 47
5.21. 32-bit Timer Event Counter (T32A) 47
5.22. Clock Selective Watchdog Timer (SIWDT) 48
5.23. CRC Calculation Circuit (CRC) 48
5.24. RAM Parity (RAMP) 48
5.25. Measures for Security Risk 49
5.25.1. Outline 49
5.25.2. Disclaimer 49
6. Equivalent Circuit 50
6.1. Port 50
6.2. Analog Reference pin 53
6.3. Control Pin 54
6.4. Clock control 54
7. Electrical Characteristics 55
7.1. Absolute Maximum Ratings 55
7.2. DC Electrical Characteristics (1/2) 58
7.3. DC Electrical Characteristics (2/2) 62
7.4. 12-bit AD Converter Characteristics 64
7.5. Operational Amplifier (OPAMP) Characteristics 65
7.6. Characteristics of Internal processing at RESET 66
7.7. Characteristics of Power on Reset 66
7.8. Characteristics of PORF 66
7.9. Characteristics of Voltage Detection Circuit 67
7.10. AC Electrical Characteristics 68
7.10.1. Serial Peripheral Interface (TSPI) 68
7.10.1.1. Conditions 68
7.10.1.2. AC Electrical Characteristics 68

Downloaded from Arrow.com.

7.10.2. I²C Interface (I2C) 76
7.10.2.1. Conditions 76
7.10.2.2. AC Electrical Characteristics 76
7.10.3. I²C Interface Version A(EI2C) 78
7.10.3.1. Conditions 78
7.10.3.2. AC Electrical Characteristics 78
7.10.4. 32-bit Timer Event Counter (T32A) 79
7.10.4.1. Conditions 79
7.10.4.2. AC Electrical Characteristics 80
7.10.5. External Interrupt 81
7.10.5.1. Conditions 81
7.10.5.2. AC Electrical Characteristics 81
7.10.6. Trigger Input (TRGINx) 82
7.10.6.1. Conditions 82
7.10.6.2. AC Electrical Characteristics 82
7.10.7. Debug Communication 83
7.10.7.1. Conditions 83
7.10.7.2. SWD Interface 83
7.10.7.3. JTAG Interface 84
7.10.7.4. ETM Trace 85
7.10.7.5. Non Break Debug Interface (NBDIF) 86
7.10.8. Noise Filter Characteristics 87
7.10.9. External Clock Input 87
7.10.9.1. Conditions 87
7.10.9.2. AC Electrical Characteristics 87
7.11. Flash Memory Characteristics 88
7.11.1. Code Flash 88
7.11.2. Data Flash 88
7.11.3. Chip Erase 89
7.12. Regulator 89
7.13. Oscillation Circuit 90
7.13.1. Internal Oscillator 90
7.13.2. External Oscillator 90
7.13.3. Oscillation Circuit 90
7.13.4. Ceramic resonator 91
7.13.5. Crystal unit 91
7.13.6. Precautions for designing printed circuit board 91
8. Package Dimensions 92
8.1. P-LQFP100-1414-0.50-002 92
8.2. P-QFP100-1420-0.65-003 93
8.3. P-LQFP80-1212-0.50-005 94
8.4. P-LQFP64-1010-0.50-003 95
8.5. P-LQFP64-1414-0.80-002 96
9. Precautions 97

Downloaded from Arrow.com.

10. Revision History 98
Appendix 99
List of All pins 99
Part Naming Conventions 101
RESTRICTIONS ON PRODUCT USE 102

List of Figures

Figure 1.1 Block diagram of the TMPM4M Group(1) products 12
Figure 3.1 Example of the TMPM4MxFYA 17
Figure 4.1 Capacitors for power supply pins connection circuit 23
Figure 5.1 Measures for security risk 49
Figure 7.1 Notice When a Power is Turned On and Off 56
Figure 7.2 Through rate 65
Figure 7.3 1st clock edge sampling (Master) 74
Figure 7.4 2nd clock edge sampling (Master) 74
Figure 7.5 1st clock edge sampling (slave) 75
Figure 7.6 2nd clock edge sampling (Slave) 75
Figure 7.7 AC timing of I2C 77
Figure 7.8 AC timing of EI2C 79
Figure 7.9 Count Pulse input 80
Figure 7.10 JTAG/SW waveform 84
Figure 7.11 Trace signal waveform 85
Figure 7.12 AC timing of NBDIF 86
Figure 7.13 External clock input waveform 87
Figure 7.14 Oscillation circuit sample 90

Downloaded from Arrow.com.

List of Tables

Table.1.1 Products Lists ... 3
Table 3.1 Memory sizes and addresses ... 18
Table 4.1 Pin names and functions of peripheral pins ... 19
Table 4.2 Debug pin names and their function ... 21
Table 4.3 Control pin names and their function ... 22
Table 4.4 Power supply pin names and their function ... 22
Table 4.5 Signal connection List: UART ... 24
Table 4.6 Signal connection List: I2C/EI2C/TSPI/CAN ... 25
Table 4.7 Signal connection List: T32A ch0,1,2 ... 26
Table 4.8 Signal connection List: T32A ch3,4,5 ... 27
Table 4.9 Signal connection List: ADC ... 28
Table 4.10 Signal connection List: INT ... 29
Table 4.11 Signal connection List: A-PMD/A-ENC32 ... 30
Table 4.12 Signal connection List: TRGSEL/JTAG/SW/TRACE/NBDIF/Control pin ... 31
Table 4.13 Pin numbers, and specifications of Port A, B, C, D ... 33
Table 4.14 Pin numbers, and specifications of Port E, F, G, H ... 34
Table 4.15 Pin numbers, and specifications of Port J, K, L ... 35
Table 4.16 Pin numbers, and specifications of Port M, N, U, V ... 36
Table 5.1 Reference Manuals for TMPM4M Group(1) ... 37
Table 5.2 Core revision ... 38
Table 5.3 Configurable options and their implementations ... 38
Table 5.4 Built-in Oscillator ... 40
Table 5.5 Built-in TRM ... 40
Table 5.6 Built-in OFD ... 41
Table 5.7 Built-in LVD ... 41
Table 5.8 Number of DNF ... 41
Table 5.9 Built-in Debug Interface ... 42
Table 5.10 Built-in DMAC ... 43
Table 5.11 Built-in UART ... 43
Table 5.12 Built-in TSPI ... 44
Table 5.13 Built-in I2C / EI2C ... 44
Table 5.14 Built-in CAN ... 45
Table 5.15 Built-in ADC channel list ... 45
Table 5.16 Built-in OPAMP ... 45
Table 5.17 Built-in A-PMD ... 46
Table 5.18 Built-in A-ENC ... 46
Table 5.19 Built-in A-VE+ ... 47
Table 5.20 Built-in T32A ... 47
Table 5.21 Built-in SIWDT ... 48
Table 5.22 Built-in CRC ... 48
Table 5.23 Built-in RAMP ... 48
Table 5.24 Access paths and protection targets (1) ... 49
Table 5.25 Access paths and protection targets (2) ... 49
Table 7.1 Absolute maximum ratings ... 55
Table 7.2 Thermal resistance of IC package and maximum allowable power table ... 57
Table 7.3 I_{DD} measurement condition (Pin setting, Oscillation Circuit) ... 62
Table 7.4 I_{DD} measurement condition (CPU, Peripheral) ... 63
Table 10.1 Revision History ... 98

Downloaded from Arrow.com.

Preface

Conventions

- Numeric formats follow the rules as shown below:
  Hexadecimal: 0xABC
  Decimal: 123 or 0d123 - Only when it needs to be explicitly shown that they are decimal numbers.
  Binary: 0b111 - It is possible to omit the "0b" when the number of bits can be distinctly understood from a sentence.
- "_N" is added to the end of signal names to indicate low active signals.
- It is called "assert" that a signal moves to its active level, "deassert" to its inactive level.
- When two or more signal names are referred, they are described like as [m:n].
  Example: S[3:0] shows four signal names S3, S2, S1 and S0 together.
- The characters surrounded by ***[ ]*** defines the register.
  Example: ***[ABCD]***
- "N" substitutes suffix number of two or more same kind of registers, fields, and bit names.
  Example: ***[XYZ1]***, ***[XYZ2]***, ***[XYZ3]*** → ***[XYZn]***
- "x" substitutes suffix number or character of units and channels in the register list.
- In case of unit, "x" means A, B, and C, ...
  Example: ***[ADACR0]***, ***[ADBCR0]***, ***[ADCCR0]*** → ***[ADxCR0]***
- In case of channel, "x" means 0, 1, and 2, ...
  Example: ***[T32A0RUNA]***, ***[T32A1RUNA]***, ***[T32A2RUNA]*** → ***[T32AxRUNA]***
- The bit range of a register is written like as [m: n].
  Example: Bit[3: 0] expresses the range of bit 3 to 0.
- The configuration value of a register is expressed by either the hexadecimal number or the binary number.
  Example: ***[ABCD]***<EFG> = 0x01 (hexadecimal), ***[XYZn]***<VW> = 1 (binary)
- Word and byte represent the following bit length.
  Byte: 8 bits
  Half word: 16 bits
  Word: 32 bits
  Double word: 64 bits
- Properties of each bit in a register are expressed as follows:
  R: Read only
  W: Write only
  R/W: Read and write are possible.
- Unless otherwise specified, register access supports only word access.
- The register defined as "Reserved" must not be rewritten. Moreover, do not use the read value.
- The value read from the bit having default value of "-" is unknown.
- When a register containing both of writable bits and read-only bits is written, read-only bits should be written with their default value, In the cases that default is "-", follow the definition of each register.
- Reserved bits of the write-only register should be written with their default value. In the cases that default is "-", follow the definition of each register.
- Do not use read-modified-write processing to the register of a definition which is different by writing and read out.

Downloaded from Arrow.com.

****
Arm, Cortex and Thumb are registered trademarks of Arm Limited (or its subsidiaries) in the US and/or elsewhere. All rights reserved.
****

All other company names, product names, and service names mentioned herein may be trademarks of their respective companies.

Downloaded from Arrow.com.

Terms and Abbreviations

Some of abbreviations used in this document are as follows:

ADC	Analog to Digital Converter
A-ENC32	Advanced Encoder Input Circuit (32-bit)
A-PMD	Advanced Programmable Motor Control Circuit
A-VE+	Advanced Vector Engine Plus
CAN	Controller Area Network
CRC	Cyclic Redundancy Check
DMAC	Direct Memory Access Controller
DNF	Digital Noise Filter
EHOSC	External High-speed Oscillator
EI2C	I^2C Interface Version A
IHOSC	Internal High-speed Oscillator
INT	Interrupt
I2C	Inter-Integrated Circuit
LVD	Voltage Detection Circuit
NBDIF	Non Break Debug Interface
NMI	Non-Maskable Interrupt
OFD	Oscillation Frequency Detector
OPAMP	Operational Amplifier
POR	Power On Reset Circuit
RAMP	RAM Parity
SIWDT	Clock Selective Watchdog Timer
TRGSEL	Trigger Selection Circuit
TRM	Trimming Circuit
TSPI	Serial Peripheral Interface
T32A	32-bit Timer Event Counter
UART	Asynchronous Serial Communication Circuit

Downloaded from Arrow.com.

1. Block Diagram

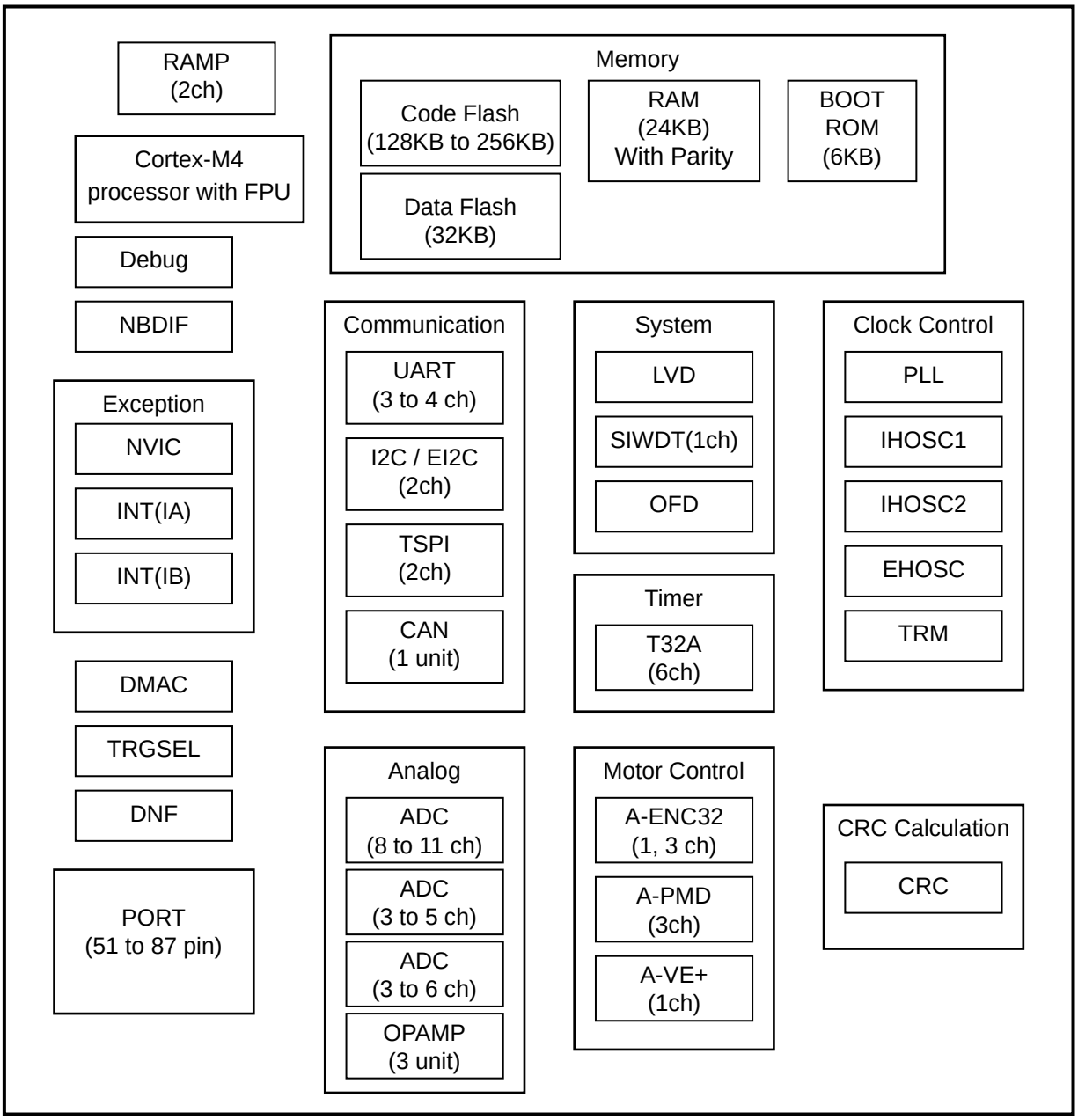

Figure 1.1 Block diagram of the TMPM4M Group(1) products

Downloaded from Arrow.com.

2. Pin Assignment

2.1. QFP100

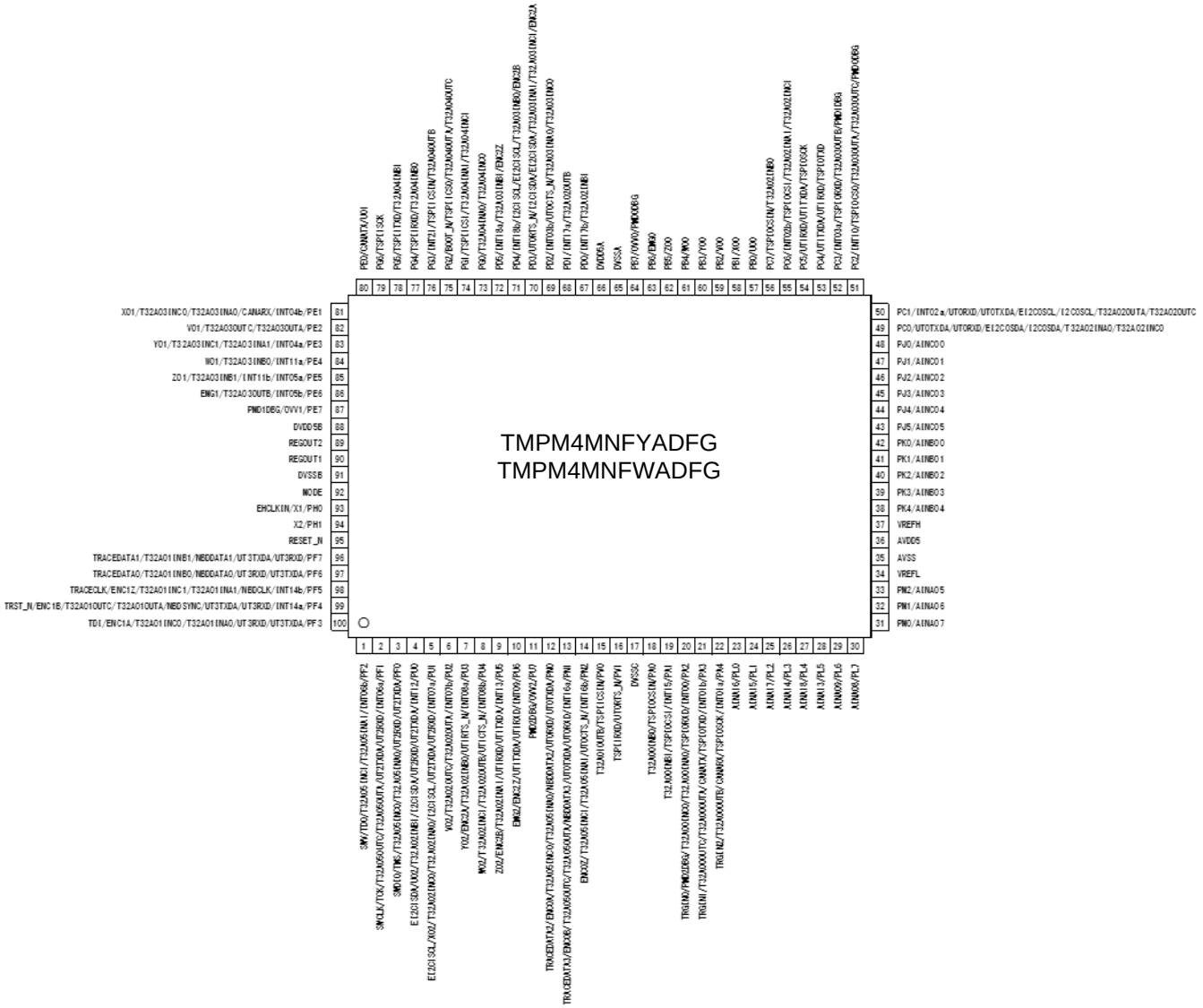

Downloaded from Arrow.com.

2.2. LQFP100

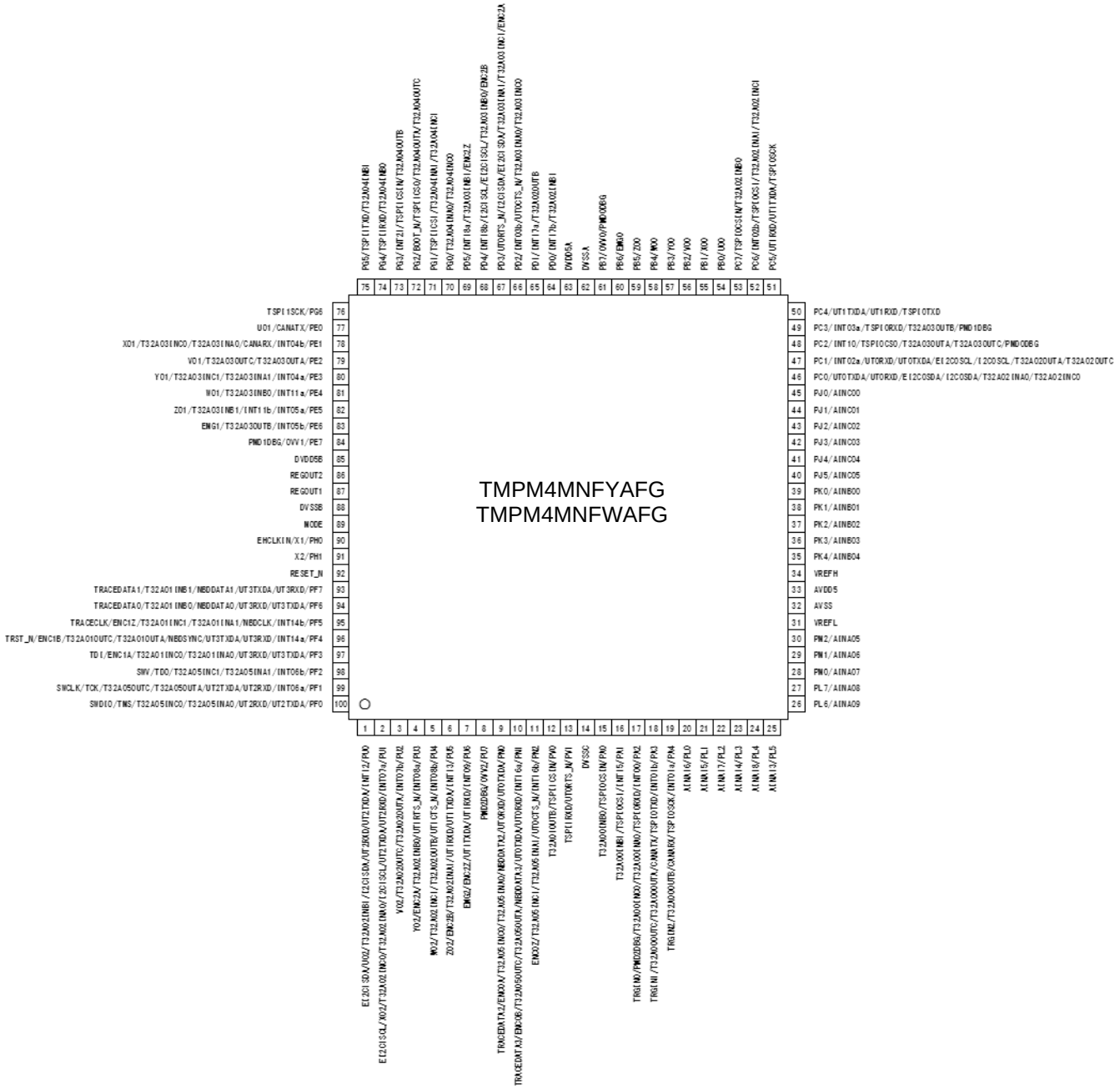

Downloaded from Arrow.com.

2.3. LQFP80

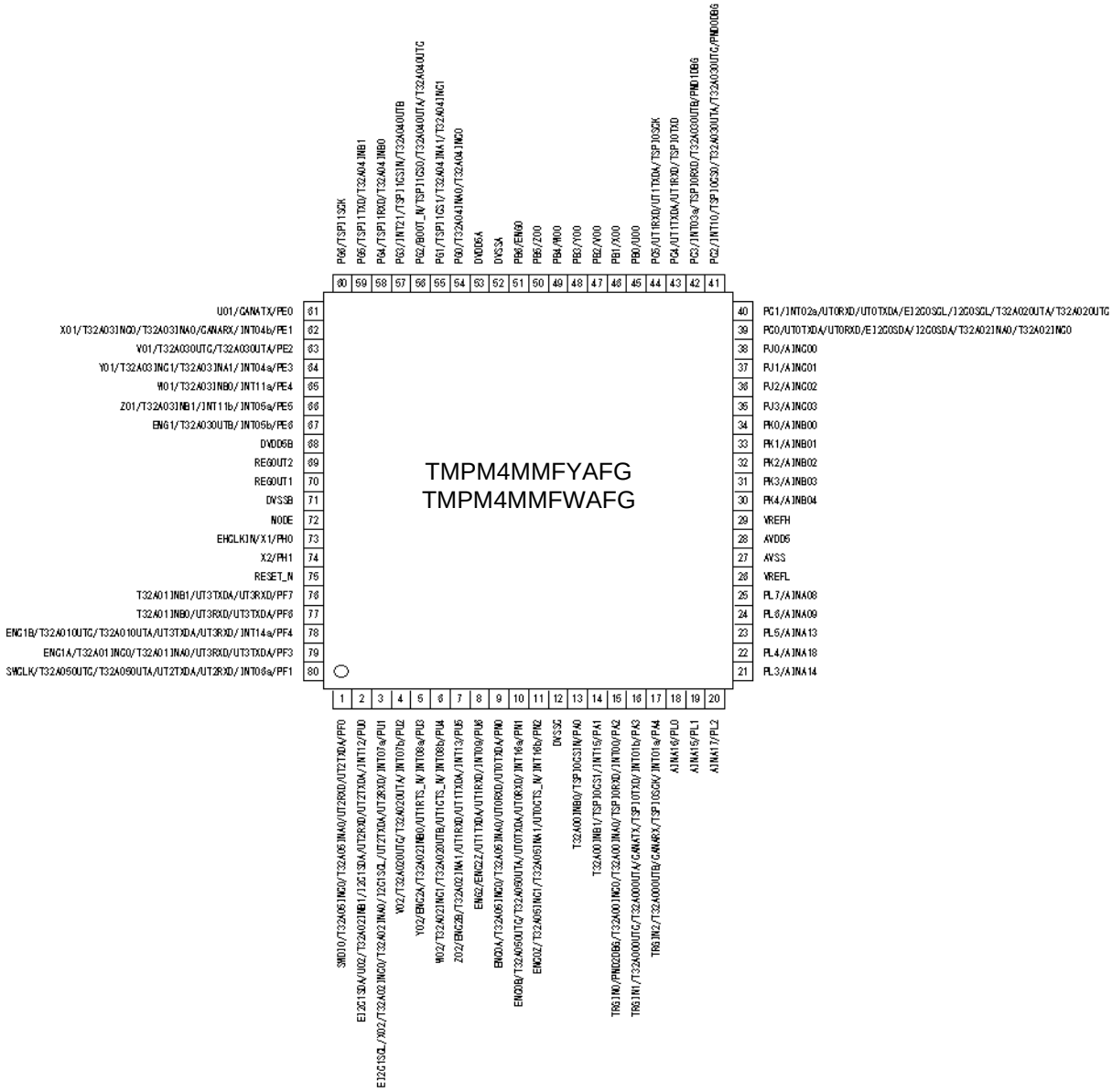

Downloaded from Arrow.com.

2.4. LQFP64

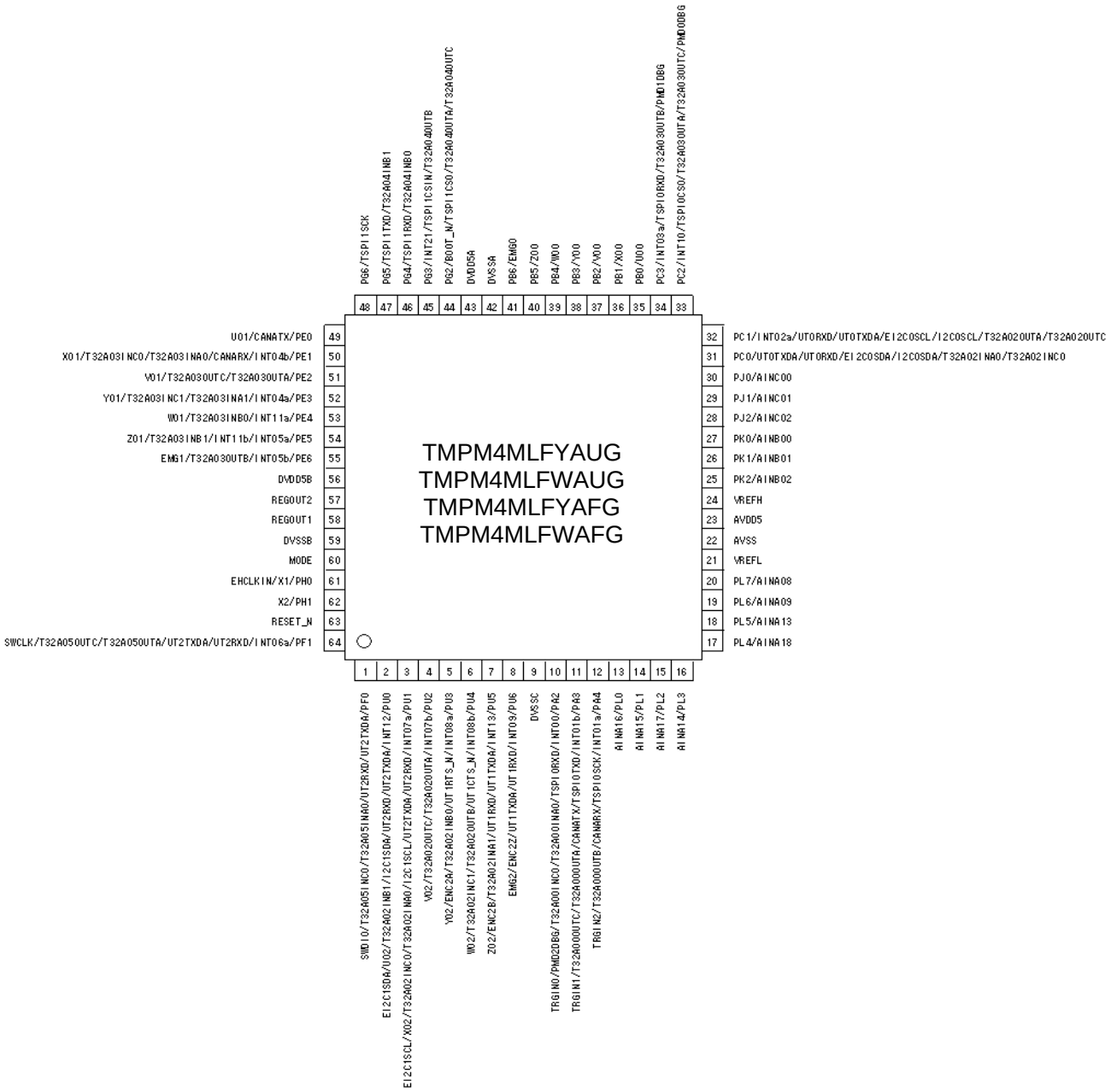

Downloaded from Arrow.com.

3. Memory Map

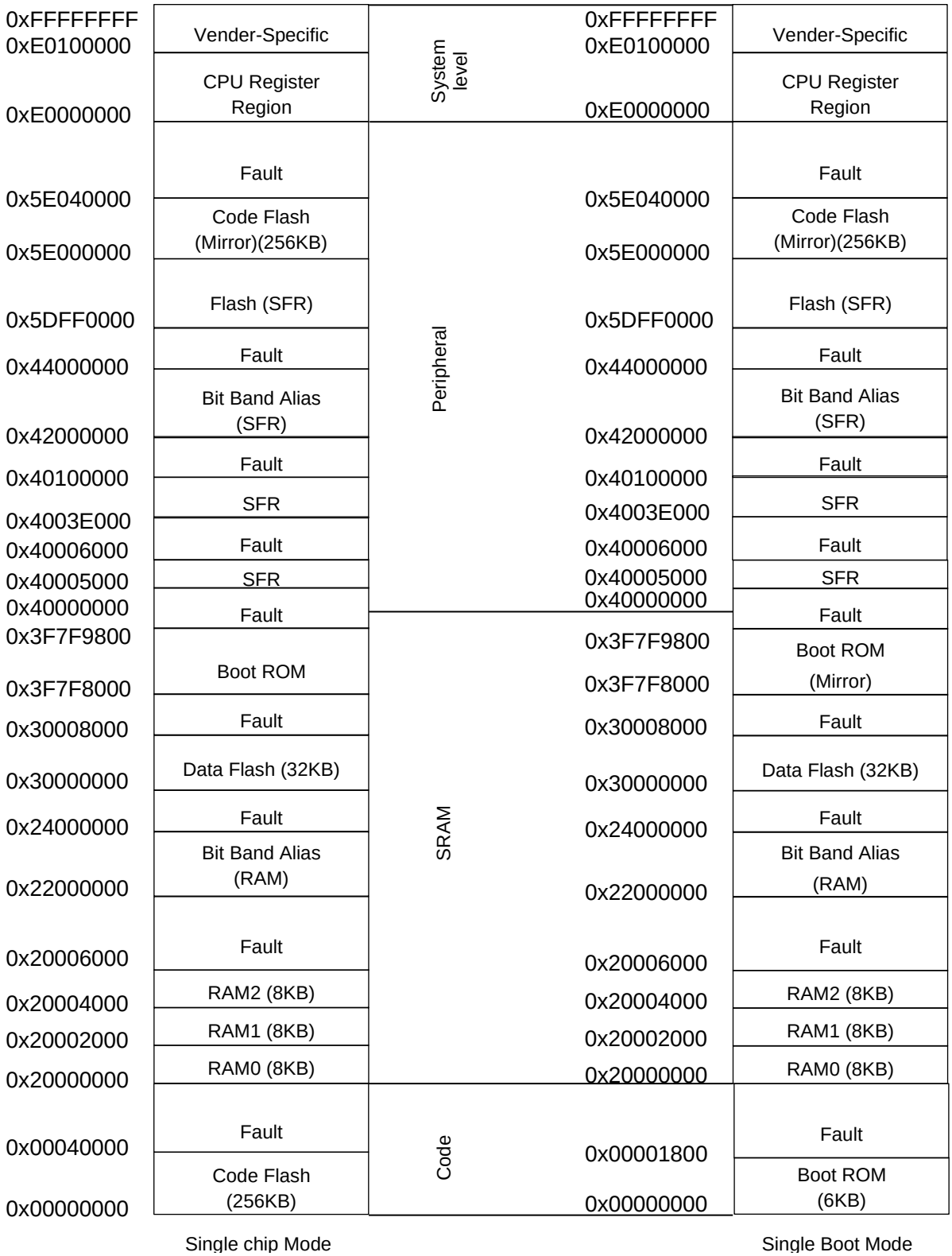

Figure 3.1 Example of the TMPM4MxFYA

Note1: Fault, Reserved: Please do not access their region.

Note2: For details of Single Chip Mode and Single Boot Mode, refer to "Flash Memory" in the Reference Manual.

Downloaded from Arrow.com.

3.1. List of Memory Sizes

Table 3.1 Memory sizes and addresses

Products			TMPM4MNFYADFG TMPM4MNFYAFG TMPM4MMFYAFG TMPM4MLFYAUG TMPM4MLFYAFG	TMPM4MNFWADFG TMPM4MNFWAFG TMPM4MMFWAFG TMPM4MLFWAUG TMPM4MLFWAFG
Peripheral region	Code Flash (Mirror)	Size	256KB	128KB
		START	0x5E000000	0x5E000000
		END	0x5E03FFFF	0x5E01FFFF
SRAM region	Data Flash	Size	32KB	
		START	0x30000000	
		END	0x30007FFF	
	RAM	Size	24KB	
		START	0x20000000	
		END	0x20005FFF	
Code region	Code Flash	Size	256KB	128KB
		START	0x00000000	0x00000000
		END	0x0003FFFF	0x0001FFFF

Downloaded from Arrow.com.

4. Pin Description

4.1. Functional Pin Name and Functions

4.1.1. Function Pins of Peripheral

Table 4.1 Pin names and functions of peripheral pins

Peripheral function	Pin name	Input or Output	Function
Interrupt control (IA/IB)	INTx	Input	External interrupt input pin External input pin provides the noise filter (filter width: Typ. 30 ns).
32-bit Timer event counter (T32A)	T32AxINA0	Input	16-bit timer A input capture input pin 0
	T32AxINA1	Input	16-bit timer A input capture input pin 1
	T32AxOUTA	Output	16-bit timer A output pin
	T32AxINB0	Input	16-bit timer B input capture input pin 0
	T32AxINB1	Input	16-bit timer B input capture input pin 1
	T32AxOUTB	Output	16-bit timer B output pin
	T32AxINC0	Input	32-bit timer input capture input pin 0
	T32AxINC1	Input	32-bit timer input capture input pin 1
	T32AxOUTC	Output	32-bit timer output pin
Serial peripheral interface (TSPI)	TSPIxCSIN	Input	Chip select input pin
	TSPIxCS0	Output	Chip select output pin 0
	TSPIxCS1	Output	Chip select output pin 1
	TSPIxRXD	Input	Data input pin
	TSPIxTXD	Output	Data output pin
	TSPIxSCK	I/O	Clock input/output pin
Asynchronous serial communication circuit (UART)	UTxRXD	Input	Data input pin
	UTxTXDA	Output	Data output pin A
	UTxCTS_N	Input	Clear to send signal pin
	UTxRTS_N	Output	Request to send signal pin
I^2C interface (I2C / EI2C)	I2CxSDA / EI2CxSDA	I/O	Data input/output pin
	I2CxSCL / EI2CxSCL	I/O	Clock input/output pin
CAN Controller (CAN)	CANxTX	Output	CAN data output pin
	CANxRX	Input	CAN data input pin

Downloaded from Arrow.com.

Peripheral function	Pin name	Input or Output	Function
Advanced Programmable Motor Control Circuit (A-PMD)	EMGx	Input	Emergency state detection input pin
	OVVx	Input	Overvoltage detection input pin
	UOx	Output	U-phase output pin
	VOx	Output	V-phase output pin
	WOx	Output	W-phase output pin
	XOx	Output	X-phase output pin
	YOx	Output	Y-phase output pin
	ZOx	Output	Z-phase output pin
	PMDxDBG	Output	Debug output pin for motor control
Advanced Encoder Input Circuit (32-bit) (A-ENC32)	ENCxA	Input	Encoder input pin A
	ENCxB	Input	Encoder input pin B
	ENCxZ	Input	Encoder input pin Z
Analog to Digital Converter (ADC)	AINAx, AINBx, AINCx	Input	Analog input pin
Trigger input (TRGSEL)	TRGINx	Input	External trigger input pin

Note: "x" means channel number, unit number or interrupt number.

Downloaded from Arrow.com.

4.1.2. Debug Pins

Table 4.2 Debug pin names and their function

Debug PORT	Pin name	Input or Output	Function
JTAG	TMS	Input	JTAG test mode selection input pin
	TCK	Input	JTAG serial clock input pin
	TDO	Output	JTAG serial data output pin
	TDI	Input	JTAG serial data input pin
	TRST_N	Input	JTAG test reset input pin
SW	SWDIO	I/O	Serial wire data input/output pin
	SWCLK	Input	Serial wire clock input pin
	SWV	Output	Serial wire viewer output pin
TRACE	TRACECLK	Output	Trace clock output pin
	TRACEDATA0	Output	Trace data output pin 0
	TRACEDATA1	Output	Trace data output pin 1
	TRACEDATA2	Output	Trace data output pin 2
	TRACEDATA3	Output	Trace data output pin 3
NBDIF	NBDSYNC	Input	Non break debug synchronous input pin
	NBDCLK	Input	Non break debug clock input pin
	NBDDATA0	I/O	Non break debug data output pin 0
	NBDDATA1	I/O	Non break debug data output pin 1
	NBDDATA2	I/O	Non break debug data output pin 2
	NBDDATA3	I/O	Non break debug data output pin 3

Downloaded from Arrow.com.

4.1.3. Control Pins

Table 4.3 Control pin names and their function

	Pin name	Input or Output	Function
Control Pin	X1	Input	High speed oscillator connection pin
	X2	Output	High speed oscillator connection pin
	EHCLKIN	Input	External Clock signal input pin
	BOOT_N	Input	BOOT mode control pin The BOOT mode control pin is sampled on the rising edge of the RESET_N input. It's not sampled by internal Reset factor. If the BOOT mode control pin is "Low" level, the MCU enters single boot mode. If it is "High", the MCU enters single chip mode. For details, refer to "Flash Memory" of Reference Manual.
	RESET_N	Input	Reset signal input pin
	MODE	Input	Mode Pin This pin must be fixed to "Low" level.

4.1.4. Power Supply Pins

Table 4.4 Power supply pin names and their function

	Pin name	Function
Power Supply	DVDD5A (Note1) DVDD5B (Note1)	Power supply pin for digital DVDD5A/B supplies the power to the following pins: PA to PH, PN, PU, PV, MODE, RESET_N, BOOT_N A power supply is supplied to an oscillating circuit from a built-in regulator. X1, X2
	DVSSA (Note2) DVSSB (Note2) DVSSC (Note2)	GND pin for digital
	REGOUT1 (Note3)	Capacitor for a regulator connection pin (Note4)
	REGOUT2 (Note3)	Capacitor for a regulator connection pin (Note4)
	AVDD5 VREFH	Power supply pin for analog and reference power pin for analog (VREFH). AVDD5 supplies the power to the following pins: PL, PM, PK, PJ
	AVSS VREFL	GND pin for analog and reference GND pin for analog (VREFL)

Note1: Apply the voltage to DVDD5A and DVDD5B at the same potential except the case that the pins are not provided.

Note2: Apply the external voltage to DVSSA, DVSSB, and DVSSC at the same potential except the case that the pins are not provided.

Note3: For REGOUT1 and REGOUT2, do not cause a short circuit with DVDD5A, DVDD5B, or DVSSA, DVSSB, or DVSSC.

Note4: For the capacitor value, refer to the "7.12. Regulator"

Downloaded from Arrow.com.

4.1.5. Capacitors between power supply pins

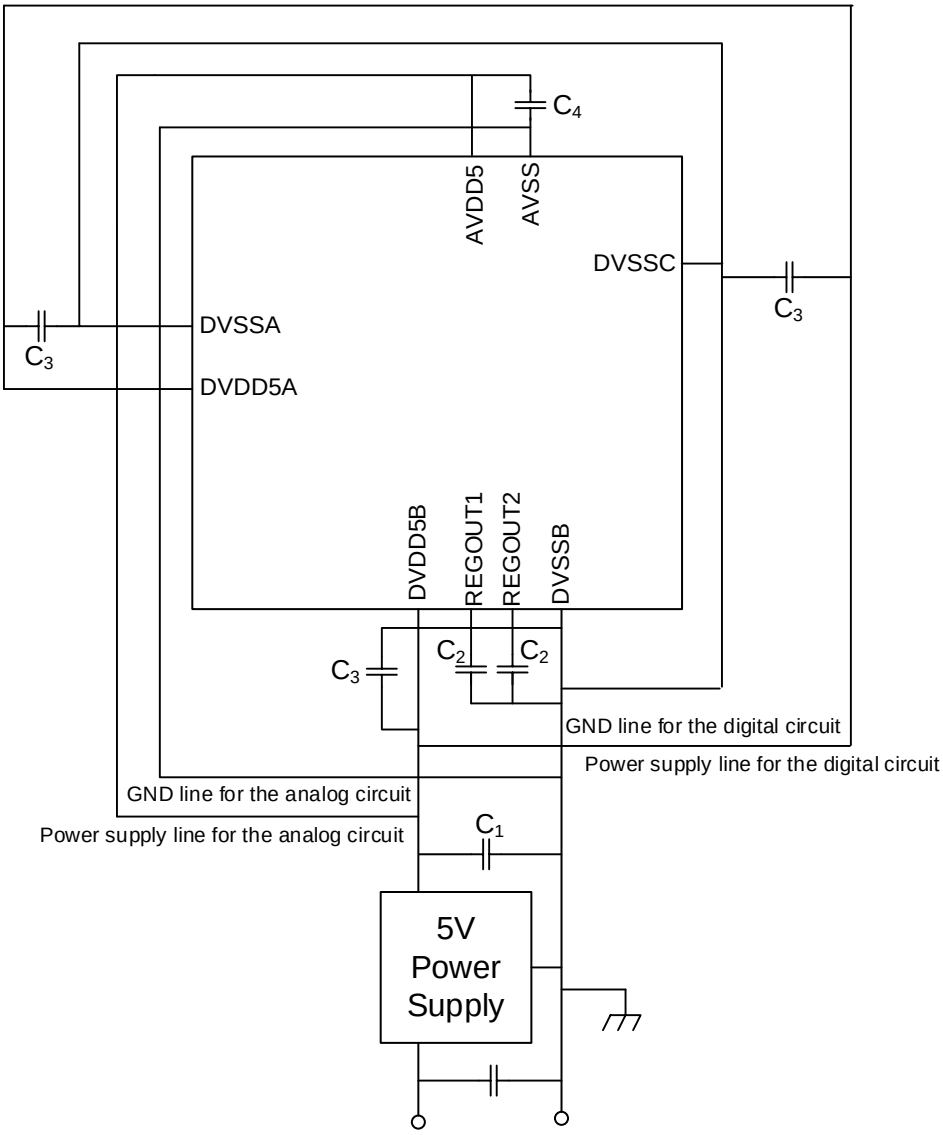

Figure 4.1 Capacitors for power supply pins connection circuit

Note1: Insert a ceramic capacitor (C_1) near the output terminal of the 5V power supply. The power gradient with C_1 must be satisfied V_{PON} and V_{POFF} in "7.6. Characteristics of Internal processing at RESET".

Note2: Insert the bypass capacitor ((C_3, C_4:0.01μF to 0.1μF) between the power supply and GND near each MCU power supply pin.

Note3: Insert the power supply stabilizing ceramic capacitor (C_2) of the same capacity into the capacitor connection pin for the internal regulator (REGOUT1, REGOUT2). The capacitor should be placed near DVSSB pin. Regarding value of capacitor, refer to "7.12. Regulator".

Note4: In order to suppress noise mixing from the digital power supply to the analog circuit, separate the analog power supply line and the digital power supply line near the 5V power supply output.

Note5: In order to suppress noise mixing from the peripheral circuit to the analog circuit, when inserting a filter circuit or pull-up / down resistor to the input / output terminal of the analog power supply system, connect the components that make up these circuits to the analog power supply line.

Note6: In order to suppress high frequency noise received from the loop circuit by the power supply line, the GND line and the capacitor, do not separate the power supply line and the GND line from each other.

Downloaded from Arrow.com.

4.2. Functional Pin and Ports Assignment (Pin Number)

Following table shows a pin number of the port assignment and each product which were seen from the functional pin. "-" means that it not have a pin or there is no assignment of a function.

Table 4.5 Signal connection List: UART

Function	Combination functional pin name	Port name	M4MN (QFP100)	M4MN (LQFP100)	M4MM (LQFP80)	M4ML (LQFP64)
UART ch0	UT0RXD	PC0	49	46	39	31
		PC1	50	47	40	32
		PN0	12	9	9	-
		PN1	13	10	10	-
	UT0TXDA	PC1	50	47	40	32
		PC0	49	46	39	31
		PN1	13	10	10	-
		PN0	12	9	9	-
	UT0CTS_N	PD2	69	66	-	-
		PN2	14	11	11	-
	UT0RTS_N	PD3	70	67	-	-
		PV1	16	13	-	-
UART ch1	UT1RXD	PC4	53	50	43	-
		PC5	54	51	44	-
		PU5	9	6	7	7
		PU6	10	7	8	8
	UT1TXDA	PC5	54	51	44	-
		PC4	53	50	43	-
		PU6	10	7	8	8
		PU5	9	6	7	7
	UT1CTS_N	PU4	8	5	6	6
	UT1RTS_N	PU3	7	4	5	5
UART ch2	UT2RXD	PF0	3	100	1	1
		PF1	2	99	80	64
		PU0	4	1	2	2
		PU1	5	2	3	3
	UT2TXDA	PF1	2	99	80	64
		PF0	3	100	1	1
		PU1	5	2	3	3
		PU0	4	1	2	2
UART ch3	UT3RXD	PF3	100	97	79	-
		PF4	99	96	78	-
		PF6	97	94	77	-
		PF7	96	93	76	-
	UT3TXDA	PF4	99	96	78	-
		PF3	100	97	79	-
		PF7	96	93	76	-
		PF6	97	94	77	-

Downloaded from Arrow.com.

Table 4.6 Signal connection List: I2C/EI2C/TSPI/CAN

Function	Combination functional pin name	Port name	M4MN (QFP100)	M4MN (LQFP100)	M4MM (LQFP80)	M4ML (LQFP64)
I2C ch0	I2C0SDA	PC0	49	46	39	31
	I2C0SCL	PC1	50	47	40	32
I2C ch1	I2C1SDA	PD3	70	67	-	-
		PU0	4	1	2	2
	I2C1SCL	PD4	71	68	-	-
		PU1	5	2	3	3
EI2C ch0	EI2C0SDA	PC0	49	46	39	31
	EI2C0SCL	PC1	50	47	40	32
EI2C ch1	EI2C1SDA	PD3	70	67	-	-
		PU0	4	1	2	2
	EI2C1SCL	PD4	71	68	-	-
		PU1	5	2	3	3
TSPI ch0	TSPI0RXD	PA2	20	17	15	10
		PC3	52	49	42	34
	TSPI0TXD	PA3	21	18	16	11
		PC4	53	50	43	-
	TSPI0SCK	PA4	22	19	17	12
		PC5	54	51	44	-
	TSPI0CSIN	PA0	18	15	13	-
		PC7	56	53	-	-
	TSPI0CS0	PC2	51	48	41	33
	TSPI0CS1	PA1	19	16	14	-
		PC6	55	52	-	-
TSPI ch1	TSPI1RXD	PG4	77	74	58	46
		PV1	16	13	-	-
	TSPI1TXD	PG5	78	75	59	47
	TSPI1SCK	PG6	79	76	60	48
	TSPI1CSIN	PG3	76	73	57	45
		PV0	15	12	-	-
	TSPI1CS0	PG2	75	72	56	44
	TSPI1CS1	PG1	74	71	55	-
CAN	CANARX	PE1	81	78	62	50
		PA4	22	19	17	12
	CANATX	PE0	80	77	61	49
		PA3	21	18	16	11

Downloaded from Arrow.com.

Table 4.7 Signal connection List: T32A ch0,1,2

Function	Combination functional pin name	Port name	M4MN (QFP100)	M4MN (LQFP100)	M4MM (LQFP80)	M4ML (LQFP64)
T32A ch0	T32A00INA0	PA2	20	17	15	10
	T32A00OUTA	PA3	21	18	16	11
	T32A00INB0	PA0	18	15	13	-
	T32A00INB1	PA1	19	16	14	-
	T32A00OUTB	PA4	22	19	17	12
	T32A00INC0	PA2	20	17	15	10
	T32A00OUTC	PA3	21	18	16	11
T32A ch1	T32A01INA0	PF3	100	97	79	-
	T32A01INA1	PF5	98	95	-	-
	T32A01OUTA	PF4	99	96	78	-
	T32A01INB0	PF6	97	94	77	-
	T32A01INB1	PF7	96	93	76	-
	T32A01OUTB	PV0	15	12	-	-
	T32A01INC0	PF3	100	97	79	-
	T32A01INC1	PF5	98	95	-	-
	T32A01OUTC	PF4	99	96	78	-
T32A ch2	T32A02INA0	PC0	49	46	39	31
		PU1	5	2	3	3
	T32A02INA1	PC6	55	52	-	-
		PU5	9	6	7	7
	T32A02OUTA	PC1	50	47	40	32
		PU2	6	3	4	4
	T32A02INB0	PC7	56	53	-	-
		PU3	7	4	5	5
	T32A02INB1	PD0	67	64	-	-
		PU0	4	1	2	2
	T32A02OUTB	PD1	68	65	-	-
		PU4	8	5	6	6
	T32A02INC0	PC0	49	46	39	31
		PU1	5	2	3	3
	T32A02INC1	PC6	55	52	-	-
		PU4	8	5	6	6
	T32A02OUTC	PC1	50	47	40	32
		PU2	6	3	4	4

Downloaded from Arrow.com.

Table 4.8 Signal connection List: T32A ch3,4,5

Function	Combination functional pin name	Port name	M4MN (QFP100)	M4MN (LQFP100)	M4MM (LQFP80)	M4ML (LQFP64)
T32A ch3	T32A03INA0	PD2	69	66	-	-
		PE1	81	78	62	50
	T32A03INA1	PD3	70	67	-	-
		PE3	83	80	64	52
	T32A03OUTA	PC2	51	48	41	33
		PE2	82	79	63	51
	T32A03INB0	PD4	71	68	-	-
		PE4	84	81	65	53
	T32A03INB1	PD5	72	69	-	-
		PE5	85	82	66	54
	T32A03OUTB	PC3	52	49	42	34
		PE6	86	83	67	55
	T32A03INC0	PD2	69	66	-	-
		PE1	81	78	62	50
	T32A03INC1	PD3	70	67	-	-
		PE3	83	80	64	52
	T32A03OUTC	PC2	51	48	41	33
		PE2	82	79	63	51
T32A ch4	T32A04INA0	PG0	73	70	54	-
	T32A04INA1	PG1	74	71	55	-
	T32A04OUTA	PG2	75	72	56	44
	T32A04INB0	PG4	77	74	58	46
	T32A04INB1	PG5	78	75	59	47
	T32A04OUTB	PG3	76	73	57	45
	T32A04INC0	PG0	73	70	54	-
	T32A04INC1	PG1	74	71	55	-
	T32A04OUTC	PG2	75	72	56	44
T32A ch5	T32A05INA0	PF0	3	100	1	1
		PN0	12	9	9	-
	T32A05INA1	PF2	1	98	-	-
		PN2	14	11	11	-
	T32A05OUTA	PF1	2	99	80	64
		PN1	13	10	10	-
	T32A05INC0	PF0	3	100	1	1
		PN0	12	9	9	-
	T32A05INC1	PF2	1	98	-	-
		PN2	14	11	11	-
	T32A05OUTC	PF1	2	99	80	64
		PN1	13	10	10	-

Downloaded from Arrow.com.

Table 4.9 Signal connection List: ADC

Function	Combination functional pin name	Port name	M4MN (QFP100)	M4MN (LQFP100)	M4MM (LQFP80)	M4ML (LQFP64)
ADC unit A	AINA05	PM2	33	30	-	-
	AINA06	PM1	32	29	-	-
	AINA07	PM0	31	28	-	-
	AINA08	PL7	30	27	25	20
	AINA09	PL6	29	26	24	19
	AINA13	PL5	28	25	23	18
	AINA14	PL3	26	23	21	16
	AINA15	PL1	24	21	19	14
	AINA16	PL0	23	20	18	13
	AINA17	PL2	25	22	20	15
	AINA18	PL4	27	24	22	17
ADC unit B	AINB00	PK0	42	39	34	27
	AINB01	PK1	41	38	33	26
	AINB02	PK2	40	37	32	25
	AINB03	PK3	39	36	31	-
	AINB04	PK4	38	35	30	-
ADC unit C	AINC00	PJ0	48	45	38	30
	AINC01	PJ1	47	44	37	29
	AINC02	PJ2	46	43	36	28
	AINC03	PJ3	45	42	35	-
	AINC04	PJ4	44	41	-	-
	AINC05	PJ5	43	40	-	-

Downloaded from Arrow.com.

Table 4.10 Signal connection List: INT

Function	Combination functional pin name	Port name	M4MN (QFP100)	M4MN (LQFP100)	M4MM (LQFP80)	M4ML (LQFP64)
INT	INT00	PA2	20	17	15	10
	INT01b	PA3	21	18	16	11
	INT01a	PA4	22	19	17	12
	INT02a	PC1	50	47	40	32
	INT02b	PC6	55	52	-	-
	INT03a	PC3	52	49	42	34
	INT03b	PD2	69	66	-	-
	INT04b	PE1	81	78	62	50
	INT04a	PE3	83	80	64	52
	INT05a (Note)	PE5	85	82	66	54
	INT05b	PE6	86	83	67	55
	INT06a	PF1	2	99	80	64
	INT06b	PF2	1	98	-	-
	INT07a	PU1	5	2	3	3
	INT07b	PU2	6	3	4	4
	INT08a	PU3	7	4	5	5
	INT08b	PU4	8	5	6	6
	INT09	PU6	10	7	8	8
	INT10	PC2	51	48	41	33
	INT11a	PE4	84	81	65	53
	INT11b (Note)	PE5	85	82	66	54
	INT12	PU0	4	1	2	2
	INT13	PU5	9	6	7	7
	INT14a	PF4	99	96	78	-
	INT14b	PF5	98	95	-	-
	INT15	PA1	19	16	14	-
	INT16a	PN1	13	10	10	-
	INT16b	PN2	14	11	11	-
	INT17b	PD0	67	64	-	-
	INT17a	PD1	68	65	-	-
	INT18b	PD4	71	68	-	-
	INT18a	PD5	72	69	-	-
	INT21	PG3	76	73	57	45

Note: INT05a and INT11b are assigned to PE5.

Downloaded from Arrow.com.

Table 4.11 Signal connection List: A-PMD/A-ENC32

Function	Combination functional pin name	Port name	M4MN (QFP100)	M4MN (LQFP100)	M4MM (LQFP80)	M4ML (LQFP64)
A-PMD ch0	EMG0	PB6	63	60	51	41
	OVV0	PB7	64	61	-	-
	UO0	PB0	57	54	45	35
	VO0	PB2	59	56	47	37
	WO0	PB4	61	58	49	39
	XO0	PB1	58	55	46	36
	YO0	PB3	60	57	48	38
	ZO0	PB5	62	59	50	40
	PMD0DBG	PB7	64	61	-	-
		PC2	51	48	41	33
A-PMD ch1	EMG1	PE6	86	83	67	55
	OVV1	PE7	87	84	-	-
	UO1	PE0	80	77	61	49
	VO1	PE2	82	79	63	51
	WO1	PE4	84	81	65	53
	XO1	PE1	81	78	62	50
	YO1	PE3	83	80	64	52
	ZO1	PE5	85	82	66	54
	PMD1DBG	PC3	52	49	42	34
		PE7	87	84	-	-
A-PMD ch2	EMG2	PU6	10	7	8	8
	OVV2	PU7	11	8	-	-
	UO2	PU0	4	1	2	2
	VO2	PU2	6	3	4	4
	WO2	PU4	8	5	6	6
	XO2	PU1	5	2	3	3
	YO2	PU3	7	4	5	5
	ZO2	PU5	9	6	7	7
	PMD2DBG	PA2	20	17	15	10
		PU7	11	8	-	-
A-ENC32 ch0	ENC0A	PN0	12	9	9	-
	ENC0B	PN1	13	10	10	-
	ENC0Z	PN2	14	11	11	-
A-ENC32 ch1	ENC1A	PF3	100	97	79	-
	ENC1B	PF4	99	96	78	-
	ENC1Z	PF5	98	95	-	-
A-ENC32 ch2	ENC2A	PD3	70	67	-	-
		PU3	7	4	5	5
	ENC2B	PD4	71	68	-	-
		PU5	9	6	7	7
	ENC2Z	PD5	72	69	-	-
		PU6	10	7	8	8

Downloaded from Arrow.com.

Table 4.12 Signal connection List: TRGSEL/JTAG/SW/TRACE/NBDIF/Control pin

Function	Combination functional pin name	Port name	M4MN (QFP100)	M4MN (LQFP100)	M4MM (LQFP80)	M4ML (LQFP64)
TRGSEL	TRGIN0	PA2	20	17	15	10
	TRGIN1	PA3	21	18	16	11
	TRGIN2	PA4	22	19	17	12
JTAG	TMS	PF0	3	100	-	-
	TCK	PF1	2	99	-	-
	TDO	PF2	1	98	-	-
	TDI	PF3	100	97	-	-
	TRST_N	PF4	99	96	-	-
SW	SWDIO	PF0	3	100	1	1
	SWCLK	PF1	2	99	80	64
	SWV	PF2	1	98	-	-
TRACE	TRACECLK	PF5	98	95	-	-
	TRACEDATA0	PF6	97	94	-	-
	TRACEDATA1	PF7	96	93	-	-
	TRACEDATA2	PN0	12	9	-	-
	TRACEDATA3	PN1	13	10	-	-
NBDIF	NBDSYNC	PF4	99	96	-	-
	NBDCLK	PF5	98	95	-	-
	NBDDATA0	PF6	97	94	-	-
	NBDDATA1	PF7	96	93	-	-
	NBDDATA2	PN0	12	9	-	-
	NBDDATA3	PN1	13	10	-	-
Control pin	X1	PH0	93	90	73	61
	X2	PH1	94	91	74	62
	EHCLKIN	PH0	93	90	73	61
	BOOT_N	PG2	75	72	56	44
	RESET_N		95	92	75	63
	MODE		92	89	72	60

Downloaded from Arrow.com.

4.3. Ports

The symbols of each table of the port have the following meanings.

- Input/Output: Input and/or Output of Port
  Input: Input port
  Output: Output port
  I/O: Input/Output port

- PU/PD: Programmable pull-up/pull-down
  PU: Programmable pull-up is selectable
  PD: Programmable pull-down is selectable

- OD: Programmable open-drain output
  Yes: Support
  No: Non support

- 5V_T: 5V-tolerant
  Yes: Support
  N/A: Not available

- SMT/CMOS: Input gate
  SMT: Schmitt trigger input
  CMOS: CMOS input

- State under Reset: Port state under Reset
  Hi-Z: High impedance
  PU: Pull-up
  PD: Pull-down

- State after Reset: Port state after Reset
  Hi- Z: High impedance
  PU: Pull-up
  PD: Pull-down

Downloaded from Arrow.com.

4.3.1. Port Specification Table

Table 4.13 Pin numbers, and specifications of Port A, B, C, D

Port Name	Input/Output	PU/PD	OD	5V_T	SMT/ CMOS	Under Reset	After Reset
PA0	I/O	PU/PD	YES	N/A	SMT	Hi-Z	Hi-Z
PA1	I/O	PU/PD	YES	N/A	SMT	Hi-Z	Hi-Z
PA2	I/O	PU/PD	YES	N/A	SMT	Hi-Z	Hi-Z
PA3	I/O	PU/PD	YES	N/A	SMT	Hi-Z	Hi-Z
PA4	I/O	PU/PD	YES	N/A	SMT	Hi-Z	Hi-Z
PB0	I/O	PU/PD	YES	N/A	SMT	Hi-Z	Hi-Z
PB1	I/O	PU/PD	YES	N/A	SMT	Hi-Z	Hi-Z
PB2	I/O	PU/PD	YES	N/A	SMT	Hi-Z	Hi-Z
PB3	I/O	PU/PD	YES	N/A	SMT	Hi-Z	Hi-Z
PB4	I/O	PU/PD	YES	N/A	SMT	Hi-Z	Hi-Z
PB5	I/O	PU/PD	YES	N/A	SMT	Hi-Z	Hi-Z
PB6	I/O	PU/PD	YES	N/A	SMT	Hi-Z	Hi-Z
PB7	I/O	PU/PD	YES	N/A	SMT	Hi-Z	Hi-Z
PC0	I/O	PU/PD	YES	YES	SMT	Hi-Z	Hi-Z
PC1	I/O	PU/PD	YES	YES	SMT	Hi-Z	Hi-Z
PC2	I/O	PU/PD	YES	N/A	SMT	Hi-Z	Hi-Z
PC3	I/O	PU/PD	YES	N/A	SMT	Hi-Z	Hi-Z
PC4	I/O	PU/PD	YES	N/A	SMT	Hi-Z	Hi-Z
PC5	I/O	PU/PD	YES	N/A	SMT	Hi-Z	Hi-Z
PC6	I/O	PU/PD	YES	N/A	SMT	Hi-Z	Hi-Z
PC7	I/O	PU/PD	YES	N/A	SMT	Hi-Z	Hi-Z
PD0	I/O	PU/PD	YES	N/A	SMT	Hi-Z	Hi-Z
PD1	I/O	PU/PD	YES	N/A	SMT	Hi-Z	Hi-Z
PD2	I/O	PU/PD	YES	N/A	SMT	Hi-Z	Hi-Z
PD3	I/O	PU/PD	YES	YES	SMT	Hi-Z	Hi-Z
PD4	I/O	PU/PD	YES	YES	SMT	Hi-Z	Hi-Z
PD5	I/O	PU/PD	YES	N/A	SMT	Hi-Z	Hi-Z

Downloaded from Arrow.com.

Table 4.14 Pin numbers, and specifications of Port E, F, G, H

Port Name	Input/Output	PU/PD	OD	5V_T	SMT/ CMOS	Under Reset	After Reset
PE0	I/O	PU/PD	YES	N/A	SMT	Hi-Z	Hi-Z
PE1	I/O	PU/PD	YES	N/A	SMT	Hi-Z	Hi-Z
PE2	I/O	PU/PD	YES	N/A	SMT	Hi-Z	Hi-Z
PE3	I/O	PU/PD	YES	N/A	SMT	Hi-Z	Hi-Z
PE4	I/O	PU/PD	YES	N/A	SMT	Hi-Z	Hi-Z
PE5	I/O	PU/PD	YES	N/A	SMT	Hi-Z	Hi-Z
PE6	I/O	PU/PD	YES	N/A	SMT	Hi-Z	Hi-Z
PE7	I/O	PU/PD	YES	N/A	SMT	Hi-Z	Hi-Z
PF0	I/O	PU/PD	YES	N/A	SMT	PU(Note2)	PU(Note2)
PF1	I/O	PU/PD	YES	N/A	SMT	PD(Note2)	PD(Note2)
PF2	I/O	PU/PD	YES	N/A	SMT	Hi-Z (Note2)	Hi-Z (Note2)
PF3	I/O	PU/PD	YES	N/A	SMT	PU(Note2)	PU(Note2)
PF4	I/O	PU/PD	YES	N/A	SMT	PU(Note2)	PU(Note2)
PF5	I/O	PU/PD	YES	N/A	SMT	Hi-Z	Hi-Z
PF6	I/O	PU/PD	YES	N/A	SMT	Hi-Z	Hi-Z
PF7	I/O	PU/PD	YES	N/A	SMT	Hi-Z	Hi-Z
PG0	I/O	PU/PD	YES	N/A	SMT	Hi-Z	Hi-Z
PG1	I/O	PU/PD	YES	N/A	SMT	Hi-Z	Hi-Z
PG2	Output	PU/PD (Note1)	YES	N/A	SMT	Hi-Z (Note1)	Hi-Z
PG3	I/O	PU/PD	YES	N/A	SMT	Hi-Z	Hi-Z
PG4	I/O	PU/PD	YES	N/A	SMT	Hi-Z	Hi-Z
PG5	I/O	PU/PD	YES	N/A	SMT	Hi-Z	Hi-Z
PG6	I/O	PU/PD	YES	N/A	SMT	Hi-Z	Hi-Z
PH0	Input	PD	NO	N/A	SMT	Hi-Z	Hi-Z
PH1	Input	PD	NO	N/A	SMT	Hi-Z	Hi-Z

Note1: Combination with BOOT_N. When RESET_N=0, Pull-up resistor is enabled.
When RESET_N=1, the pin state is Hi-Z with internal reset.

Note2: It is assigned to a debugging pin in the state of the initial stage. (PF3: TDI, PF2: TDO/SWV, PF0: TMS/SWDIO, PF1: TCK/SWCLK, PF4: TRST_N)
When receiving the command from TOOL, PF2: TDO/SWV becomes output.

Downloaded from Arrow.com.

Table 4.15 Pin numbers, and specifications of Port J, K, L

Port Name	Input/Output	PU/PD	OD	5V_T	SMT/ CMOS	Under Reset	After Reset
PJ0	I/O	PU/PD	YES	N/A	SMT	Hi-Z	Hi-Z
PJ1	I/O	PU/PD	YES	N/A	SMT	Hi-Z	Hi-Z
PJ2	I/O	PU/PD	YES	N/A	SMT	Hi-Z	Hi-Z
PJ3	I/O	PU/PD	YES	N/A	SMT	Hi-Z	Hi-Z
PJ4	I/O	PU/PD	YES	N/A	SMT	Hi-Z	Hi-Z
PJ5	I/O	PU/PD	YES	N/A	SMT	Hi-Z	Hi-Z
PK0	I/O	PU/PD	YES	N/A	SMT	Hi-Z	Hi-Z
PK1	I/O	PU/PD	YES	N/A	SMT	Hi-Z	Hi-Z
PK2	I/O	PU/PD	YES	N/A	SMT	Hi-Z	Hi-Z
PK3	I/O	PU/PD	YES	N/A	SMT	Hi-Z	Hi-Z
PK4	I/O	PU/PD	YES	N/A	SMT	Hi-Z	Hi-Z
PL0	I/O	PU/PD	YES	N/A	SMT	Hi-Z	Hi-Z
PL1	I/O	PU/PD	YES	N/A	SMT	Hi-Z	Hi-Z
PL2	I/O	PU/PD	YES	N/A	SMT	Hi-Z	Hi-Z
PL3	I/O	PU/PD	YES	N/A	SMT	Hi-Z	Hi-Z
PL4	I/O	PU/PD	YES	N/A	SMT	Hi-Z	Hi-Z
PL5	I/O	PU/PD	YES	N/A	SMT	Hi-Z	Hi-Z
PL6	I/O	PU/PD	YES	N/A	SMT	Hi-Z	Hi-Z
PL7	I/O	PU/PD	YES	N/A	SMT	Hi-Z	Hi-Z

Downloaded from Arrow.com.

Table 4.16 Pin numbers, and specifications of Port M, N, U, V

Port Name	Input/Output	PU/PD	OD	5V_T	SMT/ CMOS	Under Reset	After Reset
PM0	I/O	PU/PD	YES	N/A	SMT	Hi-Z	Hi-Z
PM1	I/O	PU/PD	YES	N/A	SMT	Hi-Z	Hi-Z
PM2	I/O	PU/PD	YES	N/A	SMT	Hi-Z	Hi-Z
PN0	I/O	PU/PD	YES	N/A	SMT	Hi-Z	Hi-Z
PN1	I/O	PU/PD	YES	N/A	SMT	Hi-Z	Hi-Z
PN2	I/O	PU/PD	YES	N/A	SMT	Hi-Z	Hi-Z
PU0	I/O	PU/PD	YES	YES	SMT	Hi-Z	Hi-Z
PU1	I/O	PU/PD	YES	YES	SMT	Hi-Z	Hi-Z
PU2	I/O	PU/PD	YES	N/A	SMT	Hi-Z	Hi-Z
PU3	I/O	PU/PD	YES	N/A	SMT	Hi-Z	Hi-Z
PU4	I/O	PU/PD	YES	N/A	SMT	Hi-Z	Hi-Z
PU5	I/O	PU/PD	YES	N/A	SMT	Hi-Z	Hi-Z
PU6	I/O	PU/PD	YES	N/A	SMT	Hi-Z	Hi-Z
PU7	I/O	PU/PD	YES	N/A	SMT	Hi-Z	Hi-Z
PV0	I/O	PU/PD	YES	N/A	SMT	Hi-Z	Hi-Z
PV1	I/O	PU/PD	YES	N/A	SMT	Hi-Z	Hi-Z

Downloaded from Arrow.com.

5. Functional Description and Operation Description

5.1. Reference Manuals

For more information on product of TMPM4M Group(1), please refer to Reference Manuals below;

Table 5.1 Reference Manuals for TMPM4M Group(1)

Reference Manual	IP Symbol	Category
Input/Output Ports (TMPM4M Group(1))	PORT-M4M(1)	System
Exception (TMPM4M Group(1))	EXCEPT-M4M(1)	System
Clock Control and Operation Mode (TMPM4M Group(1))	CG-M4M(1)-E	System
Product Information (TMPM4M Group(1))	PINFO-M4M(1)	System
Flash Memory	FLASH512UD32-B	Peripheral
Trimming Circuit	TRM-B	Peripheral
Oscillation Frequency Detector	OFD-A	Peripheral
Voltage Detection Circuit	LVD-D	Peripheral
Digital Noise Filter Circuit	DNF-A	Peripheral
Debug Interface	DEBUG-A	Peripheral
Non Break Debug Interface	NBDIF-A	Peripheral
DMA Controller	DMAC-B	Peripheral
Asynchronous Serial Communication Circuit	UART-C	Peripheral
Serial Peripheral Interface	TSPI-E	Peripheral
I^2C Interface	I2C-B	Peripheral
I^2C Interface Version A	EI2C-A	Peripheral
CAN Controller	CAN-B	Peripheral
12-bit Analog to Digital Converter	ADC-I	Peripheral
Operational Amplifier	OPAMP-B	Peripheral
Advanced Programmable Motor Control Circuit	A-PMD-A	Peripheral
Advanced Encoder Input Circuit (32-bit)	A-ENC32-A	Peripheral
Advanced Vector Engine Plus	A-VE+-B	Peripheral
32-bit Timer Event Counter	T32A-C	Peripheral
Clock Selective Watchdog Timer	SIWDT-A	Peripheral
CRC Calculation Circuit	CRC-A	Peripheral
RAM Parity	RAMP-B	Peripheral

Downloaded from Arrow.com.

5.2. Processor Core

The TMPM4M Group(1) incorporates a high-performance 32-bit processor core (Arm Cortex-M4 processor with FPU).

For the operation of the processor core, refer to "the Arm documentation set for Cortex-M series processors". This section explains the product-specific information.

5.2.1. Core Information

The revision of Cortex-M4 processor with FPU used in the TMPM4M Group(1) is shown as below:

For details of the CPU core and the architecture, refer to the documentation of the Arm in the following URL:

http://infocenter.arm.com/help/index.jsp

Table 5.2 Core revision

Group name	Core revision
TMPM4M Group(1)	r0p1

5.2.2. Configurable Options

In the Cortex-M4 processor with FPU, some blocks can be selected to implement. The following table shows the configurations of the TMPM4M Group(1).

Table 5.3 Configurable options and their implementations

Configurable option	Implementation
FWB	Literal comparator: 2 Instruction comparator: 6
DWT	Comparator: 4
ITM	Available
MPU	Available
ETM	Available
AHB-AP	Available
AHB trace macro cell interface	Not available
TPIU	Available
WIC	Not available
Debug port	JTAG/Serial wire
Bit band	Available
Sequential control of AHB	Not available

Downloaded from Arrow.com.

5.3. Clock Control and Operation Mode (CG)

The CG selects a clock gear ratio and the prescaler clock, or warm up time of the oscillator.

There are NORMAL mode and low-power consumption mode as operation modes. Power consumption can be decreased by mode transition.

The system clock consists of "High speed system clock" and "Middle speed system clock". The former is a high speed oscillation clock and the latter is generated by dividing High speed system clock.

The outline of the clock/mode control circuit is as follows:

- Internal high speed oscillator: 10MHz
- Selectable from the external high speed oscillator or internal high speed oscillator.
- PLL (Clock Multiplication Circuit)

  For System clock, Capable of 160 MHz output by changing the multiplication ratio according to the frequency of the high speed oscillation circuit.
- Clock gear:

  The high speed clock can be divided by 1, 2, 4, 8, or 16 and the clock is used as the system clock (fsys).
- Low-power consumption mode:

  IDLE: Only the CPU is stopped in this mode. Each peripheral circuit can enable or disable operation in the IDLE mode.

  STOP1: The system clock is stopped in this mode.

5.4. Flash Memory (Code FLASH, Data FLASH)

TMPM4M Group(1) has 256KB/128KB of Code flash and 32KB of Data flash.

The code flash stores instruction code, and CPU reads instruction code and executes. The data flash stores data, and even if a power supply is off, data can be kept.

It has the dual mode that possible to write and erase data flash while executing an order by a code flash. And it's also possible to continue executing an application program during writing or erasing data flash memory.

It has protection function which prohibits write or erase by the block unit and it has the security function which prohibits the reading of the program code by the 3rd person.

Downloaded from Arrow.com.

5.5. Oscillator

External High Speed Oscillator (EHOSC):
Connect crystal resonator or ceramic resonator to terminals. Use clock source for System clock.

Internal High Speed Oscillator 1 (IHOSC1):
The oscillation frequency is 10MHz. Use clock source for System clock.

Internal High Speed Oscillator 2 (IHOSC2):
The oscillation frequency is 10MHz. Use clock source for OFD and SIWDT.

Table 5.4 Built-in Oscillator

	M4MN	M4MM	M4ML
EHOSC	✓	✓	✓
IHOSC1	✓	✓	✓
IHOSC2	✓	✓	✓

Note: ✓: Available, -: N/A

5.6. Trimming Circuit (TRM)

The TRM can adjust oscillation frequency of the internal high speed oscillator 1(IHOSC1).

Table 5.5 Built-in TRM

	M4MN	M4MM	M4ML
TRM	✓	✓	✓

Note: ✓: Available, -: N/A

Downloaded from Arrow.com.

5.7. Oscillation Frequency Detection Circuit (OFD)

The OFD is a function that detects an abnormal state of the clock. It measures the external high speed oscillation (f_{EHOSC}) or high speed clock (fc) based on the internal reference clock (f_{IHOSC2}). If an oscillation or clock frequency is out of the specified range, a reset signal occurs.

The upper limit and the lower limit of detection frequency ranges can be specified.

Table 5.6 Built-in OFD

	M4MN	M4MM	M4ML
OFD	✓	✓	✓

Note: ✓: Available, -: N/A

5.8. Voltage Detection Circuit (LVD)

The LVD is a peripheral function that detects whether a power supply voltage is lower or higher than the preset voltage. When a low voltage or higher voltage than the preset voltage is detected, the LVD generates an interrupt request or reset the MCU.

Setting voltage can be chosen from eight kinds. LVD is set to enable from the Reset state at the Power on.

Table 5.7 Built-in LVD

	M4MN	M4MM	M4ML
LVD	✓	✓	✓

Note: ✓: Available, -: N/A

5.9. Digital Noise Filter circuit(DNF)

The DNF can eliminate the noise of input signals from external interrupt pins at the certain range. The noise of the High level / Low level input of the external interrupt signal INTx is removed.

Table 5.8 Number of DNF

	M4MN	M4MM	M4ML
Number of DNF	32	24	20

Note: INT05a and INT11b are assigned to same pin.

Downloaded from Arrow.com.

5.10. Debug Interface (DEBUG)

TMPM4M Group(1) contains interface for connecting debug tool, which is the Serial Wire Debug Port (SWCLK, SWDIO) and the JTAG Debug Port (TDI, TDO, TMS, TCK, TRST_N). These are connected with the Debug tool and used for program development. And also it contains the trace clock(TRACECLK) and data output (TRACEDATA0to3) to reduce the Debug Process.

TMPM4M Group(1) products support serial wire debug ports, JTAG debug ports, trace outputs, and NBDIF.

Table 5.9 Built-in Debug Interface

Debug function	Pin Name	PORT	M4MN	M4MM	M4ML
SW	SWDIO	PF0	✓	✓	✓
	SWCLK	PF1	✓	✓	✓
	SWV	PF2	✓	-	-
JTAG	TMS	PF0	✓	-	-
	TCK	PF1	✓	-	-
	TDO	PF2	✓	-	-
	TDI	PF3	✓	-	-
	TRST_N	PF4	✓	-	-
TRACE	TRACECLK	PF5	✓	-	-
	TRACEDATA0	PF6	✓	-	-
	TRACEDATA1	PF7	✓	-	-
	TRACEDATA2	PN0	✓	-	-
	TRACEDATA3	PN1	✓	-	-
NBDIF	NBDSYNC	PF4	✓	-	-
	NBDCLK	PF5	✓	-	-
	NBDDATA0	PF6	✓	-	-
	NBDDATA1	PF7	✓	-	-
	NBDDATA2	PN0	✓	-	-
	NBDDATA3	PN1	✓	-	-

Note: ✓: Available, -: N/A

5.10.1. Non Break Debug Interface (NBDIF)

Connecting debug tools supporting NBDIF can provide RAM monitor function.
NBDIF support vary depending on the product. Please refer to "Table 5.9 Built-in Debug Interface".

Downloaded from Arrow.com.

5.11. DMA Controller (DMAC)

The DMAC is the peripheral function to move the data between peripheral functions and the memory, or between memories. These operations are performed separately from the CPU control; thus, the CPU load can greatly be reduced by using the DMA.

TMPM4M Group(1) product has one DMA controller (DMAC) unit, and there are up to 32 channels of activation factors per unit.

Table 5.10 Built-in DMAC

Unit	M4MN	M4MM	M4ML
Unit A	✓	✓	✓

Note: ✓: Available, -: N/A

5.12. Asynchronous Serial Communication Circuit (UART)

The UART is asynchronous serial communication function. It can choose the data length of 7, 8 or 9bits, parity existence, and a STOP bit length function. Moreover, selection of the MSB first / LSB first and reversal of data polarity can be performed and Terminal exchanged of TXD/RXD can be performed in a Port setting.

The FIFO buffer supports data communication on 8-stage at transmission; and on 8-stage at reception. The telecommunication control by CTS/RTS is supported.

Table 5.11 Built-in UART

Channel	M4MN	M4MM	M4ML
Channel 0	✓	✓	✓
Channel 1	✓	✓	✓
Channel 2	✓	✓	✓
Channel 3	✓	✓	-

Note1: ✓: Available, -: N/A

Note2: External pins vary depending on the product. Please refer to section "2.Pin Assignment".

Downloaded from Arrow.com.

5.13. Serial Peripheral Interface (TSPI)

The TSPI supports two communication methods and enables serial communication to perform between other devices at high speed. The SPI bus type, which uses a CS (Chip Select) signal at communications, and SIO bus type, which does not use a CS signal at communications can be selected.

The data length can be changed from 7 bits (with a parity bit) to 32 bits (without a parity bit) in the unit of one bit. There is an 8-stage 16-bit FIFO for reception and transmission, each. The TSPI supports the master and slave communications.

It can support frame mode (frame length (8 to 32 bit)) or sector mode (8 to 128 bit of frame length is configured in 2 to 4 sectors).

Table 5.12 Built-in TSPI

Channel	M4MN	M4MM	M4ML
Channel 0	✓	✓	✓
Channel 1	✓	✓	✓

Note1: ✓: Available, -: N/A

Note2: External pins vary depending on the product. Please refer to section "2.Pin Assignment".

5.14. I^{2}C Interface

The following table shows the List of Built-in I^{2}C Interface.

I2C and EI2C assigned to the same channel and the same pin cannot be used at the same time.

Table 5.13 Built-in I2C / EI2C

Channel	M4MN	M4MM	M4ML
Channel 0	✓	✓	✓
Channel 1	✓	✓	✓

Note1: ✓: Available, -: N/A

Note2: External pins vary depending on the product. Please refer to section "2.Pin Assignment".

5.14.1. I^{2}C Interface (I2C)

I^{2}C is two-wire bi-directional serial communications between Master and Slave device. The mode in which two or more masters can exist on the same bus called a multi-master is supported. It supports Standard mode (Max 100kHz), Fast mode (Max 400kHz). It supports 7-bit slave addressing.

5.14.2. I^{2}C Interface Version A (EI2C)

EI^{2}C is two-wire bi-directional serial communications between Master and Slave device. The mode in which two or more masters can exist on the same bus called a multi-master is supported. It supports STD mode (Max 100kHz), Fast mode (Max 400kHz), Fast mode plus (Max 1MHz), and 7-bit addressing and more 10-bit addressing.

Downloaded from Arrow.com.

5.15. CAN controller (CAN)

The CAN is a system that can mutually communicate without a host computer. It conforms to CAN version 2.0 B active and supports the standard and extended format. It has 32 mailbox and maximum transfer rate is 1Mbps.

Table 5.14 Built-in CAN

Unit	M4MN	M4MM	M4ML
Unit A	✓	✓	✓

Note1: ✓: Available, -: N/A

5.16. 12-bit Analog to Digital Converter (ADC)

The ADC is a 12-bit successive-approximation analog-to-digital converter. The combination of a conversion result register and analog input can be programmed in each startup trigger of AD conversion. A startup trigger for analog to digital conversion can be selected from software or peripheral functions (A-PMD trigger outputs, timer/event counter outputs, port inputs). A motor is easily controllable by cooperating especially with A-PMD.

The monitor function of conversion result is also available and it can generate an interrupt when the compare conditions are matched.

This ADC incorporates a selector to connect VREFH/VREFL with reference power supply. Controlling by software can support self-diagnosis function.

Table 5.15 Built-in ADC channel list

ADC	M4MN	M4MM	M4ML
Unit A Analog Inputs Pin count	11	8	8
Unit B Analog Inputs Pin count	5	5	3
Unit C Analog Inputs Pin count	6	4	3

Note: External pins vary depending on the product. Please refer to section "2.Pin Assignment".

5.17. Operational Amplifier (OPAMP)

This MCU incorporates an OPAMP to amplify weak analog signals inputting to the ADC. The input gain is selectable.

Table 5.16 Built-in OPAMP

Unit	M4MN	M4MM	M4ML
Unit A	✓	✓	✓
Unit B	✓	✓	✓
Unit C	✓	✓	✓

Note: ✓: Available, -: N/A

Downloaded from Arrow.com.

5.18. Advanced Programmable Motor Control Circuit (A-PMD)

The A-PMD enables users to control brushless DC motors easily. It incorporates the pulse modulation circuit and dead-time circuit, and easily generates signals for motor control that makes 3-phase complementary PWM output and ADC cooperate.

It also provides the over-voltage detection input and abnormal detection input to support safety measures.

Furthermore, 3-phase interleaved PFC control for power-factor improvement can be provided.

Table 5.17 Built-in A-PMD

Channel	M4MN	M4MM	M4ML
Channel 0	✓	✓(Note3)	✓(Note3)
Channel 1	✓	✓(Note3)	✓(Note3)
Channel 2	✓	✓(Note3)	✓(Note3)

Note1: ✓: Available, -: N/A

Note2: External pins vary depending on the product. Please refer to section "2.Pin Assignment".

Note3: There is no OVVx pin.

5.19. Advanced Encoder Input Circuit (32-bit) (A-ENC32)

The A-ENC32 supports an incremental encoder to acquire the motor position easily. The noise canceller is installed in the input pins, so that the signals from an incremental encoder or Hall sensor can be input directly.

The A-ENC32 provides six operation modes: encoder mode, sensor modes (3 kinds), timer mode, and phase counter mode.

Table 5.18 Built-in A-ENC

Channel	M4MN	M4MM	M4ML
Channel 0	✓	✓	-
Channel 1	✓	✓(Note3)	-
Channel 2	✓	✓	✓

Note1: ✓: Available, -: N/A

Note2: External pins vary depending on the product. Please refer to section "2.Pin Assignment".

Note3: There is no ENC1Z pin.

Downloaded from Arrow.com.

5.20. Advanced Vector Engine Plus (A-VE+)

The advanced vector engine plus executes vector control by hardware. In this vector operation, the ADC and A-PMD operate in a coordinated fashion without software involvement.

Also, it provides 1-shunt current detection area enlargement process, dead time compensation control, and non-interfere control.

Table 5.19 Built-in A-VE+

Channel	M4MN	M4MM	M4ML
Channel 0	✓	✓	✓

Note: ✓: Available, -: N/A

5.21. 32-bit Timer Event Counter (T32A)

The T32A is a timer event counter that can operate as a 32-bit timer or two 16-bit timers. 16-bit Timer or 32-bit Timer can be selected. In 16-bit Timer, the T32A is comprised of Timer A and Timer B incorporating a 16-bit counter. In 32-bit Timer, the T32A operates as Timer C incorporating a 32-bit counter.

The T32A have an interval timer, event counter, input capture, 2-phase counter input, PPG output, Synchronous Start, and Trigger start/stop functions.

Table 5.20 Built-in T32A

Channel	M4MN	M4MM	M4ML
Channel 0	✓	✓	✓
Channel 1	✓	✓	✓
Channel 2	✓	✓	✓
Channel 3	✓	✓	✓
Channel 4	✓	✓	✓
Channel 5	✓	✓	✓

Note1: ✓: Available, -: N/A

Note2: External pins vary depending on the product. Please refer to section "2.Pin Assignment".

Downloaded from Arrow.com.

5.22. Clock Selective Watchdog Timer (SIWDT)

The SIWDT is a peripheral function that detects an overflow of the binary counter and generates an interrupt request or resets the MCU. This state occurs when a binary counter cannot be cleared within the preset detection time.

The count clock can be selected from three clocks: system clock (fsys/4), internal oscillator1 (f_{IHOSC1}), or internal oscillator2 (f_{IHOSC2}).

It also provides the count-clear window function that can clear the count only for the specified period.

Moreover, change of a register can be forbidden by setting to protected mode.(the count-clear function is possible)

Table 5.21 Built-in SIWDT

Channel	M4MN	M4MM	M4ML
Channel 0	✓	✓	✓

Note: ✓: Available, -: N/A

5.23. CRC Calculation Circuit (CRC)

The CRC Calculation Circuit has the hardware calculation circuit for CRC32 and CRC16.

It can be used for detecting a memory and communication data error.

Table 5.22 Built-in CRC

	M4MN	M4MM	M4ML
CRC	✓	✓	✓

Note: ✓: Available, -: N/A

5.24. RAM Parity (RAMP)

The RAM parity function generates and (8-bit unit) stores even parity data when writing to RAM, and performs a parity judging when reading from RAM.

An interrupt is generated when it becomes an error by judgment. The Status and Address which the error generated are known.

Table 5.23 Built-in RAMP

Channel	M4MN	M4MM	M4ML
Channel 0	✓	✓	✓
Channel 1	✓	✓	✓

Note: ✓: Available, -: N/A

Downloaded from Arrow.com.

5.25. Measures for Security Risk

5.25.1. Outline

TMPM4M Group(1) contains two measures for security risk to prevent unauthorized access. Table 5.24, Table 5.25 and Figure 5.1 show the assumed access paths and protection targets for each operation mode.

For more information, refer to the reference manual “Flash Memory”.

(1) Security Function
The security function prohibits communication with debugging tools. It also prohibits flash writers from reading and writing to flash memory.

Table 5.24 Access paths and protection targets (1)

Operation mode	Access path	Protected object
Single chip mode Single Boot mode	JTAG/SW	CPU FLASH/ROM/RAM
Flash writer mode	Flash writer	FLASH

(2) Password in RAM Transfer Command
Single boot mode is operated by sending a command via UART communication.
The RAM transfer command is authenticated by the password.

Table 5.25 Access paths and protection targets (2)

Operation mode	Access path	Protected object
Single Boot mode	UART	CPU FLASH/ROM/RAM

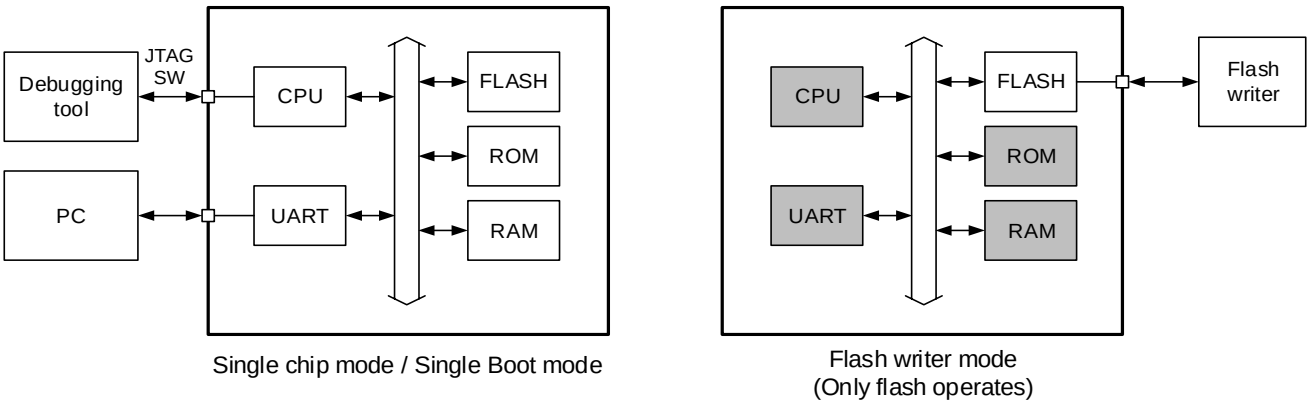

Figure 5.1 Measures for security risk

Note) The security function does not prohibit Non Break Debug Interface (NBDIF) communication. Prohibit it with ***[NBDCR0]***<NBDEN>.
(It’s applicable to the products with NBDIF.)

5.25.2. Disclaimer

Refer to "RESTRICTIONS ON PRODUCT USE" at the end of this manual.

Downloaded from Arrow.com.

6. Equivalent Circuit

Basically, the gate symbols written are the same as those used for the standard CMOS logic IC [74HCxx] series.

The input protection resistance ranges from several tens of Ω to several hundred Ω. Feedback resistor and Damping resistor are shown with a typical value.

Note: The resistance without the statement of the numerical value in the figure shows input protection resistance.

6.1. Port

PJ0 to PJ5, PK0 to PK4, PL0 to PL7, PM0 to PM2	Programmable pull-up and pull-down resistor supported, programable open-drain output supported, schmitt trigger input supported, and analog input supported 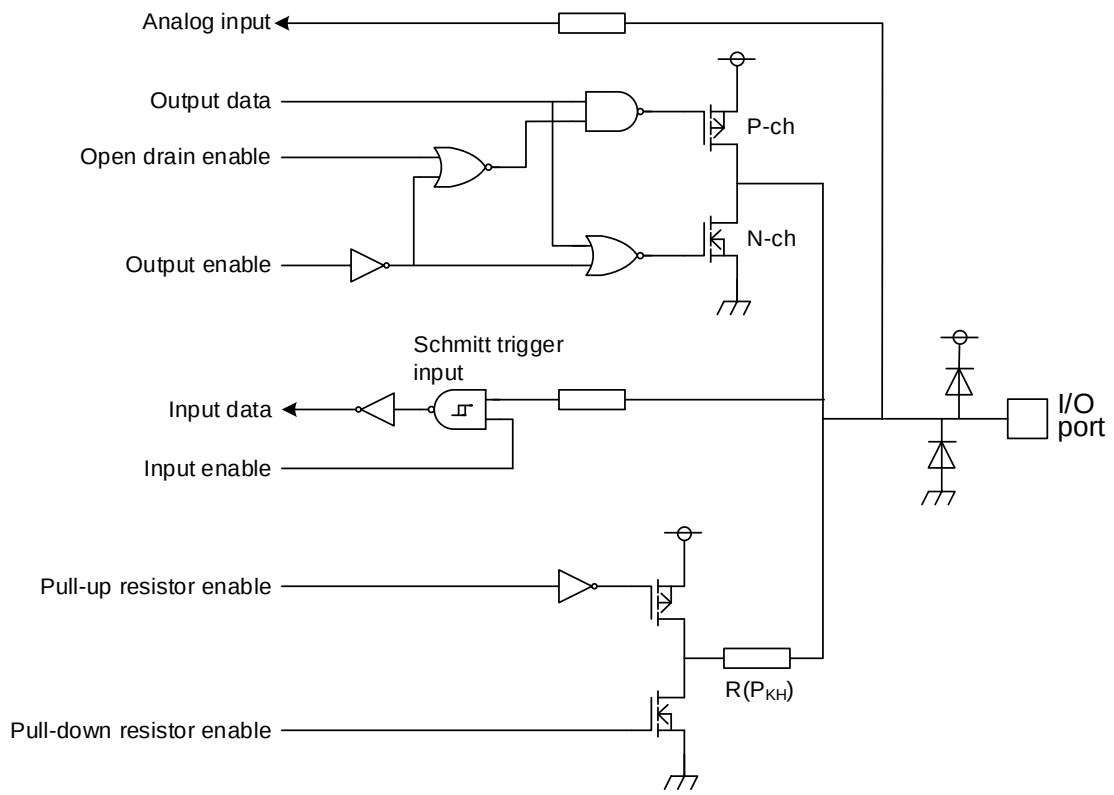

Downloaded from Arrow.com.

PA0, PB0 to PB7, PC4, PC5, PC7, PE0, PE2, PE7, PF0, PF3, PF6, PF7, PG0, PG1, PG4 to PG6, PN0, PU7, PV0 to PV1	Programmable pull-up and pull-down resistor supported, programable open-drain output supported, and schmitt trigger input supported 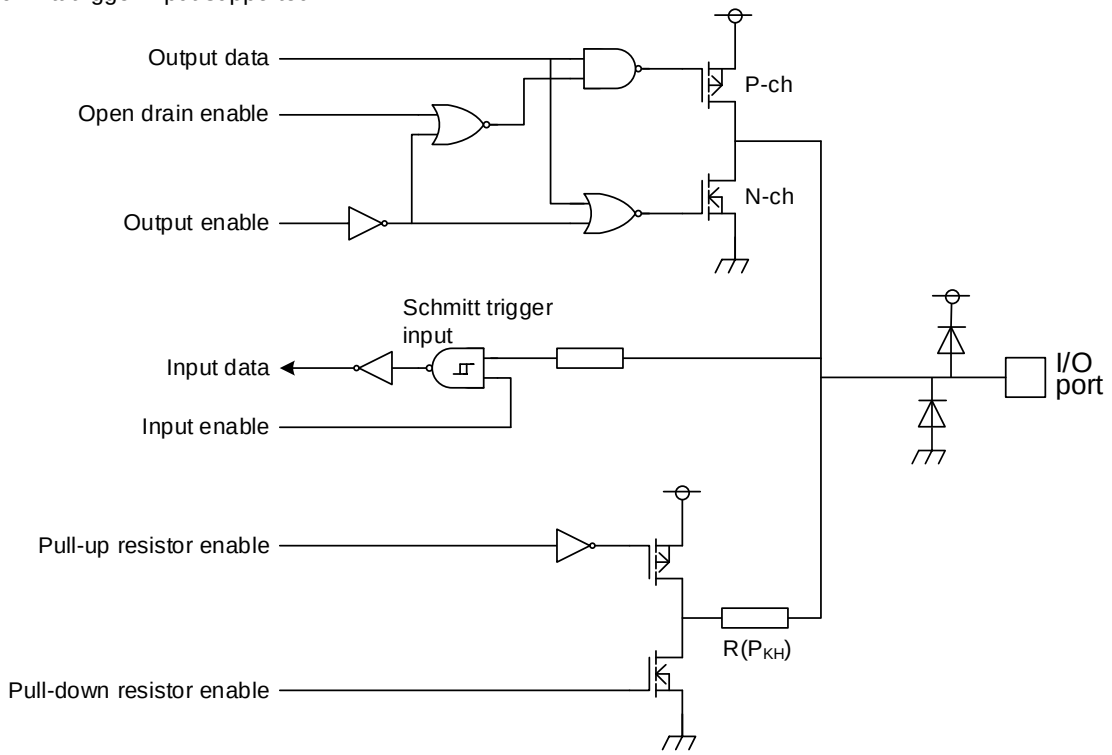
PA1 to PA4, PC2, PC3, PC6, PD0 to PD2, PD5, PE1, PE3 to PE6, PF1, PF2, PF4, PF5, PG3, PN1, PN2, PU2 to PU6	Programmable pull-up and pull-down resistor supported, programable open-drain output supported, schmitt trigger input supported, and external interrupt input supported 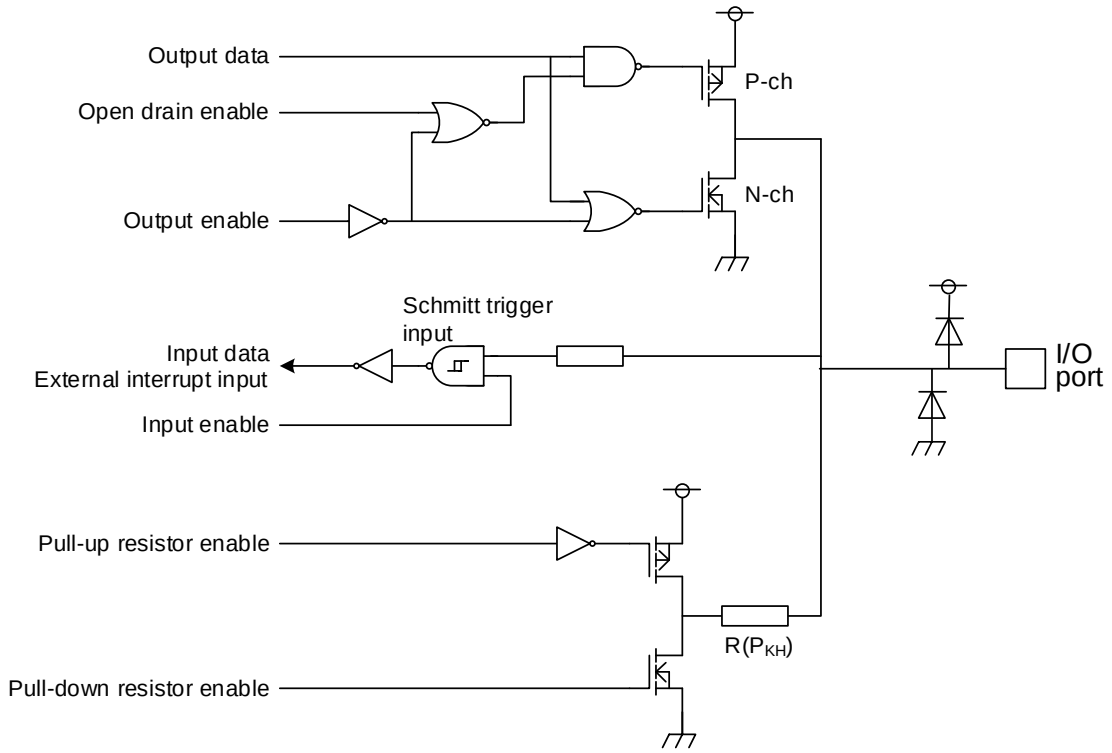

Downloaded from Arrow.com.

PC0, PC1, PD3, PD4, PU0, PU1	5V tolerant input supported, programmable pull-up and pull-down resistor supported, programable open-drain output supported, schmitt trigger input supported, and external interrupt input supported 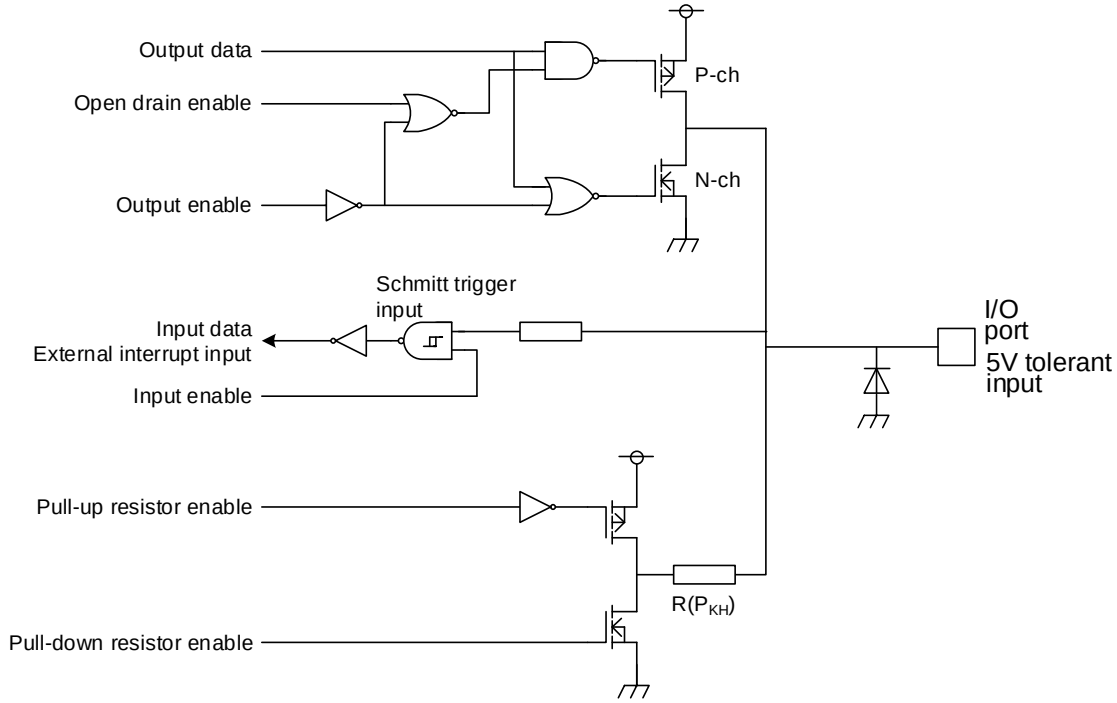 Note: PC1, PD4, PU0, and PU1
PH0, PH1	Programmable pull-down resistor supported, schmitt trigger input supported, and oscillation circuit supported 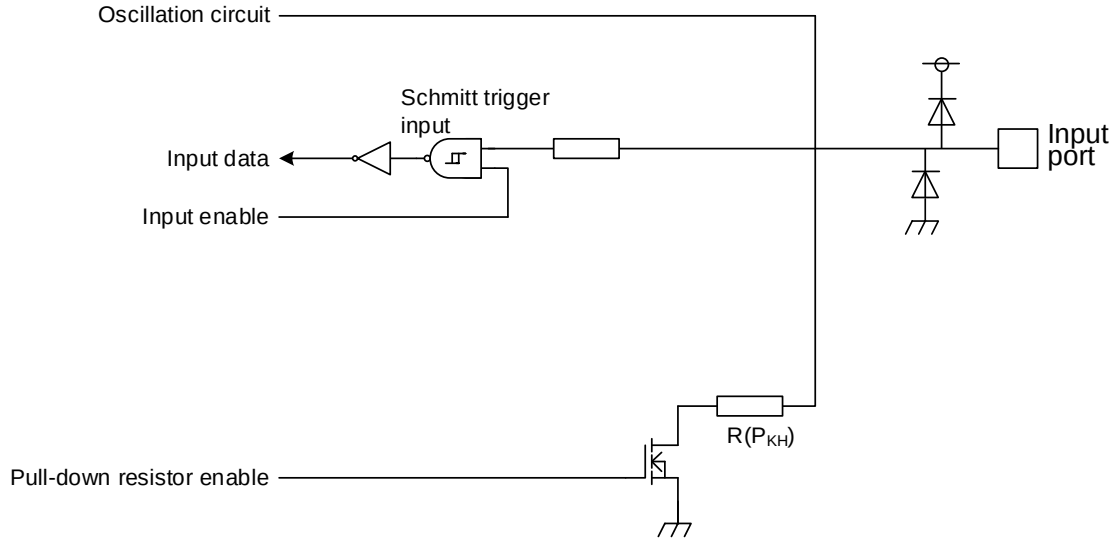

Downloaded from Arrow.com.

PG2/BOOT_N	Programmable pull-up and pull-down resistor supported, programable open-drain output supported, and schmitt trigger input 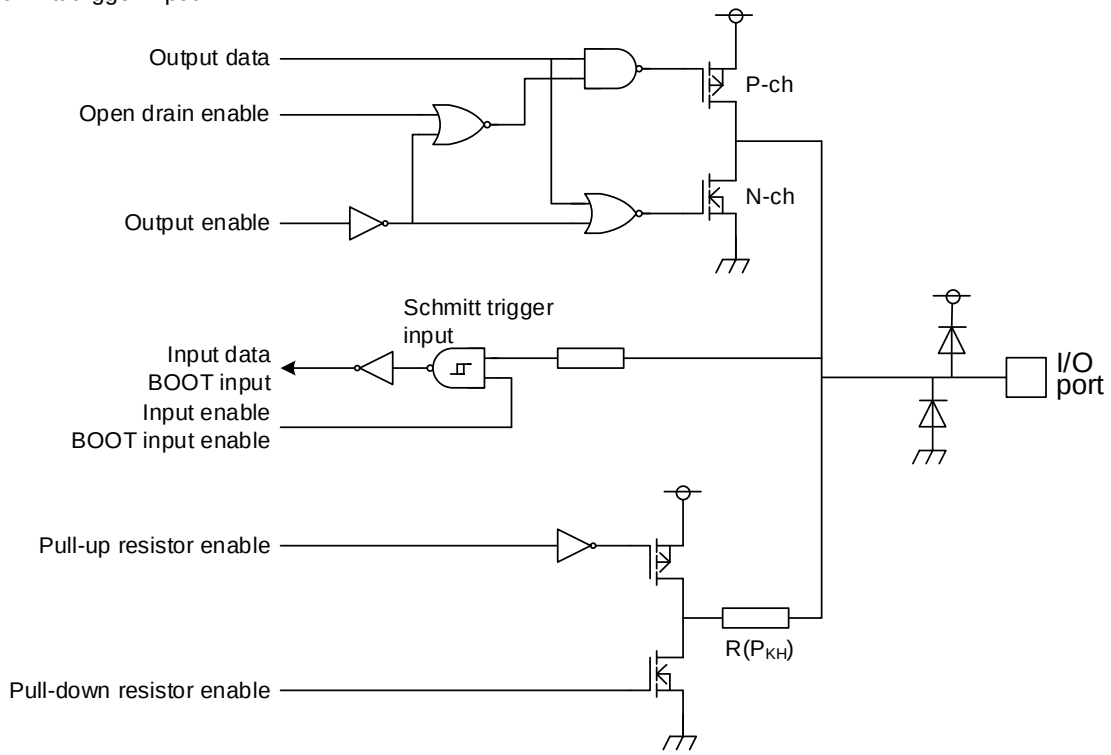

6.2. Analog Reference pin

VREFH **VREFL**	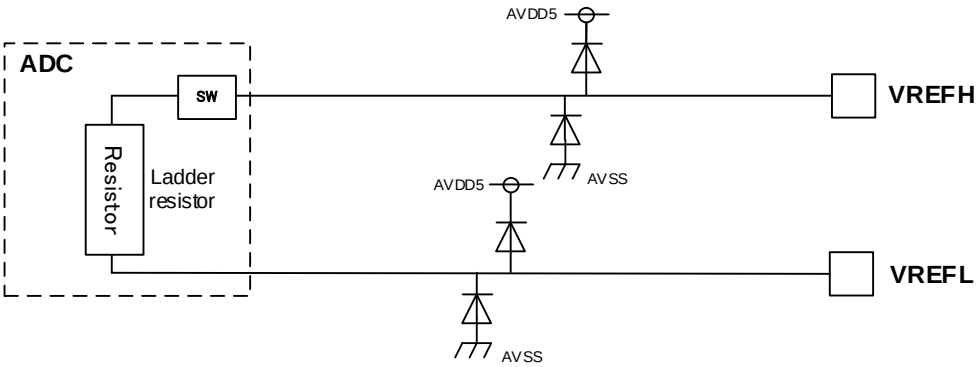

Note: SW: ON/OFF Switch Circuit

Downloaded from Arrow.com.

6.3. Control Pin

MODE	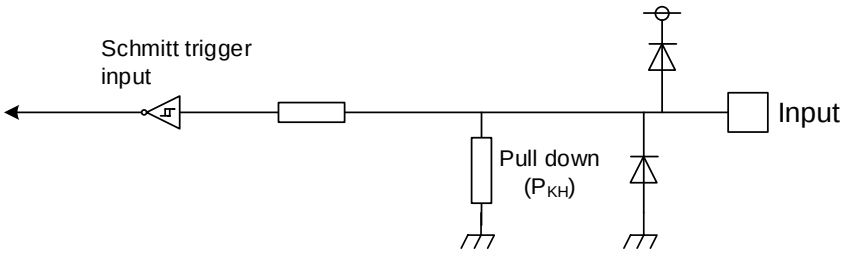 MODE pin must be connected to GND.
RESET_N	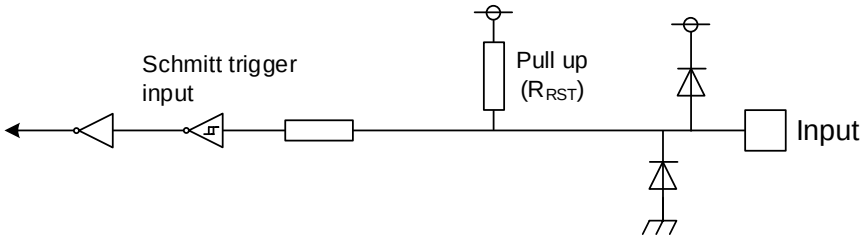

6.4. Clock control

X1, X2	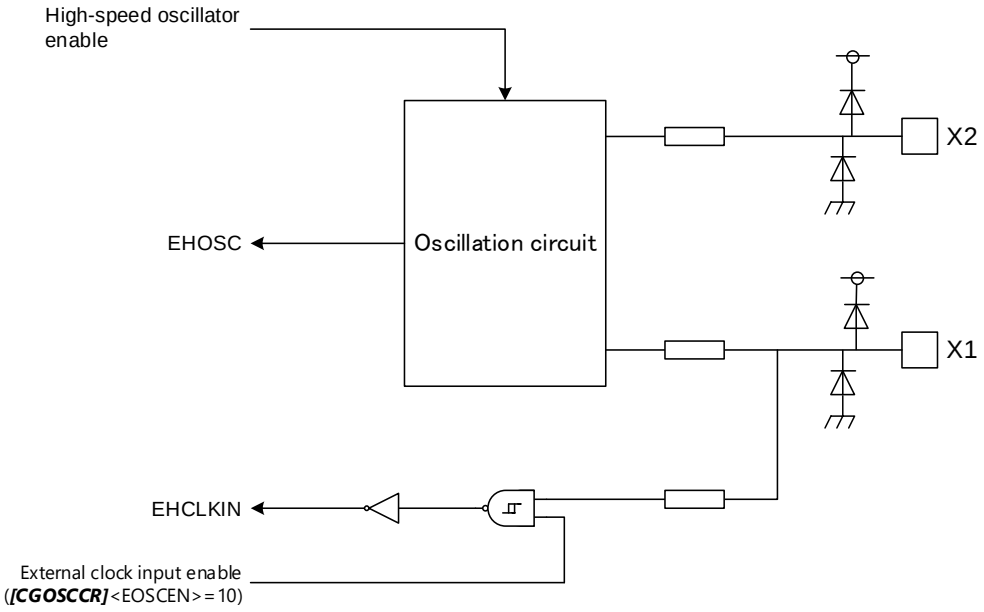

Downloaded from Arrow.com.

7. Electrical Characteristics

7.1. Absolute Maximum Ratings

Table 7.1 Absolute maximum ratings

Parameter		Symbol	Rating	Unit
Power supply voltage		DVDD5A DVDD5B	-0.3 to 6.0	V
		AVDD5	-0.3 to DVDD5 (Note2)	
Capacitor pin voltage for voltage maintenance		REGOUT1	-0.3 to 1.4	V
		REGOUT2	-0.3 to 3.9	
Input voltage	PA0 to PA4, PB0 to PB7, PC2 to PC7, PD0 to PD2, PD5, PE0 to PE7, PF0 to PF7, PG0, PG1, PG3 to PG6, PH0, PH1, PN0 to PN2, PU2 to PU7, PV0 to PV1, MODE, RESET_N, BOOT_N	V_{IN1} V_{IN2}	-0.3 to DVDD5+0.3(≤6.0V) (Note2)	V
	PJ0 to PJ5, PK0 to PK4, PL0 to PL7, PM0 to PM2	V_{IN3}	-0.3 to AVDD5+0.3(≤6.0V) (Note2)	
	PC0, PC1, PD3, PD4, PU0, PU1	V_{IN4}	-0.3 to 6.0	
Low level output current	Per pin PA0 to PA4, PB0 to PB7, PC2 to PC7, PD0 to PD2, PD5, PE0 to PE7, PF0 to PF7, PG0 to PG6, PH0, PH1, PJ0 to PJ5, PK0 to PK4, PL0 to PL7, PM0 to PM2, PN0 to PN2, PU2 to PU7, PV0 to PV1	I_{OL}	5	mA
	Per pin PC0, PC1, PD3, PD4, PU0, PU1	I_{OL4}	25	
	Total of all pins	ΣI_{OL}	50	
High level output current	Per pin PA0 to PA4, PB0 to PB7, PC0 to PC7, PD0 to PD5, PE0 to PE7, PF0 to PF7, PG0 to PG6, PH0, PH1, PJ0 to PJ5, PK0 to PK4, PL0 to PL7, PM0 to PM2, PN0 to PN2, PU0 to PU7, PV0 to PV1	I_{OH}	-5	
	Total of all pins	ΣI_{OH}	-50	
Power consumption		PD	(Note3)	mW
Soldering temperature		T_{SOLDER}	260	°C
Storage temperature		T_{STG}	-55 to 125	°C
Operating temperature		T_{OPR}	-40 to 105(Note3)	°C
		Tj	-40 to 135	

Note1: Absolute maximum ratings are limiting values of operating and environmental conditions which should not be exceeded under the worst possible conditions. The equipment manufacturer should design so that no Absolute maximum rating value is exceeded with respect to current, voltage, power consumption, temperature, etc. Exposure to conditions beyond those listed above may cause permanent damage to the device or affect device reliability, which could increase potential risks of personal injury due to IC blow up and/or burning.

Note2: DVDD5 is a generic name for DVDD5A, DVDD5B. DVSS is a generic name for DVSSA, DVSSB, DVSSC. Apply the same voltage to DVDD5 and AVDD5.
And refer to following description for turning-on and turning-off a power.

Downloaded from Arrow.com.

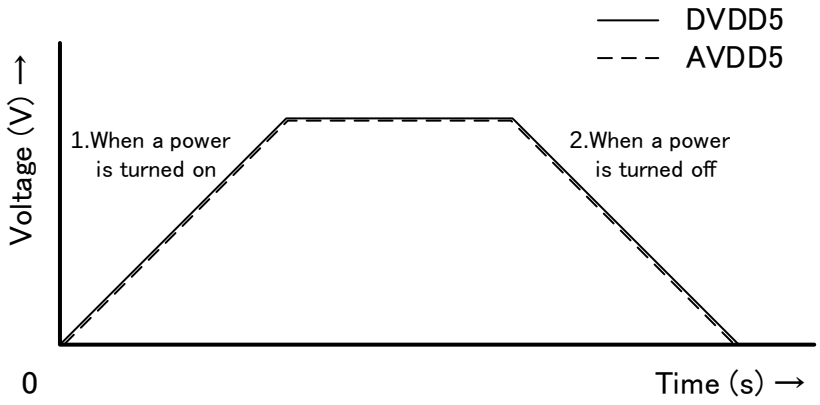

Figure 7.1 Notice When a Power is Turned On and Off

1. When a power is turned on
   Note the following:
   A) Even if DVDD5 and AVDD5 are supplied a voltage from a same power supply, the voltage between DVDD5 and AVDD5 may have a different by the capacity of the capacitors which are connected with DVDD5 to DVSS and AVSS5 to AVSS, and by the stray capacitances and inductance of PCB patterns.

2. When a power is turned off
   Note the following:
   A) Because capacitors and PCB patterns still have a residual electric charge, the voltage between DVDD5 and AVDD5 may have a different.

   B) A power is re-turned on in above situation.

Note3: The power consumption and the maximum temperature of the operating temperature (T_{OPR}) should be used within the range not exceeding the junction temperature (Tj). The calculation formula for operating temperature (T_{OPR} (Ta)) is shown below.

$T_{OPR}(Max) = Tj(Max) - PD(Max) \times \theta ja$

PD: Power consumption (mW) → Maximum allowable power (PD(Max)) (mW)

θja: Thermal resistance of the package (°C/W)

Please refer to Table 7.2.

The calculation formula for maximum allowable power (PD(Max)) is shown below.

$PD(Max) = V_{DD} \times I_{DD}(Max) + \Sigma(I_{OL} \times V_{OL}) + \Sigma((V_{DD} - V_{OH}) \times |I_{OH}|)$

I_{OL}: "Low" level output current

I_{OH}: "High" level output current

V_{OL}: "Low" level output voltage

V_{OH}: "High" level output voltage

$I_{DD}(Max)$: Consumption current of the MCU excluding I/O.

Please refer to "7.3.DC Electrical Characteristics (2/2)".

Downloaded from Arrow.com.

Table 7.2 Thermal resistance of IC package and maximum allowable power table

Package	Substrate	Thermal resistance θja (°C/W)	Maximum allowable power (PD(Max)) (mW)	
			T_{OPR}=+85°C	T_{OPR}=+105°C
P-LQFP100-1414-0.50-002	1 layer	55	909	545
	4 layer	48	1042	625
P-LQFP80-1212-0.50-005	1 layer	58	862	517
	4 layer	49	1020	612
P-LQFP64-1010-0.50-003	1 layer	61	820	492
	4 layer	50	1000	600
P-QFP100-1420-0.65-003	1 layer	57	877	526
	4 layer	50	1000	600
P-LQFP64-1414-0.8-002	1 layer	55	909	545
	4 layer	48	1042	625

Downloaded from Arrow.com.

7.2. DC Electrical Characteristics (1/2)

4.5V ≤ DVDD5=AVDD5 ≤ 5.5V
DVSS = AVSS=0V
Ta=-40 to 105 °C

Parameter		Symbol	Conditions	Min	Typ.	Max	Unit
Power supply voltage	DVDD5A, DVDD5B, AVDD5	VDD	fosc = 6 to 12MHz fsys = 1 to 160MHz fsysm=1 to 80MHz	4.5	-	5.5	V
Low level Input voltage	PA0 to PA4, PB0 to PB7, PC2 to PC7, PD0 to PD2, PD5, PE0 to PE7, PF0 toPF7, PG0, PG1, PG3 to PG6, PH0, PH1, PN0 to PN2, PU2 to PU7, PV0 to PV1, MODE, RESET_N, BOOT_N	V_{IL1} V_{IL2}		-0.3	-	DVDD5×0.25	V
	PJ0 to PJ5, PK0 to PK4, PL0 to PL7, PM0 to PM2	V_{IL3}				AVDD5×0.25	
	PC0, PC1, PD3, PD4, PU0, PU1	V_{IL4}				DVDD5×0.3	
High level Input voltage	PA0 to PA4, PB0 to PB7, PC2 to PC7, PD0 to PD2, PD5, PE0 to PE7, PF0 to PF7, PG0, PG1, PG3 to PG6, PH0, PH1, PN0 to PN2, PU2 to PU7, PV0 to PV1, MODE, RESET_N, BOOT_N	V_{IH1} V_{IH2}		DVDD5×0.75	-	DVDD5+0.3	V
	PJ0 to PJ5, PK0 to PK4, PL0 to PL7, PM0 to PM2	V_{IH3}		AVDD5×0.75		AVDD5+0.3	
	PC0, PC1, PD3, PD4, PU0, PU1	V_{IH4}		DVDD5×0.7		DVDD5+0.3	
Low level output voltage	PA0 to PA4, PB0 to PB7, PC2 to PC7, PD0 to PD2, PD5, PE0 to PE7, PF0 to PF7, PG0 to PG6, PN0 to PN2, PU2 to PU7, PV0 to PV1	V_{OL1} V_{OL2}	DVDD5=4.5V I_{OL}=1.6mA	-	-	0.4	V
	PJ0 to PJ5, PK0 to PK4, PL0 to PL7, PM0 to PM2	V_{OL3}	AVDD5=4.5V I_{OL}=1.6mA	-	-	0.4	
	PC0, PC1, PD3, PD4, PU0, PU1	V_{OL4}	DVDD5=4.5V I_{OL}=8mA	-	-	1.0	
High level output voltage	PA0 to PA4, PB0 to PB7, PC0 to PC7, PD0 to PD5, PE0 to PE7, PF0 to PF7, PG0 to PG6, PN0 to PN2, PU0 to PU7, PV0 to PV1	V_{OH1} V_{OH2}	DVDD5=4.5V I_{OH} = -1.6mA	DVDD5-0.4	-	-	V
	PJ0 to PJ5, PK0 to PK4, PL0 to PL7, PM0 to PM2	V_{OH3}	AVDD5=4.5V I_{OH} = -1.6mA	AVDD5-0.4	-	-	

Note1: DVDD5 is a generic name for DVDD5A and DVDD5B. DVSS is a generic name for DVSSA, DVSSB and DVSSC.

Note2: Typ. value is in Ta = 25 °C, DVDD5 = AVDD5 = 5.0V, unless otherwise noted.

Note3: Apply same voltage line to DVDD5 and AVDD5.

Downloaded from Arrow.com.

4.5V ≤ DVDD5=AVDD5 ≤ 5.5V
DVSS=AVSS=0V
Ta= -40 to 105°C

Parameter		Symbol	Conditions	Min	Typ.	Max	Unit
Input leak current		I_{LI}	0V ≤ VIN ≤ DVDD5 0V ≤ VIN ≤ AVDD5	-5	±0.05	5	μA
Output leak current		I_{LO}	0.2 ≤ VIN ≤DVDD5-0.2 0.2 ≤ VIN ≤AVDD5-0.2	-10	±0.05	10	
Schmitt trigger Input width		V_{TH}	DVDD5=AVDD5=5V	-	1.0	-	V
Reset pull-up resistor		R_{RST}		25	50	100	kΩ
Programmable pull-up/pull-down resistor		P_{KH}	Pull-up	25	50	100	
			Pull-down	25	50	100	
Pin capacity (except power supply pin)		C_{IO}	fc =1MHz	-	-	10	pF
Low level output current	Per pin (except the following	I_{OL}	DVDD5=AVDD5=5V	-	-	2 (Note4)	mA
	Per pin PC0, PC1, PD3, PD4, PU0, PU1	I_{OL4}	DVDD5=5V	-		12 (Note4)	
	Total of PC0 to PC7, PB0 to PB7, PD0 to PD5, PG0 to PG6, PE0 to PE7	ΣI_{OL1}	DVDD5=5V	-	-	35 (Note5)	
	Total of PF0 to PF7, PU0 to PU7, PN0 to PN2, PV0 to PV1, PA0 to PA4	ΣI_{OL2}	DVDD5=5V	-	-	35 (Note5)	
	Total of PJ0 to PJ5, PK0 to PK4, PL0 to PL7, PM0 to PM2	ΣI_{OL3}	AVDD5=5V	-	-	35 (Note5)	
High level output current	Per pin	I_{OH}	DVDD5=AVDD5=5V	-2 (Note4)	-	-	mA
	Total of PC0 to PC7, PB0 to PB7, PD0 to PD5, PG0 to PG6, PE0 to PE7	ΣI_{OH1}	DVDD5=5V	-35 (Note5)	-	-	
	Total of PF0 to PF7, PU0 to PU7, PN0 to PN2, PV0 to PV1, PA0 to PA4	ΣI_{OH2}	DVDD5=5V	-35 (Note5)	-	-	
	Total of PJ0 to PJ5, PK0 to PK4, PL0 to PL7, PM0 to PM2	ΣI_{OH3}	AVDD5=5V	-35 (Note5)	-	-	

Note1: DVDD5 is a generic name for DVDD5A and DVDD5B. DVSS is a generic name for DVSSA, DVSSB, and DVSSC.

Note2: Typ. value is in Ta = 25 °C, DVDD5 = AVDD5 = 5.0V, unless otherwise noted.

Note3: Apply same voltage line to DVDD5 and AVDD5.

Note4: The sum of the terminal currents in each group should not exceed the total current of each group.

Note5: The sum of each group current should not exceed the absolute maximum rating.

Downloaded from Arrow.com.

2.7V ≤DVDD5=AVDD5< 4.5V
DVSS=AVSS=0V
Ta=-40 to 105 °C

Parameter		Symbol	Conditions	Min	Typ.	Max	Unit
Power supply voltage	DVDD5A, DVDD5B, AVDD5	VDD	fosc = 6 to 12MHz fsys = 1 to 160MHz fsysm=1 to 80MHz	2.7	-	4.5	V
Low level Input voltage	PA0 to PA4, PB0 to PB7, PC2 to PC7, PD0 to PD2, PD5, PE0 to PE7, PF0 toPF7, PG0, PG1, PG3 to PG6, PH0, PH1, PN0 to PN2, PU2 to PU7, PV0 to PV1, MODE, RESET_N, BOOT_N	V_{IL1} V_{IL2}		-0.3	-	DVDD5×0.25	V
	PJ0 to PJ5, PK0 to PK4, PL0 to PL7, PM0 to PM2	V_{IL3}				AVDD5×0.25	
	PC0, PC1, PD3, PD4, PU0, PU1	V_{IL4}				DVDD5×0.3	
High level Input voltage	PA0 to PA4, PB0 to PB7, PC2 to PC7, PD0 to PD2, PD5, PE0 to PE7, PF0 to PF7, PG0, PG1, PG3 to PG6, PH0, PH1, PN0 to PN2, PU2 to PU7, PV0 to PV1, MODE, RESET_N, BOOT_N	V_{IH1} V_{IH2}		DVDD5×0.75	-	DVDD5+0.3	V
	PJ0 to PJ5, PK0 to PK4, PL0 to PL7, PM0 to PM2	V_{IH3}		AVDD5×0.75		AVDD5+0.3	
	PC0, PC1, PD3, PD4, PU0, PU1	V_{IH4}		DVDD5×0.7		DVDD5+0.3	
Low level output voltage	PA0 to PA4, PB0 to PB7, PC2 to PC7, PD0 to PD2, PD5, PE0 to PE7, PF0 to PF7, PG0 to PG6, PN0 to PN2, PU2 to PU7, PV0 to PV1	V_{OL1} V_{OL2}	DVDD5=2.7V I_{OL}=0.8mA	-	-	0.4	V
	P PJ0 to PJ5, PK0 to PK4, PL0 to PL7, PM0 to PM2	V_{OL3}	AVDD5=2.7V I_{OL}=0.8mA	-	-	0.4	
	PC0, PC1, PD3, PD4, PU0, PU1	V_{OL4}	DVDD5=2.7V I_{OL}=4mA	-	-	1.0	
High level output voltage	PA0 to PA4, PB0 to PB7, PC0 to PC7, PD0 to PD5, PE0 to PE7, PF0 to PF7, PG0 to PG6, PN0 to PN2, PU0 to PU7, PV0 to PV1	V_{OH1} V_{OH2}	DVDD5=2.7V I_{OH}= -0.8mA	DVDD5-0.4	-	-	V
	PJ0 to PJ5, PK0 to PK4, PL0 to PL7, PM0 to PM2	V_{OH3}	AVDD5=2.7V I_{OH}= -0.8mA	AVDD5-0.4	-	-	

Note1: DVDD5 is a generic name for DVDD5A and DVDD5B. DVSS is a generic name for DVSSA, DVSSB and DVSSC.

Note2: Typ. value is in Ta = 25 °C, DVDD5 = AVDD5 = 3.0V, unless otherwise noted.

Note3: Apply same voltage line to DVDD5 and AVDD5.

Downloaded from Arrow.com.

2.7V ≤DVDD5=AVDD5< 4.5V
DVSS=AVSS=0V
Ta= -40 to 105°C

Parameter		Symbol	Conditions	Min	Typ.	Max	Unit
Input leak current		I_{LI}	0V ≤ VIN ≤ DVDD5 0V ≤ VIN ≤ AVDD5	-5	±0.05	5	μA
Output leak current		I_{LO}	0.2 ≤ VIN ≤DVDD5-0.2 0.2 ≤ VIN ≤AVDD5-0.2	-10	±0.05	10	
Schmitt trigger Input width		V_{TH}	DVDD5=AVDD5=3V	-	0.5	-	V
Reset pull-up resistor		R_{RST}		25	100	200	kΩ
Programmable pull-up/pull-down resistor		P_{KH}	Pull-up	25	100	200	
			Pull-down	25	100	200	
Pin capacity (except power supply pin)		C_{IO}	fc =1MHz	-	-	10	pF
Low level output current	Per pin (except the following	I_{OL}	DVDD5=AVDD5=3V	-	-	1 (Note4)	mA
	Per pin PC0, PC1, PD3, PD4, PU0, PU1	I_{OL4}	DVDD5=3V	-	-	6 (Note4)	
	Total of PC0 to PC7, PB0 to PB7, PD0 to PD5, PG0 to PG6, PE0 to PE7	ΣI_{OL1}	DVDD5=3V	-	-	18 (Note5)	
	Total of PF0 to PF7, PU0 to PU7, PN0 to PN2, PV0 to PV1, PA0 to PA4	ΣI_{OL2}	DVDD5=3V	-	-	18 (Note5)	
	Total of PJ0 to PJ5, PK0 to PK4, PL0 to PL7, PM0 to PM2	ΣI_{OL3}	AVDD5=3V	-	-	17 (Note5)	
High level output current	Per pin	I_{OH}	DVDD5=AVDD5=3V	-1 (Note4)	-	-	mA
	Total of PC0 to PC7, PB0 to PB7, PD0 to PD5, PG0 to PG6, PE0 to PE7	ΣI_{OH1}	DVDD5=3V	-18 (Note5)	-	-	
	Total of PF0 to PF7, PU0 to PU7, PN0 to PN2, PV0 to PV1, PA0 to PA4	ΣI_{OH2}	DVDD5=3V	-18 (Note5)	-	-	
	Total of PJ0 to PJ5, PK0 to PK4, PL0 to PL7, PM0 to PM2	ΣI_{OH3}	AVDD5=3V	-17 (Note5)	-	-	

Note1: DVDD5 is a generic name for DVDD5A and DVDD5B. DVSS is a generic name for DVSSA, DVSSB, and DVSSC.

Note2: Typ. value is in Ta = 25 °C, DVDD5 = AVDD5 = 3.0V, unless otherwise noted.

Note3: Apply same voltage line to DVDD5 and AVDD5.

Note4: The sum of the terminal currents in each group should not exceed the total current of each group.

Note5: The sum of each group current should not exceed the absolute maximum rating.

Downloaded from Arrow.com.

7.3. DC Electrical Characteristics (2/2)

Ta= -40 to 105°C

Parameter	Symbol	Conditions	Min	Typ.	Max	Unit
NORMAL	I_{DD}	Refer to Table 7.3 and Table 7.4 for detail.	-	40	76	mA
IDLE			-	4	33	
STOP1			-	0.6	30	mA

Note1: DVDD5 is a generic name for DVDD5A and DVDD5B. DVSS is a generic name for DVSSA, DVSSB, and DVSSC.

Note2: Typ. value is in Ta = 25 °C, DVDD5 = AVDD5 = 5.0V, unless otherwise noted.

Note3: Apply same voltage to DVDD5 and AVDD5.

Note4: Input pin is fixed level, Output pin is open.

Table 7.3 I_{DD} measurement condition (Pin setting, Oscillation Circuit)

		NORMAL	IDLE	STOP1
Pin setting	DVDD5 AVDD5	5.0V(Typ.), 5.5V(max)		
	X1, X2	Oscillator connected (10MHz)		
	Input pins	Fixed		
	Output pins	Open		
Operating condition (Oscillation Circuit)	System clock (fsys/fsysm)	160MHz/80MHz		Stop
	External High speed oscillator (EHOSC)	Oscillation		Stop
	Internal High speed oscillator (IHOSC1)	Stop		
	PLL	run (16 times)		Stop

Downloaded from Arrow.com.

Table 7.4 I_{DD} measurement condition (CPU, Peripheral)

Peripheral	unit number	NORMAL	IDLE	STOP1
CPU	1	Run (DhrystoneVer.2.1)	Stop	
DMAC	1	(Request from UARTch0, ch2: TX source: RAM)	Stop	
ADC	3	Run (1.0µs, Repeated conversion)	Stop	
OPAMP	3	All ch: Run	Stop	
T32A	6	All ch: Run	Stop	
A-PMD	3	All ch: Run	Stop	
A-ENC32	3	Run	Stop	
A-VE+	1	Run	Stop	
SIWDT	1	Run	Stop	
UART	4	2ch's: Transmission(5Mbps)	Stop	
I2C/EI2C	2	Stop		
TSPI	2	2ch's: Transmission(10MHz)	Stop	
CAN	1	Stop		
CRC	1	Stop		
RAMP	2	Run	Stop	
LVD	1	Stop		
OFD	1	Run	Stop	
Debug	1	Stop		
NBDIF	1	Stop		
Input/Output Port	-	Run	Stop	

fsys=160MHz
Ta= -40 to 105°C

Item	Symbol	Condition	Min	Typ.	Max	Unit
Power consumption (ADC, OPAMP run)	I_{AVDD}	AVDD5=5.0V, AVSS=0V	-	18	26	mA

Downloaded from Arrow.com.

7.4. 12-bit AD Converter Characteristics

DVDD5=AVDD5=4.5V to 5.5V
DVSS=AVSS=0V
Ta= -40 to 105°C

Parameter	Symbol	Conditions	Min	Typ.	Max	Unit
Analog reference voltage (+)	VREFH		4.5	-	AVDD5	V
Analog input voltage	V_{AIN}	VREFL=AVSS	VREFL	-	VREFH	V
Integral nonlinear error (INL)	-	4.5V≤ AVDD5=VREFH ≤5.5V AVSS=VREFL=0V AIN load resistor = 600 Ω AIN load capacity ≥ 0.1μF Conversion time = 0.96 μs at SCLK=40MHz	-4	-	4	LSB
Differential nonlinear error (DNL)			-2	-	2	
Zero-scale error			-4	-	5	
Full-scale error			-5	-	4	
Total errors			-7	-	5	
Stable time	t_{sta}	After set ***[ADxMOD0]***<DACON> to "1"	3	-	-	μs
Conversion time	t_{conv}	4.5V ≤ AVDD5 ≤ 5.5V	0.91	-	-	

Note1: DVDD5 is a generic name for DVDD5A and DVDD5B. DVSS is a generic name for DVSSA, DVSSB, and DVSSC.

Note2: 1LSB = (VREFH - VREFL) / 4096 [V]

Note3: The characteristic when single AD converter operates.

DVDD5=AVDD5=4.5V to 5.5V
DVSS=AVSS=0V
Ta= -40 to 105°C

Parameter	Conditions	Min	Typ.	Max	Unit
Reference power supply voltage	Unit A: ch21 select Unit B: ch11 select Unit C: ch11 select	0.99	-	1.21	V

Note: DVDD5 is a generic name for DVDD5A and DVDD5B.

Downloaded from Arrow.com.

7.5. Operational Amplifier (OPAMP) Characteristics

DVDD5=AVDD5= 4.5V to 5.5V
DVSS=AVSS= 0V, Ta= -40 to 105°C

Parameter	Symbol	Conditions	Min	Typ.	Max	Unit
Gain (factor) (Note2)	V_{GAIN}	-	2.0	-	15	×
Amp input voltage range (Common mode)	V_{AMPINP} V_{AMPINN}	-	AVSS	-	(AVDD5×0.97) /V_{GAIN}	V
Amp input voltage range (Differential)	V_{AMPINP} V_{AMPINN}	-	0	-	AVDD5 /(MinV_{GAIN})	
Amp output voltage	V_{VOLT}	-	AVDD5×0.03	-	AVDD5×0.97	
Differential step offset voltage	V_{OFF}	-	-5	-	+5	mV
Gain error range	-	-	-3	-	+3	%
Through rate	Vthr	-	6	10	-	V/µs
AMPEN→Output stable time	Tsta1	Upper limit: +1% Lower limit: -1%	-	-	2	µs

Note1: The characteristic when the amplifier unit operates only.

Note2: Gain can selected 2.5, 3, 3.5, 4, 4.5, 6, 7, 8, 10, and 12

Note3: DVDD5 is a generic name for DVDD5A and DVDD5B. DVSS is a generic name for DVSSA, DVSSB, and DVSSC.

Note4: Typ. value is in Ta = 25 °C, DVDD5 = AVDD5 = 5.0V, unless otherwise noted.

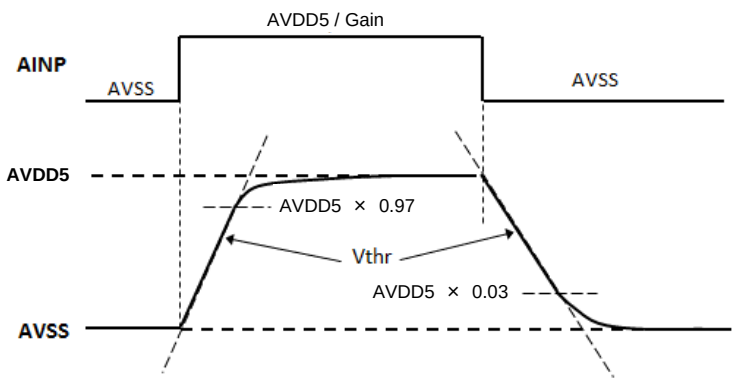

Figure 7.2 Through rate

Downloaded from Arrow.com.

7.6. Characteristics of Internal processing at RESET

DVSSA=DVSSB=DVSSC=AVSS=0V
Ta= -40 to 105°C

Parameter	Symbol	Conditions	Min	Typ.	Max	Unit
Internal Initialized time	t_{IINIT}	Power On	-	-	1.85	ms
Internal processing time for Reset	t_{IRST}	-	0.15	-	1.12	
Waiting time till CPU running (Note)	t_{CPUWT}	Power-on Reset operation by LVD in STOP1 mode Reset operation by RESET_N pin in STOP1 mode	12	-	15	µs
		Reset operation by LVD in NORMAL or IDLE mode Reset operation by RESET_N pin in NORMAL or IDLE mode Reset operation by WDT, OFD, LOCKUP, or SYSRESET in NORMAL or IDLE mode	132	-	137	
Power gradient	V_{PON}	Rising slope	0.3	-	100	mV/µs
	V_{POFF}	Falling slope	-	-	10	

Note: Except reset operation by WDT, OFD, LOCKUP, or SYSRESET, when reset factor repeats, t_{CPUWT} (Waiting time till CPU running) starts measuring elapse time after releasing this factor.

7.7. Characteristics of Power on Reset

DVSSA=DVSSB=DVSSC=AVSS=0V
Ta= -40 to 105°C

Parameter	Symbol	Conditions	Min	Typ.	Max	Unit
Detection voltage	V_{PREL}	Power increases	2.22	2.33	2.44	V
	V_{PDET}	Power decreases	2.17	2.28	2.39	
Detection pulse width 1	T_{PDET1}	-	200	-	-	µs

7.8. Characteristics of PORF

DVSSA=DVSSB=DVSSC=AVSS=0V
Ta= -40 to 105°C

Parameter	Symbol	Conditions	Min	Typ.	Max	Unit
Detection voltage	V_{PORFL}	Power increases	2.57	2.64	2.71	V
	V_{PORFD}	Power decreases	2.52	2.59	2.66	
Detection pulse width 2	T_{PDET2}	-	200	-	-	µs

Downloaded from Arrow.com.

7.9. Characteristics of Voltage Detection Circuit

DVDD5=AVDD5=2.7V to 5.5V
DVSS=AVSS=0V
Ta= -40 to 105°C

Parameter	Symbol	Conditions	Min	Typ.	Max	Unit
Detection voltage	V_{LVL0}	Power increases	2.63	2.7	2.77	V
		Power decreases	2.58	2.65	2.72	
	V_{LVL1}	Power increases	2.68	2.75	2.82	V
		Power decreases	2.63	2.7	2.77	
	V_{LVL2}	Power increases	2.78	2.85	2.92	V
		Power decreases	2.73	2.8	2.87	
	V_{LVL3}	Power increases	2.88	2.95	3.02	V
		Power decreases	2.83	2.9	2.97	
	V_{LVL4}	Power increases	3.96	4.05	4.14	V
		Power decreases	3.91	4.0	4.09	
	V_{LVL5}	Power increases	4.16	4.25	4.34	V
		Power decreases	4.11	4.2	4.29	
	V_{LVL6}	Power increases	4.36	4.45	4.54	V
		Power decreases	4.31	4.4	4.49	
	V_{LVL7}	Power increases	4.56	4.65	4.74	V
		Power decreases	4.51	4.6	4.69	
Detection response time	t_{VDDT1}	Power decreases	-	-	100	μs
Detection Release time	t_{VDDT2}	Power increases	-	-	100	
Setup time	t_{LVDEN}	-	-	-	100	
Detection Minimum pulse width	t_{LVDPW}	-	200	-	-	

Note: DVDD5 is a generic name for DVDD5A and DVDD5B. DVSS is a generic name for DVSSA, DVSSB, and DVSSC.

Downloaded from Arrow.com.

7.10. AC Electrical Characteristics

7.10.1. Serial Peripheral Interface (TSPI)

7.10.1.1. Conditions

The AC characteristics are as follows:

- DVDD5=AVDD5= 2.7 to 5.5 V
- Ta = -40 to 105°C
- Output level: High = 0.8 × DVDD5, Low = 0.2 × DVDD5
- Input level: High = 0.75 × DVDD5, Low = 0.25 × DVDD5
- Load capacity: CL = 30pF

Note: DVDD5 is a generic name for DVDD5A, and DVDD5B.

7.10.1.2. AC Electrical Characteristics

"T" indicates an operation clock cycle of the TSPI. This operation clock has the same cycle of the system clock (fsysm). This cycle depends on the clock gear setting.

The number of cycles can be 1 to 16. It is specified with TSPIxSCK. The value of "k1" is specified with ***[TSPIxFMTR0]***<CSSCKDL[3:0]>; the value of "k2" is specified with ***[TSPIxFMTR0]***<SCKCSDL[3:0]>. These values are 1 to 16.

Downloaded from Arrow.com.

(1) Master in SPI mode

4.5V ≤DVDD5=AVDD5≤ 5.5V

Parameter	Symbol	Equation		fsysm=80MHz k1=k2=1		Unit
		Min	Max	Min	Max	
TSPIxSCK output frequency	f_{CYC}	-	10	-	10	MHz
TSPIxSCK output cycle	t_{CYC}	100	-	100	-	ns
TSPIxSCK low level output pulse width	t_{WL}	(t_{CYC}/2) - 13	-	37	-	ns
TSPIxSCK high level output pulse width	t_{WH}	(t_{CYC}/2) - 13	-	37	-	ns
TSPIxCSn output ← TSPIxSCK rise/fall time	t_{CSU}	(t_{CYC} × k1) - 20	(t_{CYC} × k1) + 9	80	109	ns
TSPIxSCK rise/fall → TSPIxCSn hold time	t_{CHD}	(t_{CYC} × (k2 + 0.5))-20	-	130	-	ns
TSPIxRXD Input ← TSPIxSCK rise/fall time	t_{DSU}	35 - 2× T(Note)	-	10	-	ns
TSPIxSCK rise/fall → TSPIxRXD hold time	t_{DHD}	2×T - 10.5 (Note)	-	14.5	-	ns
TSPIxSCK rise/fall → TSPIxTXD delay time	t_{ODLY1}	-18	-	-18	-	ns
TSPIxSCK rise/fall → TSPIxTXD delay time	t_{ODLY2}	-	16	-	16	ns
TSPIxCSn fall → TSPIxTXD delay time	t_{ODLY3}	(t_{CYC} × (k1 - 0.5))-25	(t_{CYC} × (k1 - 0.5))+9	25	59	ns

Note: In this case ***[TSPIxCR2]***<RXDLY>=1

2.7V ≤DVDD5=AVDD5< 4.5V

Parameter	Symbol	Equation		fsysm=80MHz k1=k2=1		Unit
		Min	Max	Min	Max	
TSPIxSCK output frequency	f_{CYC}	-	10	-	10	MHz
TSPIxSCK output cycle	t_{CYC}	100	-	100	-	ns
TSPIxSCK low level output pulse width	t_{WL}	(t_{CYC}/2) - 16	-	9	-	ns
TSPIxSCK high level output pulse width	t_{WH}	(t_{CYC}/2) - 16	-	9	-	ns
TSPIxCSn output ← TSPIxSCK rise/fall time	t_{CSU}	(t_{CYC} × k1) - 20	(t_{CYC} × k1) + 11	80	111	ns
TSPIxSCK rise/fall → TSPIxCSn hold time	t_{CHD}	(t_{CYC} × (k2 + 0.5))-20	-	130	-	ns
TSPIxRXD Input ← TSPIxSCK rise/fall time	t_{DSU}	45 - 2×T (Note)	-	20	-	ns
TSPIxSCK rise/fall → TSPIxRXD hold time	t_{DHD}	2×T-10.5 (Note)	-	14.5	-	ns
TSPIxSCK rise/fall → TSPIxTXD delay time	t_{ODLY1}	-18	-	-18	-	ns
TSPIxSCK rise/fall → TSPIxTXD delay time	t_{ODLY2}	-	16	-	16	ns
TSPIxCSn fall → TSPIxTXD delay time	t_{ODLY3}	(t_{CYC} × (k1 - 0.5))-25	(t_{CYC} × (k1 - 0.5))+13	25	63	ns

Note: In this case ***[TSPIxCR2]***<RXDLY>=1

Downloaded from Arrow.com.

(2) Slave in SPI mode

4.5V ≤DVDD5=AVDD5≤ 5.5V

Parameter	Symbol	Equation		fsysm=80MHz k1=1		Unit
		Min	Max	Min	Max	
TSPIxSCK Input frequency	f_{CYC}	-	10	-	10	MHz
TSPIxSCK Input cycle	t_{CYC}	100	-	100	-	ns
TSPIxSCK low level Input pulse width	t_{WL}	37	-	37	-	ns
TSPIxSCK high level Input pulse width	t_{WH}	37	-	37	-	ns
TSPIxCSIN Input (1st) ← TSPIxSCK rise/fall time	t_{CSU1}	170	-	170	-	ns
TSPIxCSIN Input (2nd) ← TSPIxSCK rise/fall time	t_{CSU2}	80	-	80	-	ns
TSPIxSCK rise/fall → TSPIxCSIN hold time (1st)	t_{CHD}	80	-	80	-	ns
TSPIxSCK rise/fall → TSPIxCSIN hold time (2nd)	t_{CHD}	7	-	7	-	ns
TSPIxRXD Input ← TSPIxSCK rise/fall time	t_{DSU}	7	-	7	-	ns
TSPIxSCK rise/fall → TSPIxRXD hold time	t_{DHD}	10	-	10	-	ns
TSPIxSCK rise/fall → TSPIxTXD delay time	t_{ODLY1}	0	-	0	-	ns
TSPIxSCK rise/fall → TSPIxTXD delay time	t_{ODLY2}	-	38	-	38	ns
TSPIxCSIN fall → TSPIxTXD delay time	t_{ODLY3}	-	55	-	55	ns
TSPIxCSIN high level input pulse width (1st)	t_{WDIS}	T × 5 + 20	-	82.5	-	ns
TSPIxCSIN high level input pulse width (2nd)	t_{WDIS}	T × 2 + 20	-	45	-	ns

Downloaded from Arrow.com.

2.7V ≤DVDD5=AVDD5<4.5V

Parameter	Symbol	Equation		fsysm=80MHz k1=1		Unit
		Min	Max	Min	Max	
TSPIxSCK Input frequency	f_{CYC}	-	10	-	10	MHz
TSPIxSCK Input cycle	t_{CYC}	100	-	100	-	ns
TSPIxSCK low level Input pulse width	t_{WL}	37	-	37	-	
TSPIxSCK high level Input pulse width	t_{WH}	37	-	37	-	
TSPIxCSIN Input (1st) ← TSPIxSCK rise/fall time	t_{CSU1}	170	-	170	-	
TSPIxCSIN Input (2nd) ← TSPIxSCK rise/fall time	t_{CSU2}	80	-	80	-	
TSPIxSCK rise/fall → TSPIxCSIN hold time (1st)	t_{CHD}	80	-	80	-	
TSPIxSCK rise/fall → TSPIxCSIN hold time (2nd)	t_{CHD}	7	-	7	-	
TSPIxRXD Input ← TSPIxSCK rise/fall time	t_{DSU}	7	-	7	-	
TSPIxSCK rise/fall → TSPIxRXD hold time	t_{DHD}	10	-	10	-	
TSPIxSCK rise/fall → TSPIxTXD delay time	t_{ODLY1}	0	-	0	-	
TSPIxSCK rise/fall → TSPIxTXD delay time	t_{ODLY2}	-	49	-	49	
TSPIxCSIN fall → TSPIxTXD delay time	t_{ODLY3}	-	55	-	55	
TSPIxCSIN high level input pulse width (1st)	t_{WDIS}	T × 5 + 20	-	82.5	-	
TSPIxCSIN high level input pulse width (2nd)	t_{WDIS}	T × 2 + 20	-	45	-	

Downloaded from Arrow.com.

(3) Master in SIO Mode

4.5V ≤DVDD5=AVDD5≤ 5.5V

Parameter	Symbol	Equation		fsysm=80MHz		Unit
		Min	Max	Min	Max	
TSPIxSCK Output Frequency	f_{CYC}	-	10	-	10	MHz
TSPIxSCK Output cycle	t_{CYC}	100	-	100	-	ns
TSPIxSCK Low level Output pulse width	t_{WL}	(t_{CYC}/2)-13	-	37	-	
TSPIxSCK High level Output pulse width	t_{WH}	(t_{CYC}/2)-13	-	37	-	
TSPIxRXD Input ← TSPIxSCK rise/fall time	t_{DSU}	35-2×T (Note)	-	10	-	
TSPIxSCK rise/fall → TSPIxRXD hold time	t_{DHD}	2×T-10.5 (Note)	-	14.5	-	
TSPIxSCK rise/ fall → TSPIxTXD delay time	t_{ODLY1}	-18	-	-18	-	
TSPIxSCK Rise/ fall → TSPIxTXD delay time	t_{ODLY2}	-	16	-	16	

Note: In this case ***[TSPIxCR2]***<RXDLY>=1

2.7V≤DVDD5=AVDD5<4.5V

Parameter	Symbol	Equation		fsysm=80MHz		Unit
		Min	Max	Min	Max	
TSPIxSCK Output Frequency	f_{CYC}	-	10	-	10	MHz
TSPIxSCK Output cycle	t_{CYC}	100	-	100	-	ns
TSPIxSCK Low level output pulse width	t_{WL}	(t_{CYC}/2)-16	-	9	-	
TSPIxSCK High level output pulse width	t_{WH}	(t_{CYC}/2)-16	-	9	-	
TSPIxRXD Input ← TSPIxSCK rise/fall time	t_{DSU}	45-2×T (Note)	-	20	-	
TSPIxSCK rise/fall → TSPIxRXD hold time	t_{DHD}	2×T-10.5 (Note)	-	14.5	-	
TSPIxSCK rise/fall → TSPIxTXD delay time	t_{ODLY1}	-18	-	-18	-	
TSPIxSCK rise/fall → TSPIxTXD delay time	t_{ODLY2}	-	16	-	16	

Note: In this case ***[TSPIxCR2]***<RXDLY>=1

Downloaded from Arrow.com.

(4) Slave in SIO mode

4.5V ≤ DVDD5=AVDD5 ≤5.5V

Parameter	Symbol	Equation		fsysm=80MHz		Unit
		Min	Max	Min	Max	
TSPIxSCK Input Frequency	f_{CYC}	-	10	-	10	MHz
TSPIxSCK Input Cycle	t_{CYC}	100	-	100	-	ns
TSPIxSCK Low level Input Pulse Width	t_{WL}	37	-	37	-	
TSPIxSCK High level Input Pulse Width	t_{WH}	37	-	37	-	
TSPIxSCK rise/fall → TSPIxCSIN hold time	t_{CHD}	7	-	7	-	
TSPIxRXD Input ← TSPIxSCK rise/fall time	t_{DSU}	7	-	7	-	
TSPIxSCK rise/fall → TSPIxRXD hold time	t_{DHD}	10	-	10	-	
TSPIxSCK rise/fall → TSPIxTXD delay time	t_{ODLY1}	0	-	0	-	
TSPIxSCK rise/fall → TSPIxTXD delay time	t_{ODLY2}	-	38	-	38	

2.7V ≤ DVDD5=AVDD5<4.5V

Parameter	Symbol	Equation		fsysm=80MHz		Unit
		Min	Max	Min	Max	
TSPIxSCK Input Frequency	f_{CYC}	-	10	-	10	MHz
TSPIxSCK Input Cycle	t_{CYC}	100	-	100	-	ns
TSPIxSCK Low level Input Pulse Width	t_{WL}	37	-	37	-	
TSPIxSCK High level Input Pulse Width	t_{WH}	37	-	37	-	
TSPIxSCK rise/fall → TSPIxCSIN hold time	t_{CHD}	7	-	7	-	
TSPIxRXD Input ← TSPIxSCK rise/fall time	t_{DSU}	7	-	7	-	
TSPIxSCK rise/fall → TSPIxRXD hold time	t_{DHD}	10	-	10	-	
TSPIxSCK rise/fall → TSPIxTXD delay time	t_{ODLY1}	0	-	0	-	
TSPIxSCK rise/fall → TSPIxTXD delay time	t_{ODLY2}	-	49	-	49	

Downloaded from Arrow.com.

(1) 1st clock edge sampling (Master)

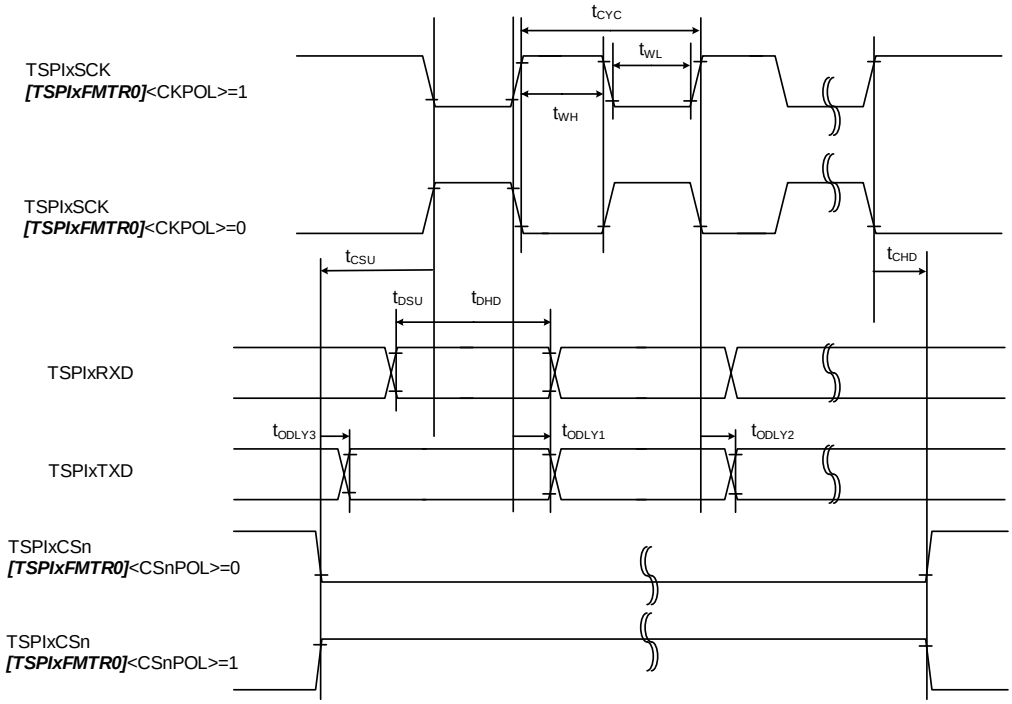

Figure 7.3 1st clock edge sampling (Master)

(2) 2nd clock edge sampling (Master)

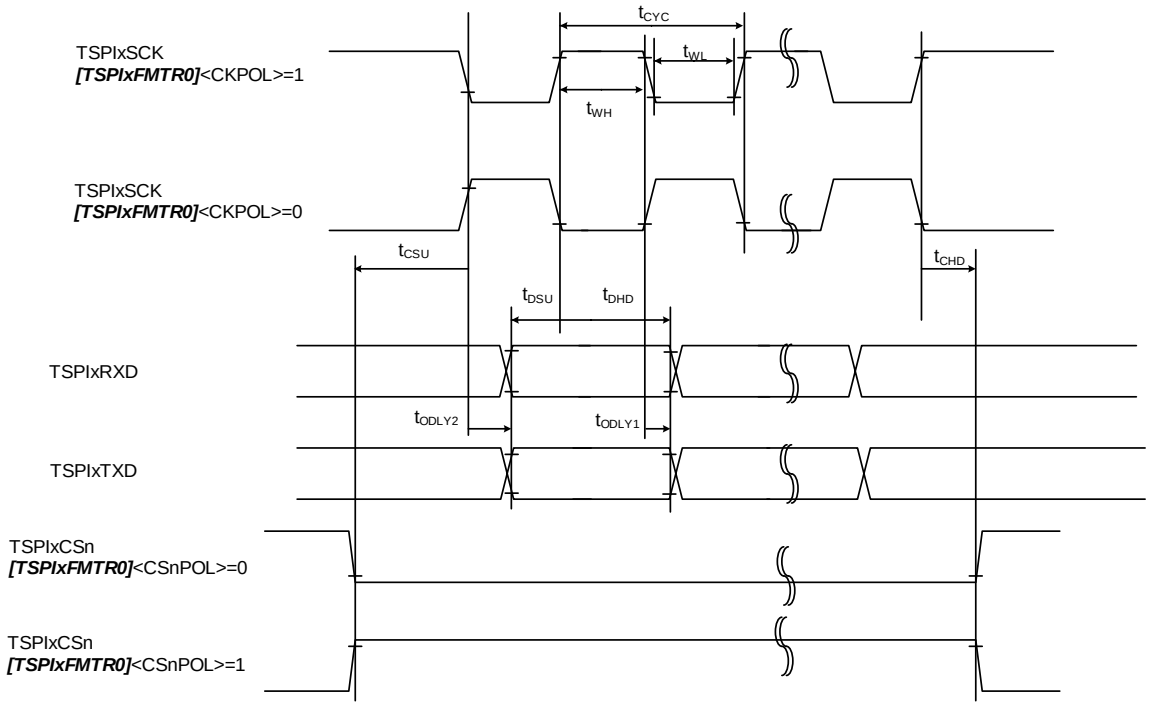

Figure 7.4 2nd clock edge sampling (Master)

Downloaded from Arrow.com.

(3) 1st clock edge sampling (slave)

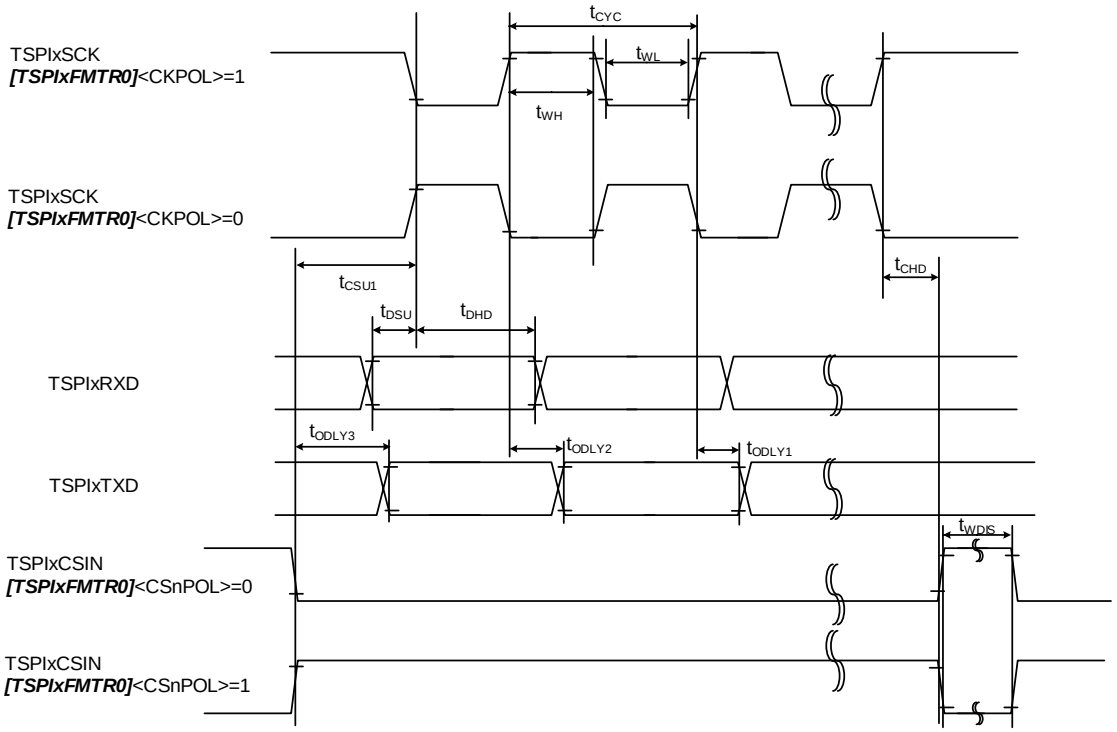

Figure 7.5 1st clock edge sampling (slave)

(4) 2nd clock edge sampling (slave)

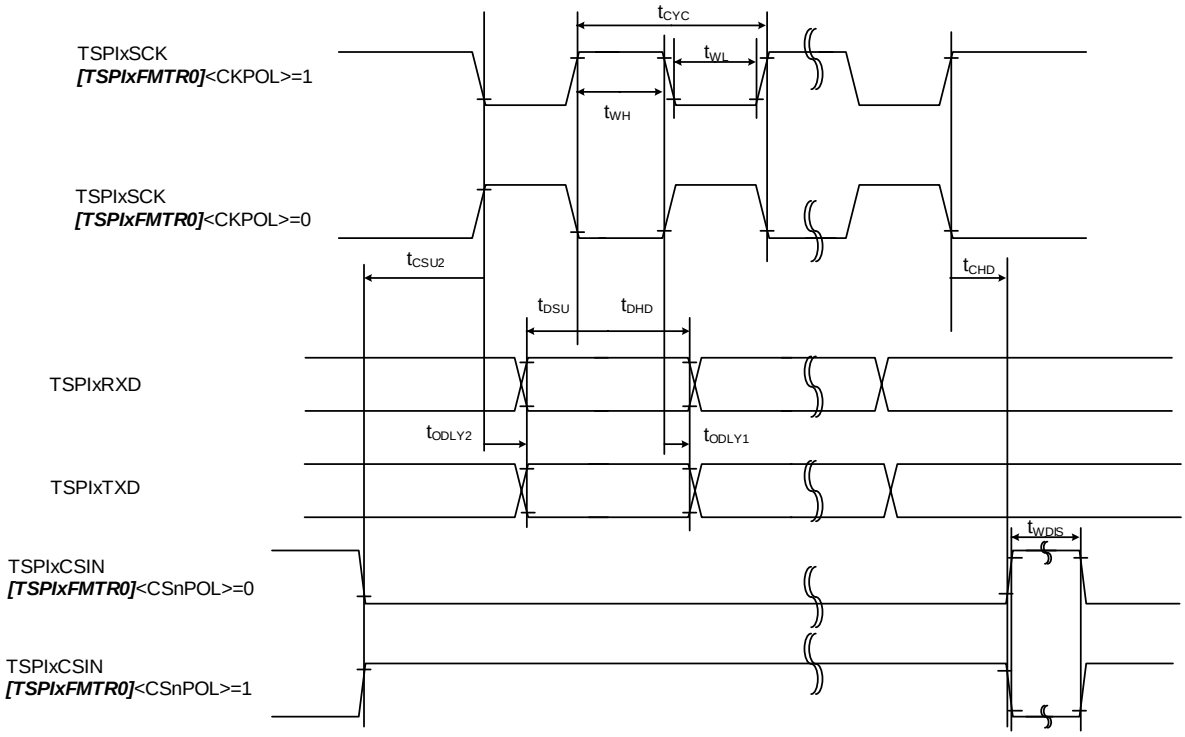

Figure 7.6 2nd clock edge sampling (Slave)

Downloaded from Arrow.com.

7.10.2. I²C Interface (I2C)

7.10.2.1. Conditions

The AC characteristics are as follows:

- DVDD5=AVDD5= 2.7 to 5.5 V
- Ta = -40 to 105°C
- Output level: Low = 0.4V
- Input level: High = 0.7 × DVDD5, Low = 0.3 × DVDD5
- Load capacity: CL = 30pF
- External pull-up resistor: R_p = 2.2 kΩ

Note: DVDD5 is a generic name for DVDD5A, and DVDD5B.

7.10.2.2. AC Electrical Characteristics

Parameter		Symbol	Standard mode		Fast mode		Unit
			Min	Max	Min	Max	
SCL clock frequency		f_{SCL}	0	100	0	400	kHz
Start condition hold time		$t_{HD;STA}$	4.0	-	0.6	-	µs
SCL clock Low width (Input) (Note1)		t_{LOW}	4.7	-	1.3	-	
SCL clock High width (Input) (Note1)		t_{HIGH}	4.0	-	0.6	-	
Re-start condition setup time	<SREN>=0	$t_{SU;STA}$	4.7 (Note3)	-	0.6 (Note3)	-	
	<SREN>=1	$t_{SU;STA}$	4.7 (Note3)	-	0.6	-	
Data hold time (Input) (Note2)		$t_{HD;DAT}$	0	-	0	-	
Data setup time		$t_{SU;DAT}$	250	-	100	-	ns
Stop condition setup time		$t_{SU;STO}$	4.0	-	0.6	-	µs
Bus free time between stop condition and start condition (Note3)		t_{BUF}	4.7	-	1.3	-	

Note1: On I²C bus standard, the maximum speed of standard mode/fast mode is 100kHz/400 kHz, respectively. For the frequency setting of the internal SCL clock, refer to the calculation formula in chapter 3.3.2 of "I2C Interface" in reference manual .

Note2: On I²C bus standard, it is described that a data internal hold time should be set at least 300 ns to avoid unstable condition on the falling of the SCL when the SDA is input; however, this precaution is not supported in this MCU. Also, the edge slope control function for the SCL is not available. Therefore, when the customer designs the MCU, make sure to follow the data hold time (input) in the table above. Note that t_r/t_f on the SCL/SDA should be included in the data hold time.

Note3: To keep the time by software.

Downloaded from Arrow.com.

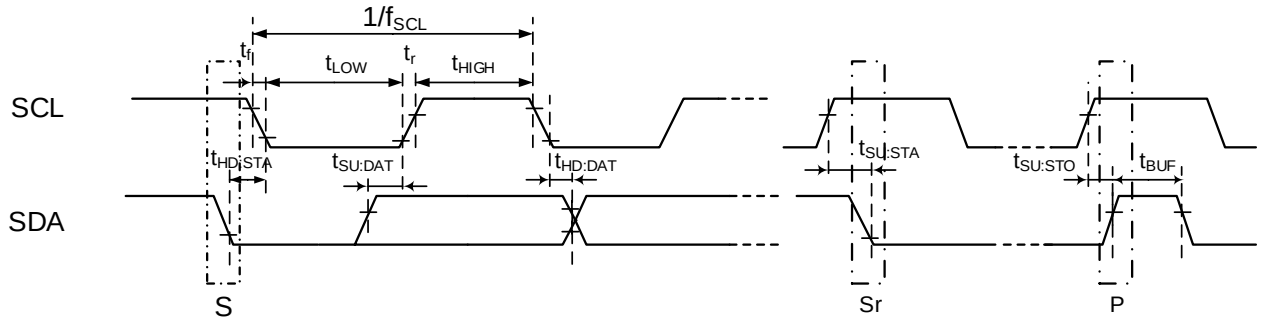

Figure 7.7 AC timing of I2C

Downloaded from Arrow.com.

7.10.3. I²C Interface Version A(EI2C)

7.10.3.1. Conditions

The AC characteristics are as follows:

- DVDD5=AVDD5= 2.7 to 5.5 V
- Ta = -40 to 105°C
- Output level: Low = 0.4V
- Input level: High = 0.7 × DVDD5, Low = 0.3 × DVDD5
- Load capacity: CL = 30pF
- External pull-up resistor: R_p = 2.2 kΩ

Note: DVDD5 is a generic name for DVDD5A, and DVDD5B.

7.10.3.2. AC Electrical Characteristics

Parameter	Symbol	Standard mode		Fast mode		Fast mode plus		Unit
		Min	Max	Min	Max	Min	Max	
SCL clock frequency	f_{SCL}	0	100	0	400	0	1000	kHz
Start condition hold time	$t_{HD;STA}$	4.0	-	0.6	-	0.26	-	μs
SCL clock Low width (Input) (Note1)	t_{LOW}	4.7	-	1.3	-	0.5	-	
SCL clock High width (Input) (Note1)	t_{HIGH}	4.0	-	0.6	-	0.26	-	
Re-start condition setup time	$t_{SU;STA}$	4.7	-	0.6	-	0.26	-	
Data hold time (Input) (Note2)	$t_{HD;DAT}$	0	-	0	-	0	-	
Data setup time	$t_{SU;DAT}$	250	-	100	-	50	-	ns
Stop condition setup time	$t_{SU;STO}$	4.0	-	0.6	-	0.26	-	μs
Bus free time between stop condition and start condition (Note3)	t_{BUF}	4.7	-	1.3	-	0.5	-	

Note1: On I²C bus standard, the maximum speed of standard mode/fast mode/fast mode plus is 100kHz/400 kHz/1000kHz, respectively. For the frequency setting of the internal SCL clock, refer to the calculation formula in chapter 3.3.1 of "I²C Interface Version A" in reference manual .

Note2: On I²C bus standard, it is described that a data internal hold time should be set at least 300 ns to avoid unstable condition on the falling of the SCL when the SDA is input; however, this precaution is not supported in this MCU. Also, the edge slope control function for the SCL is not available. Therefore, when the customer designs the MCU, make sure to follow the data hold time (input) in the table above. Note that t_r/t_f on the SCL/SDA should be included in the data hold time.

Note3: To keep the time by software.

Downloaded from Arrow.com.

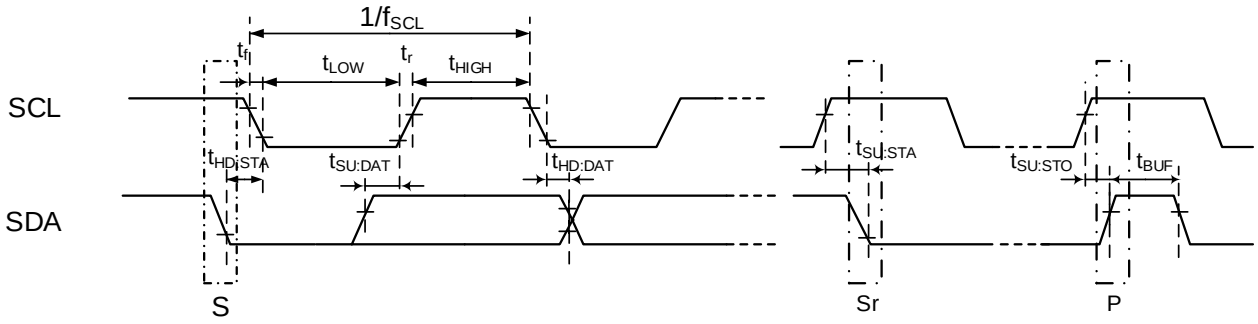

Figure 7.8 AC timing of EI2C

7.10.4. 32-bit Timer Event Counter (T32A)

This section describes AC characteristics of T32AxINA0/A1, T32AxINB0/B1, and T32AxINC0/C1.

7.10.4.1. Conditions

The AC characteristics are as follows:

- DVDD5=AVDD5= 2.7 to 5.5 V
- Ta = -40 to 105°C
- Input level: High = 0.75 × DVDD5, Low = 0.25 × DVDD5
- Load capacity: CL = 30pF

Note: DVDD5 is a generic name for DVDD5A, and DVDD5B.

Downloaded from Arrow.com.

7.10.4.2. AC Electrical Characteristics

"T" in the table below indicates the operation clock cycle of the T32A. The operation clock of the T32A is the same cycle as the ΦT0m clock. This cycle is depending on the Prescaler Clock setting.

(1) Operation other than the pulse count

Parameter	Symbol	Calculation		ΦT0m=80 MHz		Unit
		Min	Max	Min	Max	
Low level pulse width	t_{VCKL}	2T + 20	-	45	-	ns
High level pulse width	t_{VCKH}	2T + 20	-	45	-	

(2) At the pulse count

Parameter	Symbol	Calculation		ΦT0m=80 MHz NF=0		Unit
		Min	Max	Min	Max	
Pulse cycle	t_{DCYC}	1000	-	1000	-	ns
Low level pulse width	t_{PWL}	500	-	500	-	
High level pulse width	t_{PWH}	500	-	500	-	
Input setup	t_{ABS}	(NF+1) × T +20	-	32.5	-	
Input hold	t_{ABH}	(NF+1) × T +20	-	32.5	-	

NF Value depends on the ***[T32AxPLSCR]***<NF[1:0]> setting as follows.

[T32AxPLSCR]<NF[1:0]>	NF Value of Formula
00	0
01	2
10	4
11	8

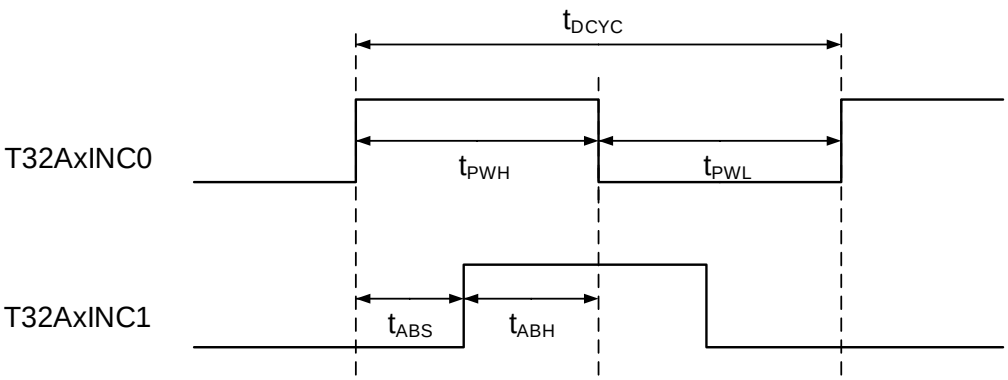

Figure 7.9 Count Pulse input

Downloaded from Arrow.com.

7.10.5. External Interrupt

7.10.5.1. Conditions

The AC characteristics are as follows:

- DVDD5=AVDD5= 2.7V to 5.5V
- Ta = -40 to 105°C
- Input level: High = 0.75 × DVDD5, Low = 0.25 × DVDD5
- Load capacity: CL = 30pF

Note: DVDD5 is a generic name for DVDD5A, and DVDD5B.

7.10.5.2. AC Electrical Characteristics

"T" in the table below indicates the cycle of the system clock (fsys).

(1) NORMAL, IDLE mode

Parameter	Symbol	Calculation		fsys=160 MHz		Unit
		Min	Max	Min	Max	
Low level pulse width	t_{INTAL1}	T + 100	-	106.25	-	ns
High level pulse width	t_{INTAH1}	T + 100	-	106.25	-	

(2) STOP1 mode

Parameter	Symbol	Calculation				Unit
		Min	Max	Min	Max	
Low level pulse width	t_{INTCL2}	125	-	125	-	ns
High level pulse width	t_{INTCH2}	125	-	125	-	

Downloaded from Arrow.com.

7.10.6. Trigger Input (TRGINx)

7.10.6.1. Conditions

The AC characteristics are as follows:

- DVDD5=AVDD5= 2.7V to 5.5V
- Ta = -40 to 105°C
- Input level: High = 0.75 × DVDD5, Low = 0.25 × DVDD5
- Load capacity: CL = 30pF

Note: DVDD5 is a generic name for DVDD5A, and DVDD5B.

7.10.6.2. AC Electrical Characteristics

"T" in the table below indicates the cycle of the system clock (fsysm).

Parameter	Symbol	Calculation		fsysm=80 MHz		Unit
		Min	Max	Min	Max	
Low level pulse width	t_{ADL}	2T + 20	-	45	-	ns
High level pulse width	t_{ADH}	2T + 20	-	45	-	

Downloaded from Arrow.com.

7.10.7. Debug Communication

7.10.7.1. Conditions

The AC characteristics are as follows:

- DVDD5=AVDD5= 2.7V to 5.5V
- Ta = -40 to 80°C
- Output level: High = 0.8 ×DVDD5, Low = 0.2×DVDD5
- Input level: High = 0.75 × DVDD5, Low = 0.25 × DVDD5
- Load capacity: CL = 30pF

Note: DVDD5 is a generic name for DVDD5A, and DVDD5B.

7.10.7.2. SWD Interface

4.5V ≤DVDD5=AVDD5≤ 5.5V

Parameter	Symbol	Min	Max	Unit
High level pulse width of CLK	t_{dckh}	50	-	ns
Low level pulse width of CLK	t_{dckl}	50	-	
Output data hold from on the rising edge of CLK	t_{d1}	1	-	
Output data valid from on the rising edge of CLK	t_{d2}	-	35	
From input data valid to the rising edge of CLK	t_{ds}	20	-	
Input data hold from on the rising edge of CLK	t_{dh}	15	-	

2.7V ≤DVDD5=AVDD5< 4.5V

Parameter	Symbol	Min	Max	Unit
High level pulse width of CLK	t_{dckh}	50	-	ns
Low level pulse width of CLK	t_{dckl}	50	-	
Output data hold from on the rising edge of CLK	t_{d1}	1	-	
Output data valid from on the rising edge of CLK	t_{d2}	-	45	
From input data valid to the rising edge of CLK	t_{ds}	20	-	
Input data hold from on the rising edge of CLK	t_{dh}	15	-	

Downloaded from Arrow.com.

7.10.7.3. JTAG Interface

4.5V ≤DVDD5=AVDD5≤ 5.5V

Parameter	Symbol	Min	Max	Unit
High level pulse width of CLK	t_{dckh}	50	-	ns
Low level pulse width of CLK	t_{dckl}	50	-	
Output data hold from on the rising edge of CLK	t_{d3}	0	-	
Output data valid from on the rising edge of CLK	t_{d4}	-	35	
From input data valid to the rising edge of CLK	t_{ds}	20	-	
Input data hold from on the rising edge of CLK	t_{dh}	15	-	

2.7V ≤DVDD5=AVDD5< 4.5V

Parameter	Symbol	Min	Max	Unit
High level pulse width of CLK	t_{dckh}	50	-	ns
Low level pulse width of CLK	t_{dckl}	50	-	
Output data hold from on the rising edge of CLK	t_{d3}	0	-	
Output data valid from on the rising edge of CLK	t_{d4}	-	45	
From input data valid to the rising edge of CLK	t_{ds}	20	-	
Input data hold from on the rising edge of CLK	t_{dh}	15	-	

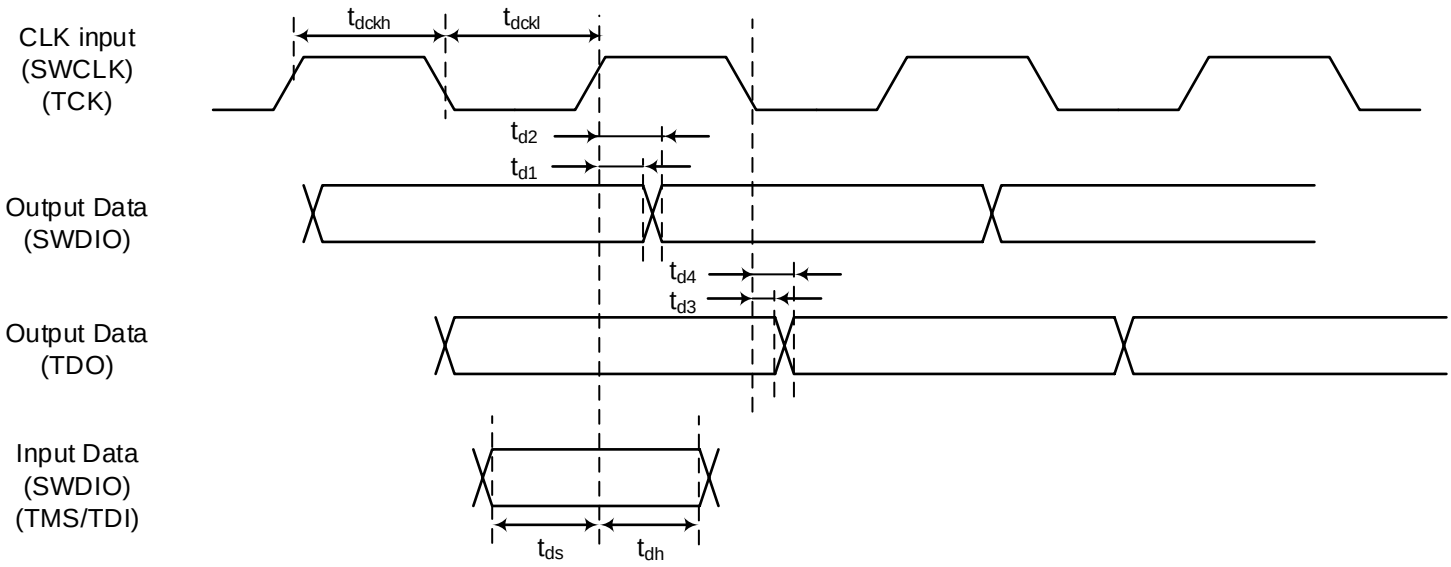

Figure 7.10 JTAG/SW waveform

Downloaded from Arrow.com.

7.10.7.4. ETM Trace

5.0V≤DVDD5=AVDD5≤5.5V
Ta=70°C

Parameter	Symbol	Min	Max	Unit
TRACECLK cycle	t_{tclk}	25	-	ns
Data valid from rising on TRACECLK	t_{setupr}	2	-	
TRACEDATA hold from on the rising edge of TRACECLK	t_{holdr}	1	-	
TRACEDATA valid from on the falling edge of TRACECLK	t_{setupf}	2	-	
TRACEDATA hold from on the falling edge of TRACECLK	t_{holdf}	1	-	

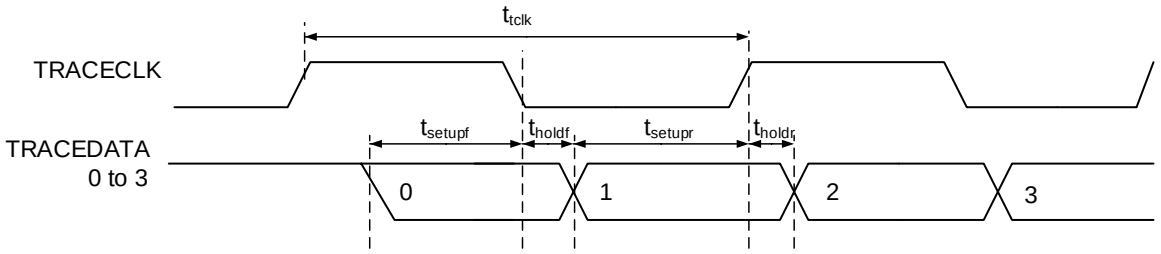

Figure 7.11 Trace signal waveform

Downloaded from Arrow.com.

7.10.7.5. Non Break Debug Interface (NBDIF)

Parameter	Symbol	Min	Max	Unit
NBDCLK cycle time	t_{NDCYC}	80	-	ns
NBDCLK low level pulse width	t_{NDL}	35	-	
NBD DATA output delay time	t_{NDD}	-	60	
NBD DATA output hold time	t_{NDHD}	5	-	
NBD DATA setup time	t_{NDS}	20	-	
NBD DATA hold time	t_{NDH}	5	-	
NBDSYNC setup time	t_{NDSYS}	20	-	
NBDSYNC output hold time	t_{NDSYH}	5	-	

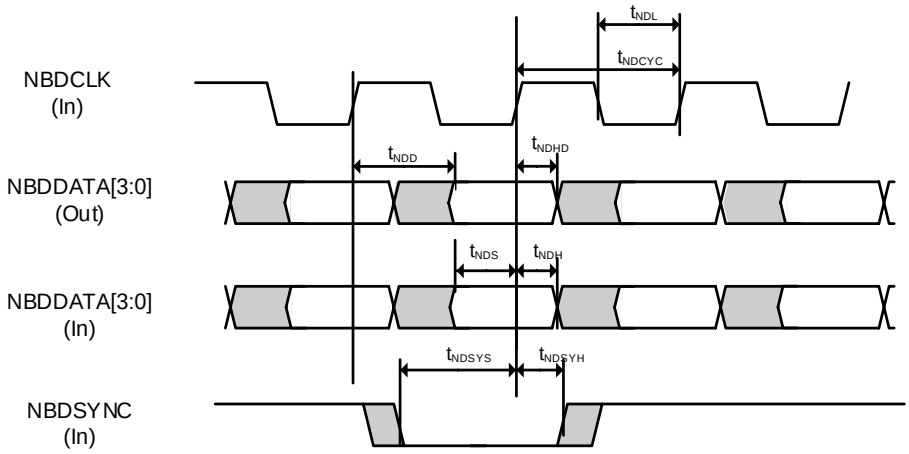

Figure 7.12 AC timing of NBDIF

Downloaded from Arrow.com.

7.10.8. Noise Filter Characteristics

Parameter	Condition	Min	Typ.	Max	Unit
Noise cancel width	DVDD5 = 2.7 to 5.5V Ta = -40 to 105°C	15	30	60	ns

Note: DVDD5 is a generic name for DVDD5A, and DVDD5B.

7.10.9. External Clock Input

7.10.9.1. Conditions

The AC characteristics are as follows:

- DVDD5=AVDD5= 2.7V to 5.5V
- Ta = -40 to 105°C
- Input level: High = 0.75 × DVDD5, Low = 0.25 × DVDD5
- Load capacity: CL = 30pF

Note: DVDD5 is a generic name for DVDD5A, and DVDD5B.

7.10.9.2. AC Electrical Characteristics

Parameter	Symbol	Min	Typ.	Max	Unit
Clock frequency($1/t_{ehcin}$)	$f_{EHCLKIN}$	6	-	10	MHz
Clock duty	-	45	-	55	%
Clock rise time	t_r	-	-	10	ns
Clock fall time	t_f	-	-	10	ns

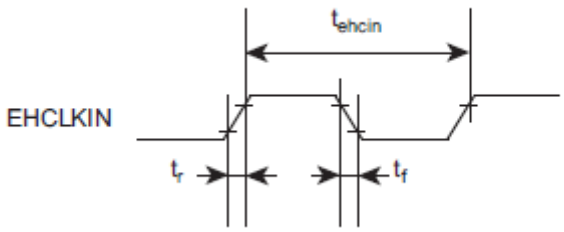

Figure 7.13 External clock input waveform

Downloaded from Arrow.com.

7.11. Flash Memory Characteristics

7.11.1. Code Flash

DVDD5=2.7V to 5.5V
Ta= -40 to 105°C

Parameter	Condition	Min	Typ.	Max	Unit
Endurance		-	-	100,000	cycles
Programming time	Word Program time	-	22.6	-	µs
Erase time	Page Erase time	1.1	-	4.2	ms
	Block Erase time	8.4	-	33.6	
	Area Erase time(Note2)	-	9.1	-	

Note1: DVDD5 is a generic name for DVDD5A, and DVDD5B. DVSS is a generic name for DVSSA, DVSSB, and DVSSC.

Note2: No block with effective protection.

7.11.2. Data Flash

DVDD5=2.7V to 5.5V
Ta= -40 to 105°C

Parameter	Condition	Min	Typ.	Max	Unit
Endurance		-	-	100,000	cycles
Programming time		-	78	-	µs
Erase time	Page Erase time	1.1	-	4.2	ms
	Block Erase time	16.2	-	64.6	
	Area Erase time(Note2)	-	9.1	-	

Note1: DVDD5 is a generic name for DVDD5A, and DVDD5B. DVSS is a generic name for DVSSA, DVSSB, and DVSSC.

Note2: No block with effective protection.

Downloaded from Arrow.com.

7.11.3. Chip Erase

DVDD5=2.7V to 5.5V
Ta= -40 to 105°C

Parameter	Condition	Min	Typ.	Max	Unit
Chip Erase time	Erasing of Code Flash, Data Flash. Protect Bits (Code), Protect Bits (Data), and Security Bits	21.5	-	30.7	ms

Note1: DVDD5 is a generic name for DVDD5A, and DVDD5B. DVSS is a generic name for DVSSA, DVSSB, and DVSSC.

Note2: Total execution time of automatic chip erasing, automatic protect bit erasing (code and data) and automatic security bit erasing. An execution time of automatic chip erasing is when no blocks are protected.

7.12. Regulator

DVDD5=2.7V to 5.5V
Ta= -40 to 105°C

Parameter	Condition	Min	Typ.	Max	Unit
Capacitance of REGOUT1 capacitor		0.8	4.7	5.64	µF
Capacitance of REGOUT2 capacitor		0.8	4.7	5.64	

Note: DVDD5 is a generic name for DVDD5A, and DVDD5B. DVSS is a generic name for DVSSA, DVSSB, and DVSSC.

Downloaded from Arrow.com.

7.13. Oscillation Circuit

7.13.1. Internal Oscillator

DVDD5=2.7V to 5.5V
Ta= -40 to 105°C

Parameter	Symbol	Condition	Min	Typ.	Max	Unit
Oscillation frequency	f_{IHOSC1}	-	9.9	10	10.1	MHz
	f_{IHOSC2}		-	10	-	

Note: DVDD5 is a generic name for DVDD5A, and DVDD5B. DVSS is a generic name for DVSSA, DVSSB, and DVSSC.

7.13.2. External Oscillator

DVDD5=2.7V to 5.5V
Ta= -40 to 105°C

Parameter	Symbol	Condition	Min	Typ.	Max	Unit
Oscillation frequency	f_{EHOSC}	-	6	-	12	MHz

Note1: DVDD5 is a generic name for DVDD5A, and DVDD5B. DVSS is a generic name for DVSSA, DVSSB, and DVSSC.

Note2: Please contact the oscillator vendor, regarding the matching data of the device and the oscillator.

7.13.3. Oscillation Circuit

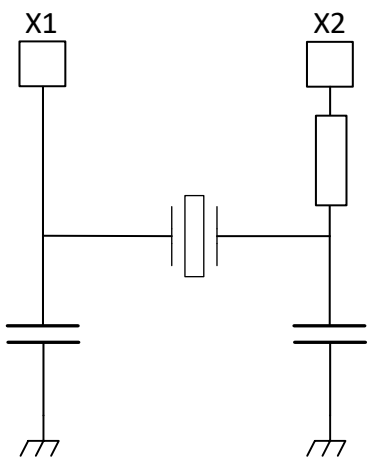

Figure 7.14 Oscillation circuit sample

To obtain a stable oscillation, load capacity and the position of the oscillator must be configured properly.

Since these factors are strongly affected by substrate patterns, please evaluate oscillation stability using the substrate you use.

This product has been evaluated with the oscillator of following vendor. Please refer this information when selecting external parts.

Downloaded from Arrow.com.

7.13.4. Ceramic resonator

This product has been evaluated with the ceramic resonator of Murata Manufacturing Co., Ltd.
Please refer to the company's website for details.

7.13.5. Crystal unit

This product has been evaluated with the crystal unit of KYOCERA Corporation and MURATA MANUFACTURING Corporation.
Please refer to each company's website for details.

7.13.6. Precautions for designing printed circuit board

Be sure to design printed circuit board patterns that connect a crystal unit with other oscillation elements so that the length of such patterns become shortest possible to prevent deterioration of characteristics due to stray capacitances and wiring inductance. For multilayer circuit boards, it is important not to wire the ground and other signal patterns right beneath the oscillation circuit. For more information, please refer to the URL of the crystal unit vendor.

Downloaded from Arrow.com.

8. Package Dimensions

8.1. P-LQFP100-1414-0.50-002

Unit: mm

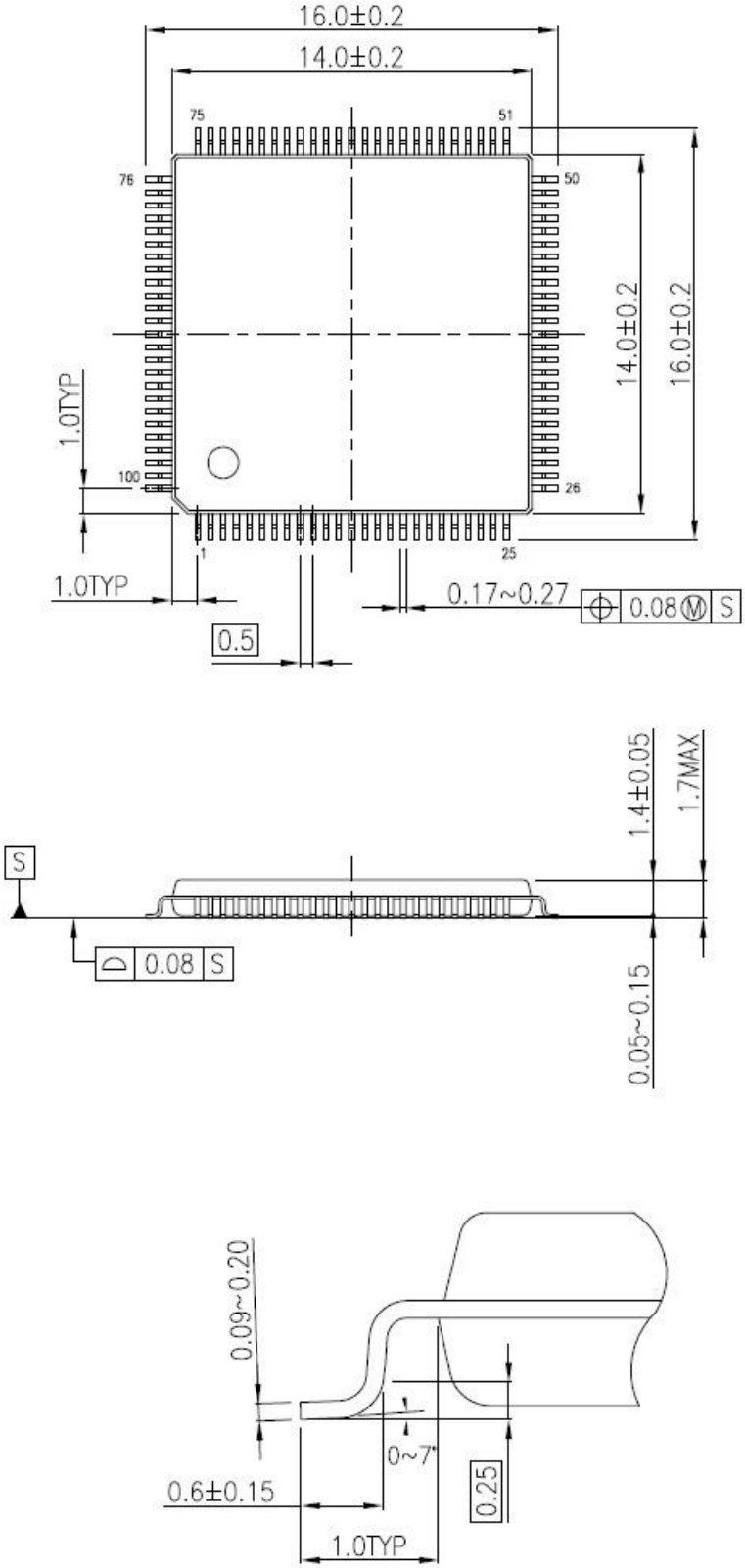

Downloaded from Arrow.com.

8.2. P-QFP100-1420-0.65-003

Unit: mm

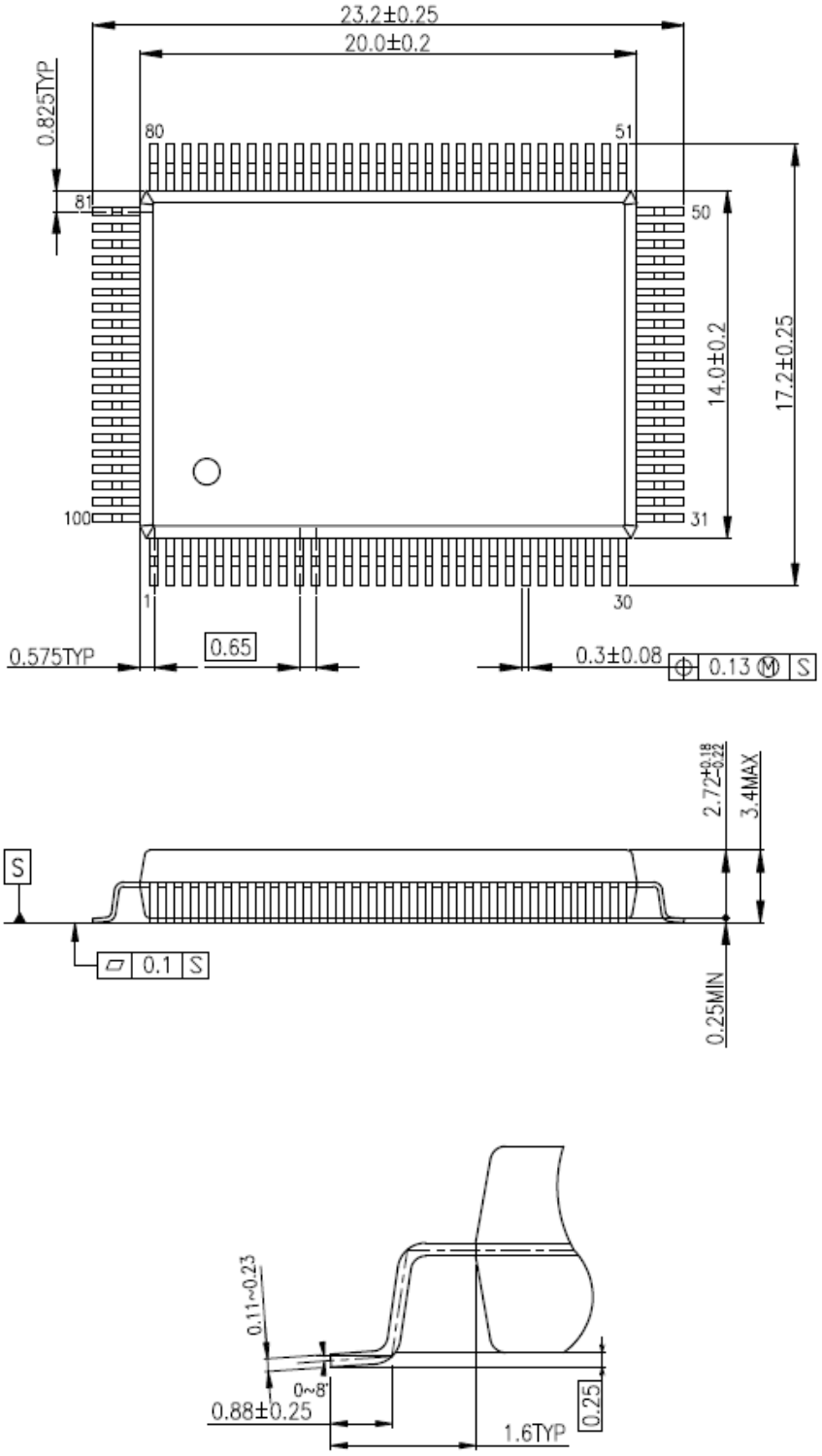

Downloaded from Arrow.com.

8.3. P-LQFP80-1212-0.50-005

Unit: mm

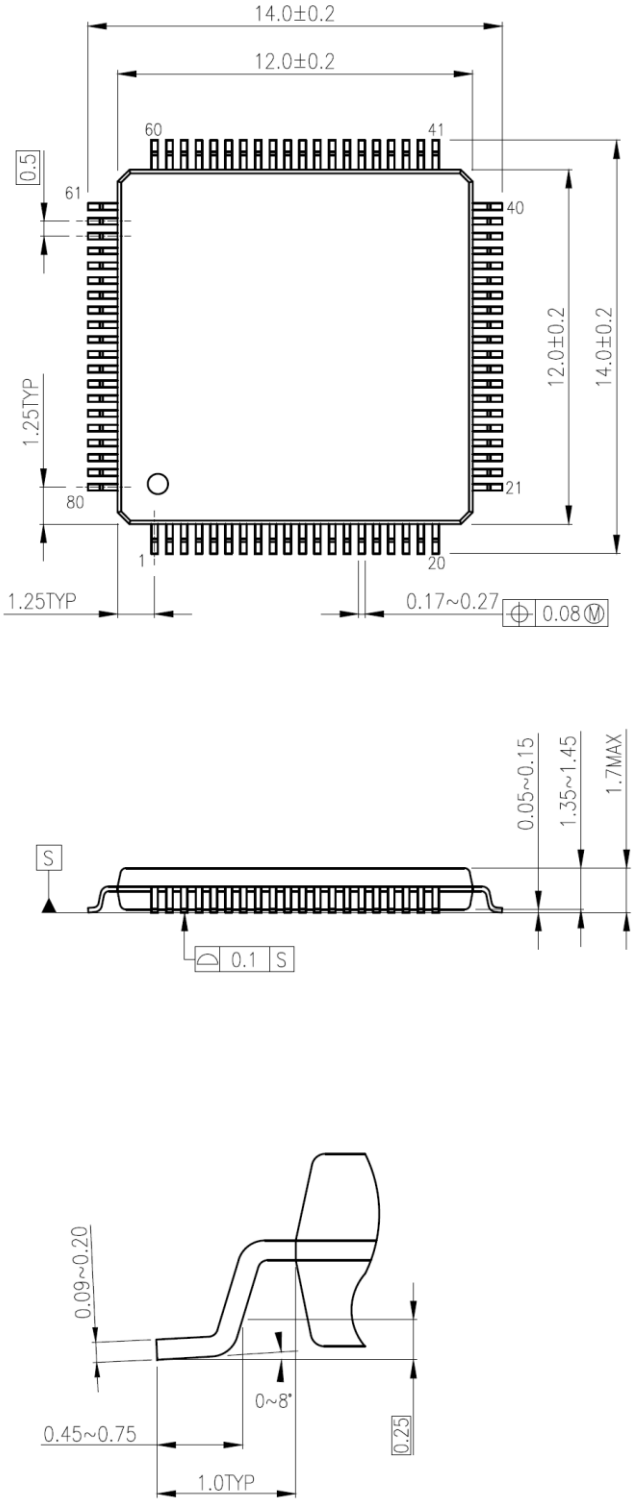

Downloaded from Arrow.com.

8.4. P-LQFP64-1010-0.50-003

Unit: mm

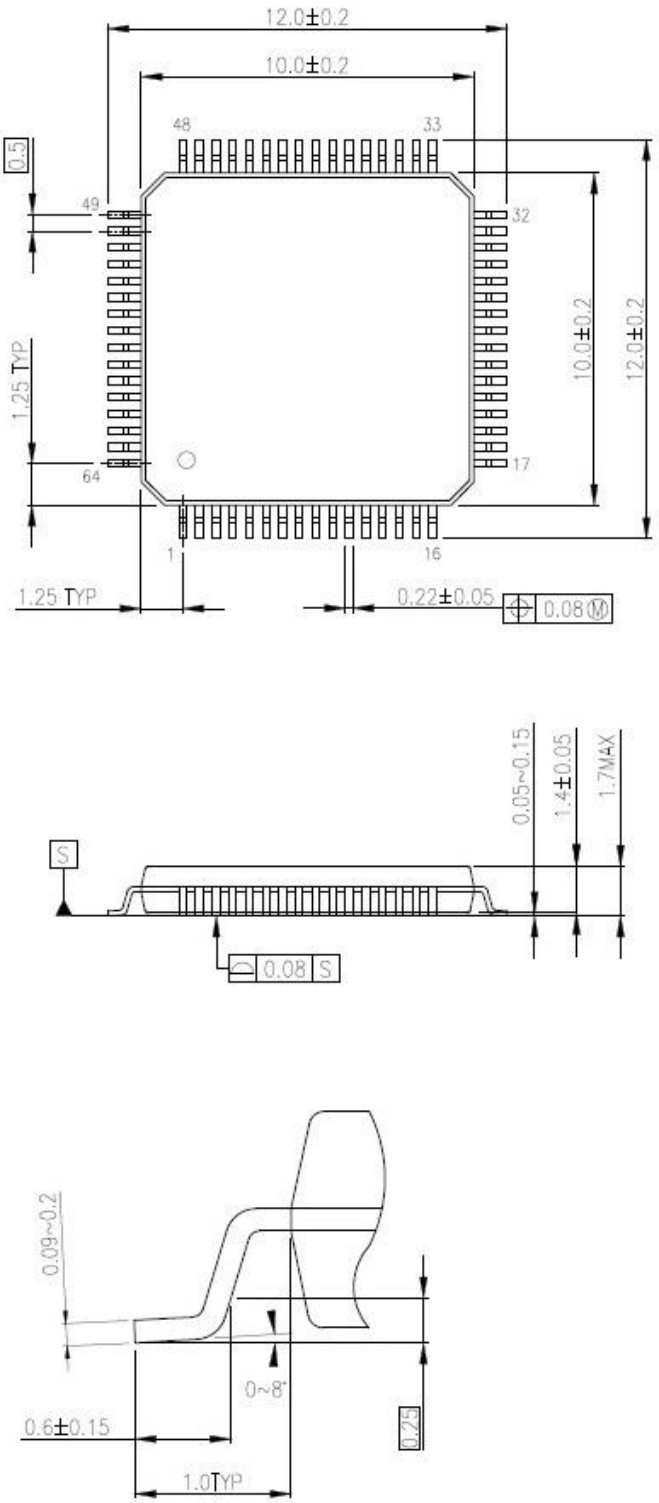

Downloaded from Arrow.com.

8.5. P-LQFP64-1414-0.80-002

Unit: mm

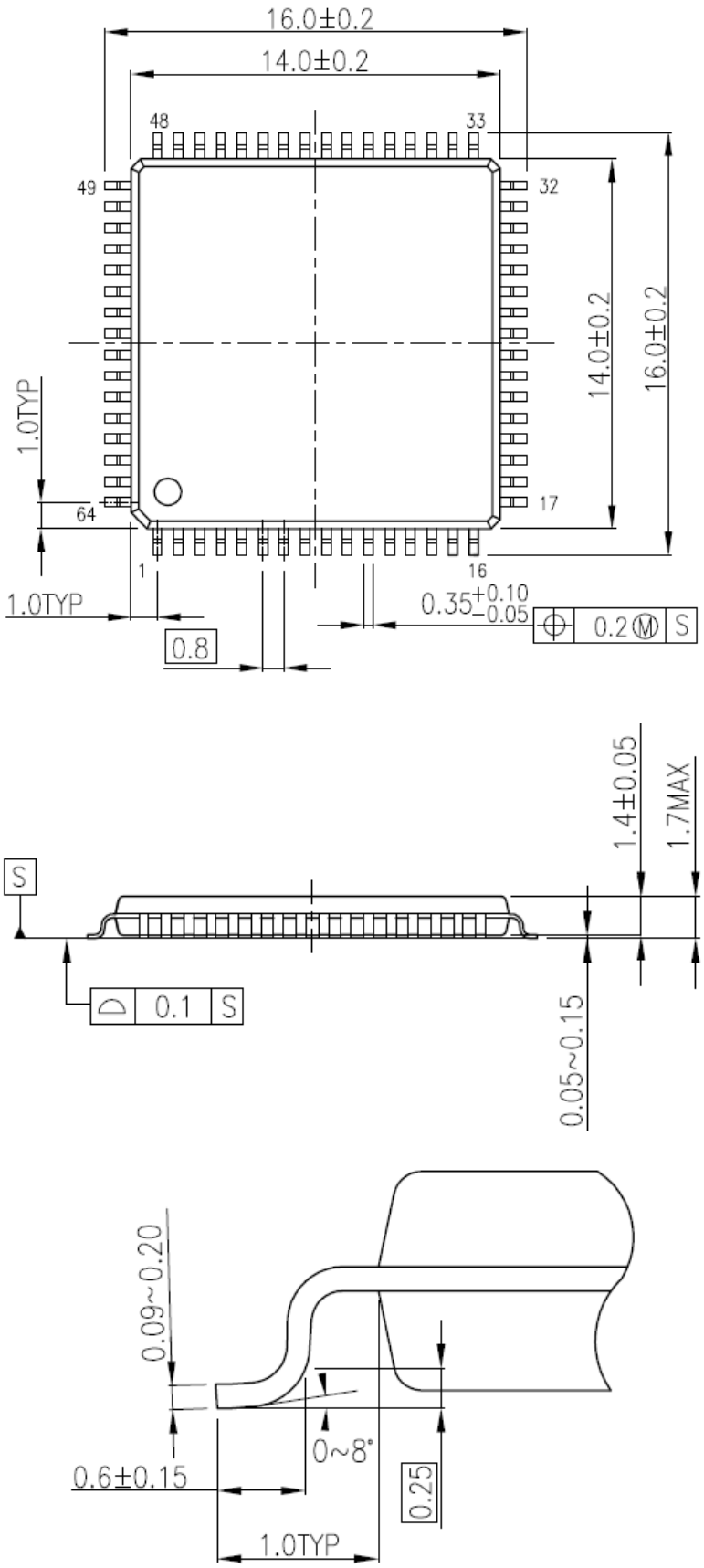

Downloaded from Arrow.com.

9. Precautions

This Page explains general precautions on the use of our MCUs.

Note that if there is a difference between the general precautions and the description in the body of the document, the description in the body of the document has higher priority.

(1) The MCUs' operation at power on

At power on, internal state of the MCUs is unstable. Therefore, state of the pins is undefined until reset operation is completed.
When a reset is performed by an external reset pin, pins of the MCUs that use the reset pin are undefined until reset operation by the external pin is completed.
Also, when a reset is performed by the internal power on reset, pins of the MCUs that use the internal power on reset are undefined until power supply voltage reaches the voltage at which power on reset is valid.

(2) Unused pins

Unused input/output ports of the MCUs are prohibited to use. The pins are high-impedance.
Generally, if MCUs operate while the high-impedance pins left open, electrostatic damage or latch-up may occur in the internal LSI due to induced voltage influenced from external noise.
We recommend that each unused pin should be connected to the power supply pins or GND pins via resistors.

(3) Clock oscillation stability

A reset state must be released after the clock oscillation becomes stable. If the clock is changed to another clock while the program is in progress, wait until the clock is stable.

Downloaded from Arrow.com.

10. Revision History

Table 10.1 Revision History

Revision	Date	Description
1.0	2021-06-08	First release
1.1	2021-06-25	- Features Modified "Start of commercial production". - 4.1.5. Capacitors between power supply pins Modified "Figure 4.1 Capacitors for power supply pins connection circuit". Modified Note1, Note2 and Note3. - 7.1. Absolute Maximum Ratings Modified Note2. Added "Figure 7.1 Notice When a Power is Turned On and Off".
1.2	2022-06-24	- 4.1.4. Power Supply Pins Modified Note4. - 4.1.5. Capacitors between power supply pins Modified Note1, Note3. - Table 7.1 Absolute maximum ratings Modified Note2. - Table 7.2 Thermal resistance of IC package and maximum allowable power table Modified table - 7.6. Characteristics of Internal processing at RESET Modified parameter name from "Power-on rising gradient" to "Power gradient". Added symbol V_{POFF} and specification. - Appendix Modified Part Naming Conventions.
1.3	2023-06-06	- 8.2. P-QFP100-1420-0.65-003 Modified package name and dimensions.
1.4	2023-12-20	- 5.25. Measures for Security Risk Added chapter - 6.4 Clock control Changed the name of input enable signal in a figure - 7.1 Absolute Maximum Ratings Changed table 7.2 - 7.3. DC Electrical Characteristics (2/2) Changed table - 7.11.3. Chip Erase Changed note
1.5	2025-05-16	- 1. Block Diagram Modified figure 1.1. - 7.1. Absolute Maximum Rating Modified table 7.2. - 8.3. P-LQFP80-1212-0.50-005 Modified package name and dimensions.

Downloaded from Arrow.com.

Appendix
List of All pins

Function A to C: These are the functions which become effective without setting up port function registers.
Function 1 to 7: These are the functions which become effective with setting up port function registers.

M4MN QFP100	M4MN LQFP100	M4MM LQFP80	M4ML LQFP64	Pin Name	Function A	Function B	Function C	Function 1	Function 2	Function 3	Function 4	Function 5	Function 6	Function 7	Input/ Output	PU/PD	5V_T	SMT/ CMOS	Under Reset	After Reset
4	1	2	2	PU0		INT12		UT2TXDA	UT2RXD	I2C1SDA	T32A02 INB1		UO2	EI2C1SDA	I/O	PU/PD	YES	SMT	Hi-Z	Hi-Z
5	2	3	3	PU1		INT07a		UT2RXD	UT2TXDA	I2C1SCL	T32A02 INA0	T32A02 INC0	XO2	EI2C1SCL	I/O	PU/PD	YES	SMT	Hi-Z	Hi-Z
6	3	4	4	PU2		INT07b					T32A02 OUTA	T32A02 OUTC	VO2		I/O	PU/PD	N/A	SMT	Hi-Z	Hi-Z
7	4	5	5	PU3		INT08a		UT1RTS_N			T32A02 INB0	ENC2A	YO2		I/O	PU/PD	N/A	SMT	Hi-Z	Hi-Z
8	5	6	6	PU4		INT08b		UT1CTS_N			T32A02 OUTB	T32A02 INC1	WO2		I/O	PU/PD	N/A	SMT	Hi-Z	Hi-Z
9	6	7	7	PU5		INT13		UT1TXDA	UT1RXD		T32A02 INA1	ENC2B	ZO2		I/O	PU/PD	N/A	SMT	Hi-Z	Hi-Z
10	7	8	8	PU6		INT09		UT1RXD	UT1TXDA			ENC2Z	EMG2		I/O	PU/PD	N/A	SMT	Hi-Z	Hi-Z
11	8	-	-	PU7									OVV2	PMD2 DBG	I/O	PU/PD	N/A	SMT	Hi-Z	Hi-Z
12	9	9	-	PN0				UT0TXDA	UT0RXD	NBDDATA2 (Note3)	T32A05 INA0	T32A05 INC0	ENC0A	TRACE DATA2 (Note3)	I/O	PU/PD	N/A	SMT	Hi-Z	Hi-Z
13	10	10	-	PN1		INT16a		UT0RXD	UT0TXDA	NBDDATA3 (Note3)	T32A05 OUTA	T32A05 OUTC	ENC0B	TRACE DATA3 (Note3)	I/O	PU/PD	N/A	SMT	Hi-Z	Hi-Z
14	11	11	-	PN2		INT16b		UT0CTS_N			T32A05 INA1	T32A05 INC1	ENC0Z		I/O	PU/PD	N/A	SMT	Hi-Z	Hi-Z
15	12	-	-	PV0					TSPI1CSIN		T32A01 OUTB				I/O	PU/PD	N/A	SMT	Hi-Z	Hi-Z
16	13	-	-	PV1				UT0RTS_N	TSPI1RXD						I/O	PU/PD	N/A	SMT	Hi-Z	Hi-Z
17	14	12	9	DVSSC											-	-	-	-	-	-
18	15	13	-	PA0				TSPI0CSIN			T32A00 INB0				I/O	PU/PD	N/A	SMT	Hi-Z	Hi-Z
19	16	14	-	PA1		INT15		TSPI0CS1			T32A00 INB1				I/O	PU/PD	N/A	SMT	Hi-Z	Hi-Z
20	17	15	10	PA2		INT00		TSPI0RXD			T32A00 INA0	T32A00 INC0	PMD2 DBG	TRGIN0	I/O	PU/PD	N/A	SMT	Hi-Z	Hi-Z
21	18	16	11	PA3		INT01b		TSPI0TXD	CANATX		T32A00 OUTA	T32A00 OUTC		TRGIN1	I/O	PU/PD	N/A	SMT	Hi-Z	Hi-Z
22	19	17	12	PA4		INT01a		TSPI0SCK	CANARX		T32A00 OUTB			TRGIN2	I/O	PU/PD	N/A	SMT	Hi-Z	Hi-Z
23	20	18	13	PL0	AINA16										I/O	PU/PD	N/A	SMT	Hi-Z	Hi-Z
24	21	19	14	PL1	AINA15										I/O	PU/PD	N/A	SMT	Hi-Z	Hi-Z
25	22	20	15	PL2	AINA17										I/O	PU/PD	N/A	SMT	Hi-Z	Hi-Z
26	23	21	16	PL3	AINA14										I/O	PU/PD	N/A	SMT	Hi-Z	Hi-Z
27	24	22	17	PL4	AINA18										I/O	PU/PD	N/A	SMT	Hi-Z	Hi-Z
28	25	23	18	PL5	AINA13										I/O	PU/PD	N/A	SMT	Hi-Z	Hi-Z
29	26	24	19	PL6	AINA09										I/O	PU/PD	N/A	SMT	Hi-Z	Hi-Z
30	27	25	20	PL7	AINA08										I/O	PU/PD	N/A	SMT	Hi-Z	Hi-Z
31	28	-	-	PM0	AINA07										I/O	PU/PD	N/A	SMT	Hi-Z	Hi-Z
32	29	-	-	PM1	AINA06										I/O	PU/PD	N/A	SMT	Hi-Z	Hi-Z
33	30	-	-	PM2	AINA05										I/O	PU/PD	N/A	SMT	Hi-Z	Hi-Z
34	31	26	21	VREFL											-	-	-	-	-	-
35	32	27	22	AVSS											-	-	-	-	-	-
36	33	28	23	AVDD5											-	-	-	-	-	-
37	34	29	24	VREFH											-	-	-	-	-	-
38	35	30	-	PK4	AINB04										I/O	PU/PD	N/A	SMT	Hi-Z	Hi-Z
39	36	31	-	PK3	AINB03										I/O	PU/PD	N/A	SMT	Hi-Z	Hi-Z
40	37	32	25	PK2	AINB02										I/O	PU/PD	N/A	SMT	Hi-Z	Hi-Z
41	38	33	26	PK1	AINB01										I/O	PU/PD	N/A	SMT	Hi-Z	Hi-Z
42	39	34	27	PK0	AINB00										I/O	PU/PD	N/A	SMT	Hi-Z	Hi-Z
43	40	-	-	PJ5	AINC05										I/O	PU/PD	N/A	SMT	Hi-Z	Hi-Z
44	41	-	-	PJ4	AINC04										I/O	PU/PD	N/A	SMT	Hi-Z	Hi-Z
45	42	35	-	PJ3	AINC03										I/O	PU/PD	N/A	SMT	Hi-Z	Hi-Z
46	43	36	28	PJ2	AINC02										I/O	PU/PD	N/A	SMT	Hi-Z	Hi-Z
47	44	37	29	PJ1	AINC01										I/O	PU/PD	N/A	SMT	Hi-Z	Hi-Z
48	45	38	30	PJ0	AINC00										I/O	PU/PD	N/A	SMT	Hi-Z	Hi-Z
49	46	39	31	PC0				UT0TXDA	UT0RXD	EI2C0SDA	I2C0SDA	T32A02 INA0	T32A02 INC0		I/O	PU/PD	YES	SMT	Hi-Z	Hi-Z
50	47	40	32	PC1		INT02a		UT0RXD	UT0TXDA	EI2C0SCL	I2C0SCL	T32A02 OUTA	T32A02 OUTC		I/O	PU/PD	YES	SMT	Hi-Z	Hi-Z
51	48	41	33	PC2		INT10				TSPI0CS0		T32A03 OUTA	T32A03 OUTC	PMD0 DBG	I/O	PU/PD	N/A	SMT	Hi-Z	Hi-Z
52	49	42	34	PC3		INT03a				TSPI0RXD		T32A03 OUTB		PMD1 DBG	I/O	PU/PD	N/A	SMT	Hi-Z	Hi-Z
53	50	43	-	PC4				UT1TXDA	UT1RXD	TSPI0TXD					I/O	PU/PD	N/A	SMT	Hi-Z	Hi-Z

Downloaded from Arrow.com.

M4MN QFP100	M4MN LQFP100	M4MM LQFP80	M4ML LQFP64	Pin Name	Function A	Function B	Function C	Function 1	Function 2	Function 3	Function 4	Function 5	Function 6	Function 7	Input/ Output	PU/PD	5V_T	SMT/ CMOS	Under Reset	After Reset
54	51	44	-	PC5				UT1RXD	UT1TXDA	TSPI0SCK					I/O	PU/PD	N/A	SMT	Hi-Z	Hi-Z
55	52	-	-	PC6		INT02b				TSPI0CS1		T32A02 INA1	T32A02 INC1		I/O	PU/PD	N/A	SMT	Hi-Z	Hi-Z
56	53	-	-	PC7						TSPI0CSIN		T32A02 INB0			I/O	PU/PD	N/A	SMT	Hi-Z	Hi-Z
57	54	45	35	PB0							UO0				I/O	PU/PD	N/A	SMT	Hi-Z	Hi-Z
58	55	46	36	PB1							XO0				I/O	PU/PD	N/A	SMT	Hi-Z	Hi-Z
59	56	47	37	PB2							VO0				I/O	PU/PD	N/A	SMT	Hi-Z	Hi-Z
60	57	48	38	PB3							YO0				I/O	PU/PD	N/A	SMT	Hi-Z	Hi-Z
61	58	49	39	PB4							WO0				I/O	PU/PD	N/A	SMT	Hi-Z	Hi-Z
62	59	50	40	PB5							ZO0				I/O	PU/PD	N/A	SMT	Hi-Z	Hi-Z
63	60	51	41	PB6							EMG0				I/O	PU/PD	N/A	SMT	Hi-Z	Hi-Z
64	61	-	-	PB7							OVV0	PMD0 DBG			I/O	PU/PD	N/A	SMT	Hi-Z	Hi-Z
65	62	52	42	DVSSA											-	-	-	-	-	-
66	63	53	43	DVDD5A											-	-	-	-	-	-
67	64	-	-	PD0		INT17b					T32A02 INB1				I/O	PU/PD	N/A	SMT	Hi-Z	Hi-Z
68	65	-	-	PD1		INT17a					T32A02 OUTB				I/O	PU/PD	N/A	SMT	Hi-Z	Hi-Z
69	66	-	-	PD2		INT03b		UT0CTS_N			T32A03 INA0	T32A03 INC0			I/O	PU/PD	N/A	SMT	Hi-Z	Hi-Z
70	67	-	-	PD3				UT0RTS_N	I2C1SDA	EI2C1SDA	T32A03 INA1	T32A03 INC1	ENC2A		I/O	PU/PD	YES	SMT	Hi-Z	Hi-Z
71	68	-	-	PD4		INT18b			I2C1SCL	EI2C1SCL	T32A03 INB0		ENC2B		I/O	PU/PD	YES	SMT	Hi-Z	Hi-Z
72	69	-	-	PD5		INT18a					T32A03 INB1		ENC2Z		I/O	PU/PD	N/A	SMT	Hi-Z	Hi-Z
73	70	54	-	PG0							T32A04 INA0	T32A04 INC0			I/O	PU/PD	N/A	SMT	Hi-Z	Hi-Z
74	71	55	-	PG1				TSPI1CS1			T32A04 INA1	T32A04 INC1			I/O	PU/PD	N/A	SMT	Hi-Z	Hi-Z
75	72	56	44	PG2	BOOT_N			TSPI1CS0			T32A04 OUTA	T32A04 OUTC			Output	PU/PD	N/A	SMT	Hi-Z (Note1)	Hi-Z
76	73	57	45	PG3		INT21		TSPI1CSIN			T32A04 OUTB				I/O	PU/PD	N/A	SMT	Hi-Z	Hi-Z
77	74	58	46	PG4				TSPI1RXD			T32A04 INB0				I/O	PU/PD	N/A	SMT	Hi-Z	Hi-Z
78	75	59	47	PG5				TSPI1TXD			T32A04 INB1				I/O	PU/PD	N/A	SMT	Hi-Z	Hi-Z
79	76	60	48	PG6				TSPI1SCK							I/O	PU/PD	N/A	SMT	Hi-Z	Hi-Z
80	77	61	49	PE0				CANATX					UO1		I/O	PU/PD	N/A	SMT	Hi-Z	Hi-Z
81	78	62	50	PE1		INT04b		CANARX			T32A03 INA0	T32A03 INC0	XO1		I/O	PU/PD	N/A	SMT	Hi-Z	Hi-Z
82	79	63	51	PE2							T32A03 OUTA	T32A03 OUTC	VO1		I/O	PU/PD	N/A	SMT	Hi-Z	Hi-Z
83	80	64	52	PE3		INT04a					T32A03 INA1	T32A03 INC1	YO1		I/O	PU/PD	N/A	SMT	Hi-Z	Hi-Z
84	81	65	53	PE4		INT11a					T32A03 INB0		WO1		I/O	PU/PD	N/A	SMT	Hi-Z	Hi-Z
85	82	66	54	PE5		INT05a	INT11b				T32A03 INB1		ZO1		I/O	PU/PD	N/A	SMT	Hi-Z	Hi-Z
86	83	67	55	PE6		INT05b					T32A03 OUTB		EMG1		I/O	PU/PD	N/A	SMT	Hi-Z	Hi-Z
87	84	-	-	PE7									OVV1	PMD1 DBG	I/O	PU/PD	N/A	SMT	Hi-Z	Hi-Z
88	85	68	56	DVDD5B											-	-	-	-	-	-
89	86	69	57	REGOUT2											-	-	-	-	-	-
90	87	70	58	REGOUT1											-	-	-	-	-	-
91	88	71	59	DVSSB											-	-	-	-	-	-
92	89	72	60	MODE											-	PD	-	SMT	-	-
93	90	73	61	PH0	X1	EHCLKIN									Input	PD	N/A	SMT	Hi-Z	Hi-Z
94	91	74	62	PH1	X2										Input	PD	N/A	SMT	Hi-Z	Hi-Z
95	92	75	63	RESET_N											-	PU	-	SMT	-	-
96	93	76	-	PF7				UT3RXD	UT3TXDA	NBDDATA1 (Note3)	T32A01 INB1			TRACE DATA1 (Note3)	I/O	PU/PD	N/A	SMT	Hi-Z	Hi-Z
97	94	77	-	PF6				UT3TXDA	UT3RXD	NBDDATA0 (Note3)	T32A01 INB0			TRACE DATA0 (Note3)	I/O	PU/PD	N/A	SMT	Hi-Z	Hi-Z
98	95	-	-	PF5		INT14b				NBDCLK	T32A01 INA1	T32A01 INC1	ENC1Z	TRACE CLK	I/O	PU/PD	N/A	SMT	Hi-Z	Hi-Z
99	96	78	-	PF4		INT14a		UT3RXD	UT3TXDA	NBDSYNC (Note3)	T32A01 OUTA	T32A01 OUTC	ENC1B	TRST_N (Note3)	I/O	PU/PD	N/A	SMT	PU (Note2)	PU (Note2)
100	97	79	-	PF3				UT3TXDA	UT3RXD		T32A01 INA0	T32A01 INC0	ENC1A	TDI (Note3)	I/O	PU/PD	N/A	SMT	PU (Note2)	PU (Note2)
1	98	-	-	PF2		INT06b					T32A05 INA1	T32A05 INC1		TDO/ SWV	I/O	PU/PD	N/A	SMT	Hi-Z	Hi-Z
2	99	80	64	PF1		INT06a		UT2RXD	UT2TXDA		T32A05 OUTA	T32A05 OUTC		TCK/ SWCLK (Note3) (Note4)	I/O	PU/PD	N/A	SMT	PD (Note2)	PD (Note2)
3	100	1	1	PF0				UT2TXDA	UT2RXD		T32A05 INA0	T32A05 INC0		TMS/ SWDIO (Note3) (Note4)	I/O	PU/PD	N/A	SMT	PU (Note2)	PU (Note2)

Note1: When RESET_N pin is "Low", built-in pull-up resistor is enabled.

Note2: The Initial value of built-in Pull-up/Pull-down resistor is effective.

Note3: TRST_N/TDI/TCK/TMS/TRACEDATA0/TRACEDATA1/TRACEDATA2/ TRACEDATA3/ NBDDATA0/NBDDATA1/NBDDATA2/NBDDATA3/NBDSYNC are not available in M4MM.

Note4: TCK/TMS are not available in M4ML.

Downloaded from Arrow.com.

Part Naming Conventions

TMP M4 M N F Y x FG

The identification of Toshiba microcontrollers

Core

Symbol	Description
M4	Arm Cortex-M4 with FPU
M3	Arm Cortex-M3
M0	Arm Cortex-M0

Revision

Package

Symbol	Description
QG	Plastic shrink quad outline non-leaded package, dry-packed
UG, DUG, FG, DFG	Plastic quad flat package, dry-packed
MG, DMG	Plastic small outline package, dry-packed
XBG	Plastic ball grid array, dry-packed

ROM Size

Symbol	Size [KB]
M	32
P	48
S	64
U	96
W	128
Y	256
Z	384
D	512
E	768
10	1024
15	1536
20	2048

Product group

Family	Symbol	Main application
TXZ/ TXZ+	H	For general-purpose/consumer electronics equipment
	K	For control of motors/inverter control/industrial equipment (Analog combo)
	M	For control of motors/inverter control/industrial equipment (Analog combo), CAN built-in
	G	For OA/digital equipment/industrial equipment
	N	For industrial network/IoT information management device/Ethernet, USB and CAN built-in
	E	For precision instrument
	L	For control of one motor/inverter control/industrial equipment
	V	For general-purpose/consumer electronics equipment (Entry Series)

ROM type

Symbol	Type
F	Flash

Pin count

Symbol		Pin count	Symbol		Pin count
0	G	32 pins or less	7	P	101 to 128 pins
1	H	33 to 44 pins	8	Q	129 to 144 pins
2	J	45 to 48 pins	9	R	145 to 176 pins
3	K	49 to 52 pins	A	S	177 to 200 pins
4	L	53 to 64 pins	B	T	201 to 224 pins
5	M	65 to 80 pins	C	U	225 to 250 pins
6	N	81 to 100 pins	D	V	251 to 300 pins

Downloaded from Arrow.com.

RESTRICTIONS ON PRODUCT USE

Toshiba Corporation and its subsidiaries and affiliates are collectively referred to as “TOSHIBA”.
Hardware, software and systems described in this document are collectively referred to as “Product”.

- TOSHIBA reserves the right to make changes to the information in this document and related Product without notice.
- This document and any information herein may not be reproduced without prior written permission from TOSHIBA. Even with TOSHIBA's written permission, reproduction is permissible only if reproduction is without alteration/omission.
- Though TOSHIBA works continually to improve Product's quality and reliability, Product can malfunction or fail. Customers are responsible for complying with safety standards and for providing adequate designs and safeguards for their hardware, software and systems which minimize risk and avoid situations in which a malfunction or failure of Product could cause loss of human life, bodily injury or damage to property, including data loss or corruption. Before customers use the Product, create designs including the Product, or incorporate the Product into their own applications, customers must also refer to and comply with (a) the latest versions of all relevant TOSHIBA information, including without limitation, this document, the specifications, the data sheets and application notes for Product and the precautions and conditions set forth in the "TOSHIBA Semiconductor Reliability Handbook" and (b) the instructions for the application with which the Product will be used with or for. Customers are solely responsible for all aspects of their own product design or applications, including but not limited to (a) determining the appropriateness of the use of this Product in such design or applications; (b) evaluating and determining the applicability of any information contained in this document, or in charts, diagrams, programs, algorithms, sample application circuits, or any other referenced documents; and (c) validating all operating parameters for such designs and applications. **TOSHIBA ASSUMES NO LIABILITY FOR CUSTOMERS' PRODUCT DESIGN OR APPLICATIONS.**
- **PRODUCT IS NEITHER INTENDED NOR WARRANTED FOR USE IN EQUIPMENTS OR SYSTEMS THAT REQUIRE EXTRAORDINARILY HIGH LEVELS OF QUALITY AND/OR RELIABILITY, AND/OR A MALFUNCTION OR FAILURE OF WHICH MAY CAUSE LOSS OF HUMAN LIFE, BODILY INJURY, SERIOUS PROPERTY DAMAGE AND/OR SERIOUS PUBLIC IMPACT ("UNINTENDED USE").** Except for specific applications as expressly stated in this document, Unintended Use includes, without limitation, equipment used in nuclear facilities, equipment used in the aerospace industry, Class 3 medical devices, equipment used for automobiles, and military vehicles and munitions. **IF YOU USE PRODUCT FOR UNINTENDED USE, TOSHIBA ASSUMES NO LIABILITY FOR PRODUCT.** For details, please contact your TOSHIBA sales representative or contact us via our website.
- Do not disassemble, analyze, reverse-engineer, alter, modify, translate or copy Product, whether in whole or in part.
- Product shall not be used for or incorporated into any products or systems whose manufacture, use, or sale is prohibited under any applicable laws or regulations.
- The information contained herein is presented only as guidance for Product use. No responsibility is assumed by TOSHIBA for any infringement of patents or any other intellectual property rights of third parties that may result from the use of Product. No license to any intellectual property right is granted by this document, whether express or implied, by estoppel or otherwise.
- **ABSENT A WRITTEN SIGNED AGREEMENT, EXCEPT AS PROVIDED IN THE RELEVANT TERMS AND CONDITIONS OF SALE FOR PRODUCT, AND TO THE MAXIMUM EXTENT ALLOWABLE BY LAW, TOSHIBA (1) ASSUMES NO LIABILITY WHATSOEVER, INCLUDING WITHOUT LIMITATION, INDIRECT, CONSEQUENTIAL, SPECIAL, OR INCIDENTAL DAMAGES OR LOSS, INCLUDING WITHOUT LIMITATION, LOSS OF PROFITS, LOSS OF OPPORTUNITIES, BUSINESS INTERRUPTION AND LOSS OF DATA, AND (2) DISCLAIMS ANY AND ALL EXPRESS OR IMPLIED WARRANTIES AND CONDITIONS RELATED TO SALE, USE OF PRODUCT, OR INFORMATION, INCLUDING WARRANTIES OR CONDITIONS OF MERCHANTABILITY, FITNESS FOR A PARTICULAR PURPOSE, ACCURACY OF INFORMATION, OR NONINFRINGEMENT.**
- Do not use or otherwise make available Product or related software or technology for any military purposes, including without limitation, for the design, development, use, stockpiling or manufacturing of nuclear, chemical, or biological weapons or missile technology products (mass destruction weapons). Product and related software and technology may be controlled under the applicable export laws and regulations including, without limitation, the Japanese Foreign Exchange and Foreign Trade Law and the U.S. Export Administration Regulations. Export and re-export of Product or related software or technology are strictly prohibited except in compliance with all applicable export laws and regulations.
- Please contact your TOSHIBA sales representative for details as to environmental matters such as the RoHS compatibility of Product. Please use Product in compliance with all applicable laws and regulations that regulate the inclusion or use of controlled substances, including without limitation, the EU RoHS Directive. **TOSHIBA ASSUMES NO LIABILITY FOR DAMAGES OR LOSSES OCCURRING AS A RESULT OF NONCOMPLIANCE WITH APPLICABLE LAWS AND REGULATIONS.**

Downloaded from Arrow.com.