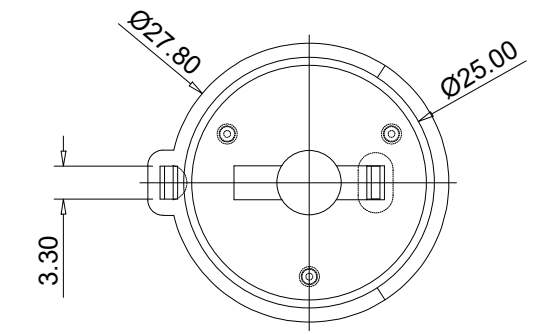

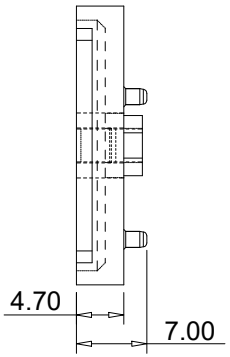

PCB HOLE LAYOUT

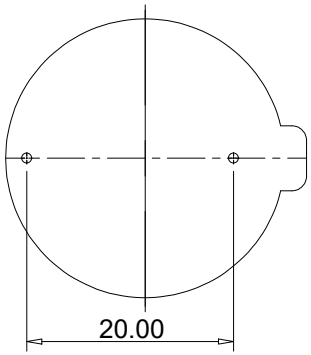

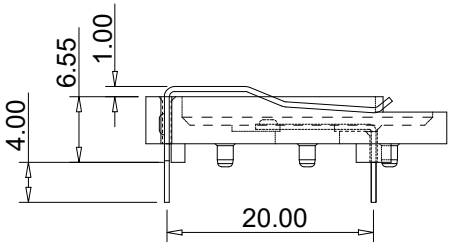

NOTE:

1.MATERIAL
1.1 Housing:PBT+GF,UL94V-0,Black
1.2 Contact:C2680,Au or Tin over Nickel

2.ELECTRIC
2.1 Contact Resistance:30 Milliohms Max.
2.2 Insulation Resistance:1000 Mega Ohms Min.
2.3 Dielectric Voltage:500V AC one Sec Level.

3.Operating Temperature:-55°C To +105°C
4.Packing:Tray
Order Code:A-BAT-CH-CA-EG-xTP1
- G:Gold Flash
- Z:Tin

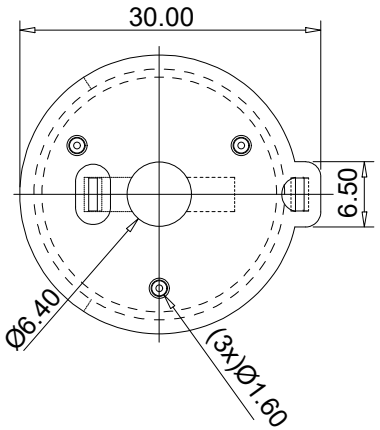

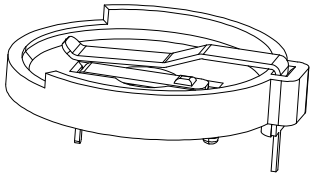

RoHS compliant

unit:mm

Scale	Free
TOLERANCE	
X.	±0.35
.X	±0.25
.XX	±0.20
.XXX	±0.15
DIM	TOL
Angle	TOL

Id.	modification	Date	Name
1	Update dimensions	12.07.2022	Daniel
0	Drawn	12.20.2021	Peter

	Date	Name
Drawn	12.20.2021	Peter
Approved	12.07.2022	Daniel

ASSMANN WSW components

Description: Coin Cell Holders CR2430 Type

ASSMANN WSW-NO.
A-BAT-CH-CA-EG-xTP1

Drawing-No.
ASS 9167 CO

rev01

Customer-No.

SHEET 1 / 1

SV5043

Downloaded from Arrow.com.