PROLINE™ CAPACITORS

AC Capacitors for Motor Run Applications

Proven IEC-252 Class B Compliant

10,000 Hour Reliability Standard

PROLINE Capacitors 1946 West Cook Road, Fort Wayne, Indiana 46818 USA

Phone: (260) 416-5400 **Fax:** (260) 416-5460 **Email:** capacitors@regalbeloit.com

www.prolinecapacitors.com

Downloaded from Arrow.com.

Downloaded from Arrow.com.

Capacitor Application Data Sheet

To ensure correct selection of a capacitor for your application, please provide the information indicated below. This sheet may be duplicated or additional copies may be obtained from RBC.

Of particular importance are the voltages and current waveforms complete with values of voltage and current over a complete cycle.

Send this data to your local RBC Sales Representative or directly to:

PROLINE Capacitors
1946 West Cook Road
Fort Wayne, Indiana 46818 USA

Phone: (260) 416-5400
Fax: (260) 416-5460
Email: capacitors@regalbeloit.com

PRIMARY INFORMATION (Essential)

1. **Application:**_____
2. **Capacitance:**_____**Tolerance:**_____
3. **Peak Voltage:**_____**RMS Voltage**:_____
4. **Peak Current:**_____**RMS Current:**_____
5. **Transient Voltage:**_____**Duration:**_____**Freq. Of Occurrence:**_____
6. **Frequency or Repetition Rate (Hz):**_____**Duty Cycle:**_____
7. **Ambient Temperature:**_____**Max.:**_____**Min.:**_____
8. **Capacitor Charge Time:**_____**Discharge Time:**_____
9. **Required Operating Life (Hours):**_____
10. **Waveforms:**

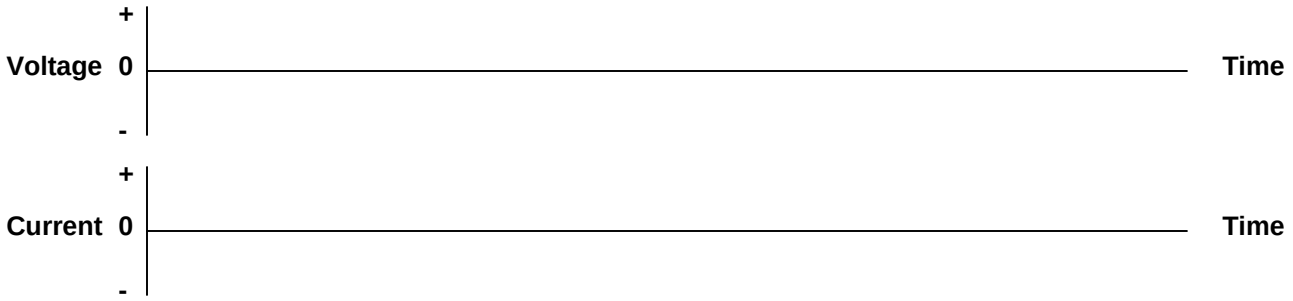

SECONDARY INFORMATION (Provide as Appropriate)

11. **Physical Size Limitations:**_____
12. **Mounting Requirements:**_____
13. **Applicable Specifications:**_____
14. **Type of Cooling Available:**_____
15. **Unusual Atmospheric Conditions:**_____
16. **Other Special Requirements:**_____
17. **Number of Samples Required:**_____ 18. **Potential Usage:**_____

Downloaded from Arrow.com.

Downloaded from Arrow.com.

Table of Contents

Descriptive Information 02

Model Numbering System 03

Product Safety 05

Motor Run Capacitors – PROLINE

- Product Specifications 07
- Single Ratings – 1 Section 08
- Dual Ratings – 2 Sections 10
- Dual Ratings – 2 Concentric Sections 12

Application Data 14

Outline 15

Mounting Hardware 16

Capacitor Label 18

Other Catalogs 19

Downloaded from Arrow.com.

PROLINE Capacitors for Motor Run Applications

Metallized film capacitors are unsurpassed in terms of size, weight, performance, and reliability for AC applications. Regal-Beloit brings over 60 year of capacitor manufacturing experience to the product lines described in this publication. These capacitors represent the best in product design for long-term reliability and safe operation. Regal-Beloit's materials, product, and process development work continue to provide capacitor users with outstanding total value.

The PROLINE Capacitors for Motor Run Applications are widely used with permanent split phase capacitor motors for the more efficient use of electricity. These motors are used in heating and cooling equipment, appliances, business machines, office equipment, and a wide variety of light commercial and industrial equipment.

PROLINE Construction

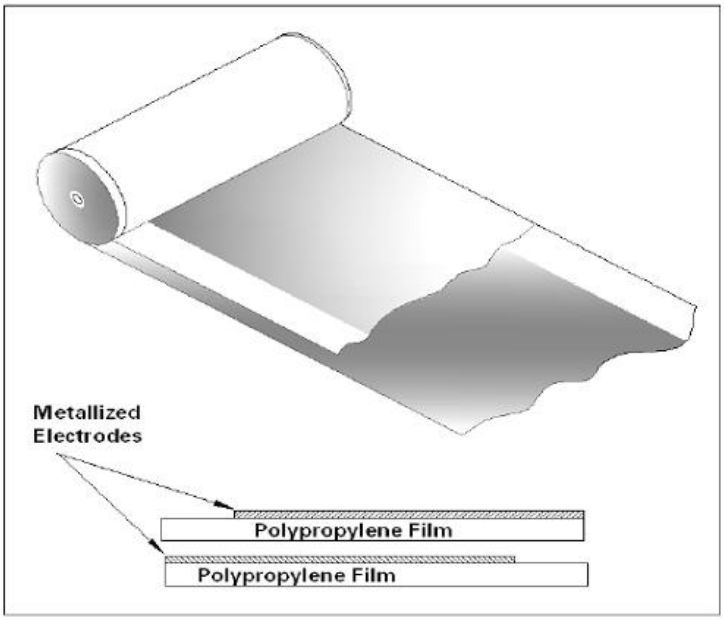

PROLINE Capacitors are manufactured with high-grade metallized polypropylene film. This film is in the range of 5 to 10 microns thick, depending on the application, voltage, and conditions. The metallized electrode is several hundred angstroms thick.

The film is wound into capacitor rolls on high-speed, high-precision machines. The winding is extremely tight so that there is not enough space between the layers for corona (localized partial electrical discharges) to occur. The rolls are sprayed on both ends with metal to make the connection to the extremely thin edges of the metallized electrodes. This process is critical to the quality and performance of the capacitors.

The rolls are assembled in metal cases, Regal-Beloit's proprietary Dielektrol VII liquid is introduced under vacuum, and the capacitors are sealed. They are then subjected to 100% electrical testing for capacitance, dissipation factor, and high potential electrical withstand, both terminal-to-terminal and terminal-to-case.

Downloaded from Arrow.com.

Model Numbering System

P B 075 E 000 A 370 A A

PROLINE Capacitor

Product Line:
B = Motor Run
F = Lighting
C = General Purpose

uF 1 Rating:
07.5 uF

Terminal Type:
B = DQC
C = SQC
D = TQC
E = QQC
P = SQC + DQC
Q = DQC + QQC
W = DQC w/Fork
X = DQC w/Fork + DQC w/Fork + SQC
Y = DQC + QQC + TQC
Z = TQC + QQC + SQC

SQC = Single Quick Connect
DQC = Dual Quick Connect
TQC = Triple Quick Connect
QQC = Quad Quick Connect

uF 2 Rating:
00.0 uF

Case Diameter:
A = 1.25” Oval
B = 1.50” Oval
C = 1.75” Oval
D = 2.00” Oval
P = 1.75” Round
S = 2.00” Round
T = 2.50” Round

Voltage Rating:
370 VAC

Case Height:
A = 1.56”
B = 2.12”
C = 2.88”
D = 3.88”
E = 4.75”
F = 5.75”
G = 5.25”
H = 4.25”

Temperature Rating:
A = 70ºC
B = 90ºC
C = 100ºC

Data from Example Part Nbr Above:

Product Line:	Motor Run
uF 1 Rating:	7.5uF
Terminal Type:	E (QQC)
uF 2 Rating:	0.0uF
Case Diameter:	1.25” Oval
Voltage Rating:	370VAC
Case Height:	1.56”
Temperature Rating:	70ºC

Downloaded from Arrow.com.

Terminal Codes

B

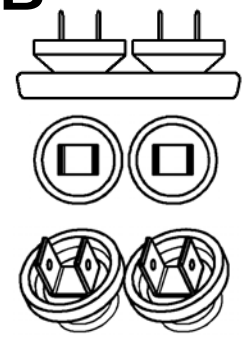

C

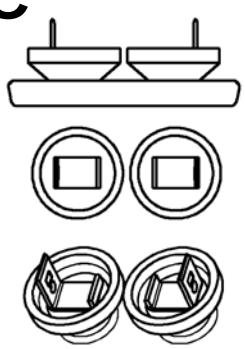

D

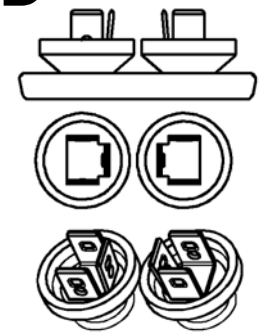

E

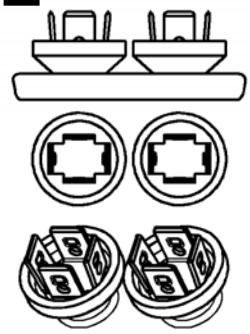

P

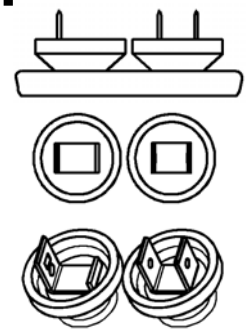

Q

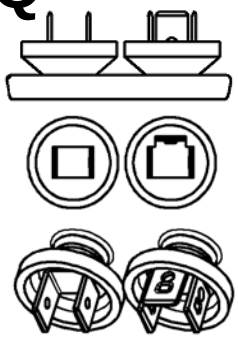

W

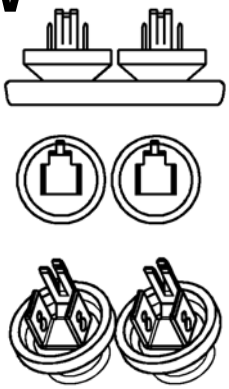

E

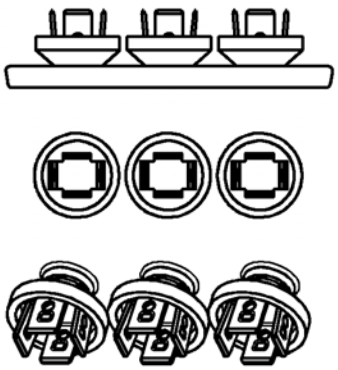

W

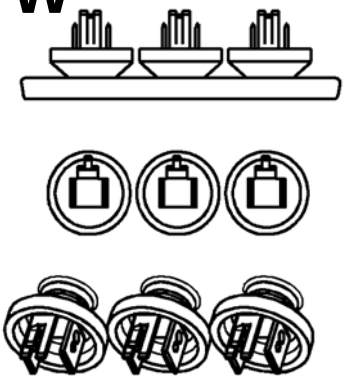

X

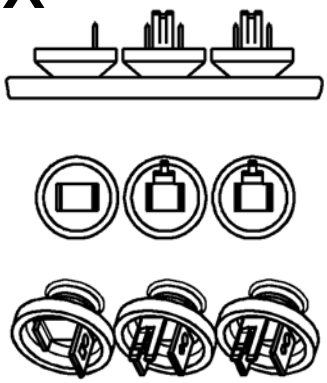

X

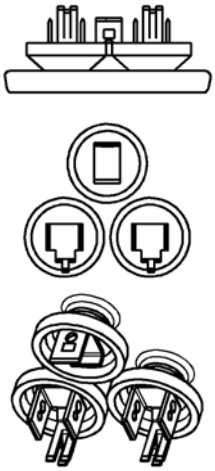

Y

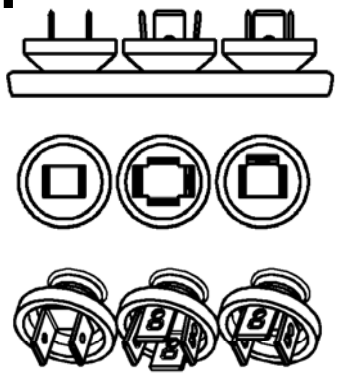

Z

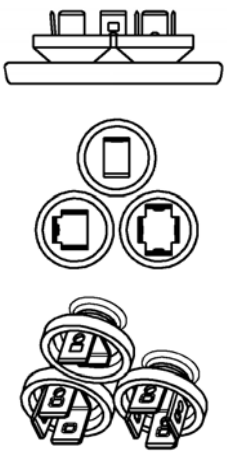

Downloaded from Arrow.com.

Pressure Sensitive Interrupter

All the capacitors listed in this publication contain Regal-Beloit's Pressure Sensitive Interrupter (PSI). This device, developed by GE, is designed to sense the build-up of pressure within the capacitor if a fault occurs and to interrupt the internal electrical connections before the case can rupture.

The PSI carries U.L.* recognition for applications where the specified fault currents are not exceeded. The fault current is the maximum current that is available from the circuit to flow through the capacitor if the capacitor were to become a short circuit with zero impedance. **It is the responsibility of the capacitor user to determine what the available fault current is for a particular application.**

In the Catalog Number listings a four character U.L. Code, Pxxx, is given. This number is part of the listing for Regal-Beloit in U.L. File No. E322597. When applying to U.L. for approvals or recognition of equipment using these capacitors refer to the Pxxx number and not the Catalog Number of the capacitor in question.

Proper operation of the PSI requires that the cover be able to expand without restriction. The following mounting considerations should be noted in mounting the these capacitors.

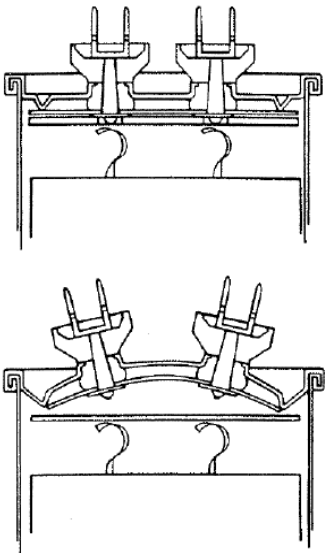

*Underwriter's Laboratory

Downloaded from Arrow.com.

Mounting Considerations

Vertical Clearance

There must be sufficient clearance between the tops of the terminals (and/or the assembled wire connectors) and a plane perpendicular to the capacitor terminals. This clearance must be at least 0.5 inches plus the electrical spacing requirements of the end application.

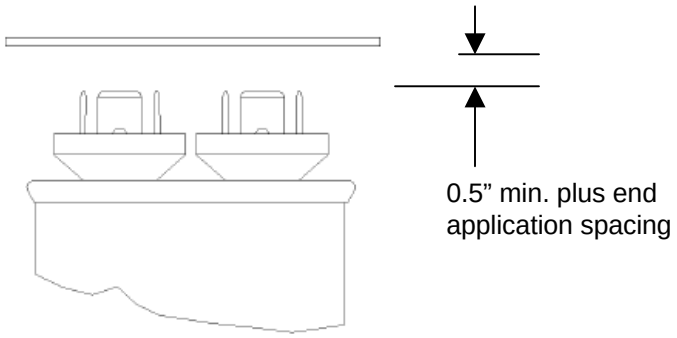

Cut-Out Clearance

In certain instances, capacitors are mounted with the top of the capacitors case resting against the chassis and the terminals protruding through the chassis. Care must be taken to see that the cutout in the chassis is large enough. The following dimensions are recommended.

Case Style	a	b
A	2.00	1.00
B	2.25	1.25
C	2.50	1.62
D	3.25	1.62

Case Style	a
P	1.62
S	1.88
T	2.38

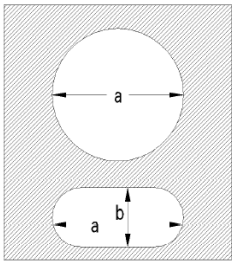

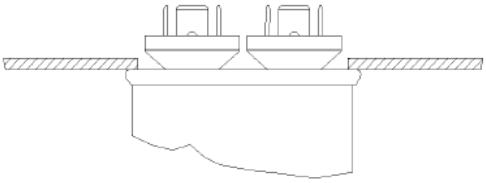

Downloaded from Arrow.com.

Motor Run Capacitors – GEM III

370 & 440 VAC

This capacitor series is **designed specifically for the motor run applications** where the capacitors are used in conjunction with permanent split capacitor type motors. They may be **used on either 50 or 60-Hertz systems** but should not be used at higher frequencies or in applications where higher frequency harmonics are present. If there are **any questions** regarding the correct application of these products, please **contact your RBC sales representative**.

SPECIFICATIONS:

Available Capacitance Range: 2 to 120µF

Capacitance Tolerance: ±6%

Capacitance Variation with Temperature: See Chart M-1 on page 14.

Rated Voltage: See Rating Tables. Rating is the 50/60Hz RMS voltage for a sinusoidal waveform.

Leakage Current: 30µA maximum

Frequency: 50/60 Hz. For higher frequencies use General Purpose AC Capacitor Series.

Operating Temperature: -40ºC to +70ºC

Storage Temperature: -40ºC to +90ºC

Operating Life: 10,000 hours with 94% survival
(In accordance with the IEC-252 Class B Standard)

Dissipation Factor: 0.1% maximum

Case Material/Finish: Unpainted Aluminum case, terne plate steel cover. Contact Regal-Beloit if material/finish to meet UL outdoor standards is required.

Terminations: 'Combo' terminal: 0.250" x 0.031" quick connect blades

Dielectric Fluid: Dielektrol VIII

Internal Protection: UL recognized Pressure Sensitive Interrupter. See Ratings Table for Regal-Beloit's UL Code Number listed under Regal-Beloit's UL File E322597. For UL submittals with these capacitors, use the RBC 'Pxxx' number not the Catalog Number. The corresponding generic UL designation that includes the Available Faults Current (AFC) rating is given below. All these capacitors are capable of interrupting available fault currents of up to 10,000 amperes.

Case Style	RBC Code	Generic UL Code
A	P921	A10000AFC
C	P923	C10000AFC
D	P924	D10000AFC
P	P965	P10000AFC
S	P968	S10000AFC
T	P969	T10000AFC

Downloaded from Arrow.com.

Motor Run Capacitors – GEM III

Single Ratings – 1 Section

Voltage (VAC)	Capacitance (µF)	Catalog Number	Case Style	Base Size (in.)	Can Type	Height C (in.)	UL Code
370	3.0	P B 030 E 000 A 370 A A	A	1.25	Oval	1.56	P921
	4.0	P B 040 E 000 A 370 A A	A	1.25	Oval	1.56	P921
	5.0	P B 050 E 000 A 370 A A	A	1.25	Oval	1.56	P921
	6.0	P B 060 E 000 A 370 B A	A	1.25	Oval	2.12	P921
	7.5	P B 075 E 000 A 370 B A	A	1.25	Oval	2.12	P921
	10.0	P B 100 E 000 A 370 C A	A	1.25	Oval	2.88	P921
	12.5	P B 125 E 000 A 370 C A	A	1.25	Oval	2.88	P921
	15.0	P B 150 E 000 A 370 C A	A	1.25	Oval	2.88	P921
	20.0	P B 200 E 000 P 370 C A	P	1.75	Round	2.88	P965
	25.0	P B 250 E 000 P 370 C A	P	1.75	Round	2.88	P965
	30.0	P B 300 E 000 S 370 C A	S	2.00	Round	2.88	P968
	35.0	P B 350 E 000 S 370 C A	S	2.00	Round	2.88	P968
	40.0	P B 400 E 000 P 370 D A	P	1.75	Round	3.88	P965
	45.0	P B 450 E 000 P 370 E A	P	1.75	Round	4.75	P965
	50.0	P B 500 E 000 P 370 E A	P	1.75	Round	4.75	P965
	55.0	P B 550 E 000 S 370 E A	S	2.00	Round	4.75	P968
	60.0	P B 600 E 000 T 370 D A	T	2.50	Round	3.88	P969
	65.0	P B 650 E 000 T 370 D A	T	2.50	Round	3.88	P969
	70.0	P B 700 E 000 T 370 E A	T	2.50	Round	4.75	P969
	75.0	P B 750 E 000 T 370 E A	T	2.50	Round	4.75	P969
	80.0	P B 800 E 000 T 370 E A	T	2.50	Round	4.75	P969

Case Style P, S, and T

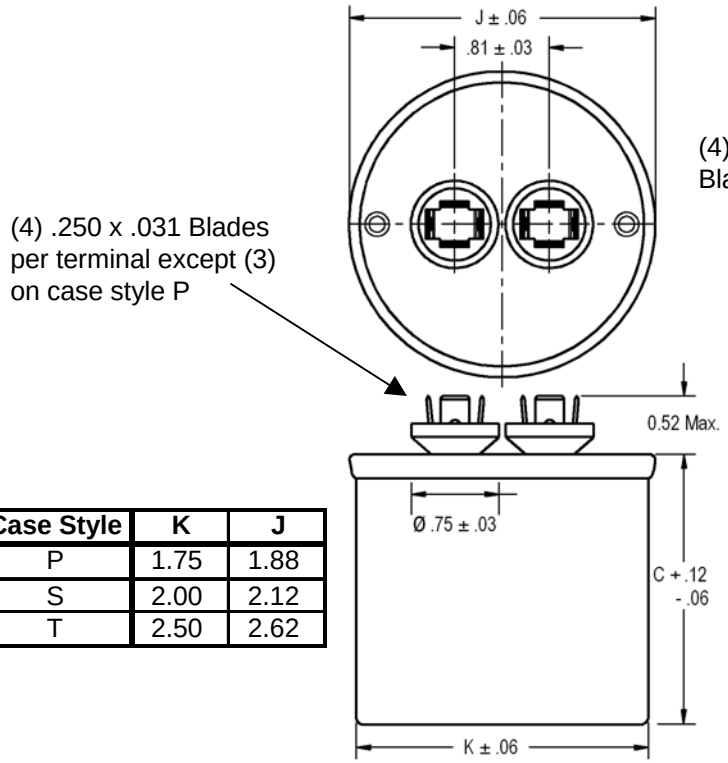

Case Style	K	J
P	1.75	1.88
S	2.00	2.12
T	2.50	2.62

Case Style A

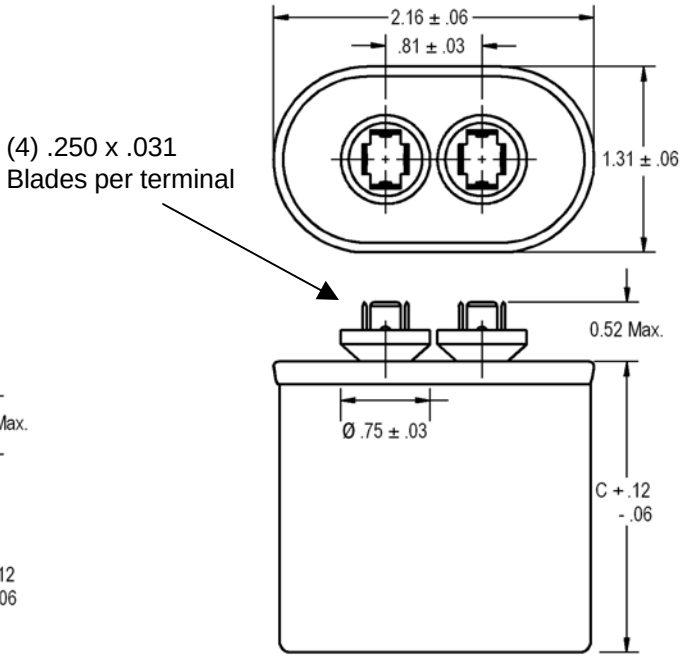

*It is **Regal-Beloit's goal** to serve you with the **most cost effective** and **highest quality capacitor** designs. Standardization to the catalog type shown is a major program at Regal-Beloit. However, Regal-Beloit remains sensitive to your needs and requirements, and **will continue to offer the above ratings (and more) in case configurations to meet your application(s).**

Downloaded from Arrow.com.

Motor Run Capacitors – GEM III

Single Ratings – 1 Section

Voltage (VAC)	Capacitance (µF)	Catalog Number	Case Style	Base Size (in.)	Can Type	Height C (in.)	UL Code
440	3.0	P B 030 E 000 A 440 B A	A	1.25	Oval	2.12	P921
	4.0	P B 040 E 000 A 440 C A	A	1.25	Oval	2.88	P921
	5.0	P B 050 E 000 A 440 B A	A	1.25	Oval	2.12	P921
	6.0	P B 060 E 000 A 440 C A	A	1.25	Oval	2.88	P921
	7.5	P B 075 E 000 A 440 C A	A	1.25	Oval	2.88	P921
	10.0	P B 100 E 000 A 440 C A	A	1.25	Oval	2.88	P921
	12.5	P B 125 E 000 A 440 D A	A	1.25	Oval	3.88	P921
	15.0	P B 150 E 000 A 440 E A	A	1.25	Oval	4.75	P921
	20.0	P B 200 E 000 S 440 C A	S	2.00	Round	2.88	P968
	25.0	P B 250 E 000 P 440 D A	P	1.75	Round	3.88	P965
	30.0	P B 300 E 000 P 440 D A	P	1.75	Round	3.88	P965
	35.0	P B 350 E 000 S 440 D A	S	2.00	Round	3.88	P968
	40.0	P B 400 E 000 P 440 E A	P	1.75	Round	4.75	P965
	45.0	P B 450 E 000 S 440 E A	S	2.00	Round	4.75	P968
	50.0	P B 500 E 000 T 440 D A	T	2.50	Round	3.88	P969
	55.0	P B 550 E 000 T 440 E A	T	2.50	Round	4.75	P969
	60.0	P B 600 E 000 T 440 E A	T	2.50	Round	4.75	P968
	65.0	P B 650 E 000 T 440 E A	T	2.50	Round	4.75	P969
	70.0	P B 700 E 000 T 440 E A	T	2.50	Round	4.75	P969

Case Style P, S, and T

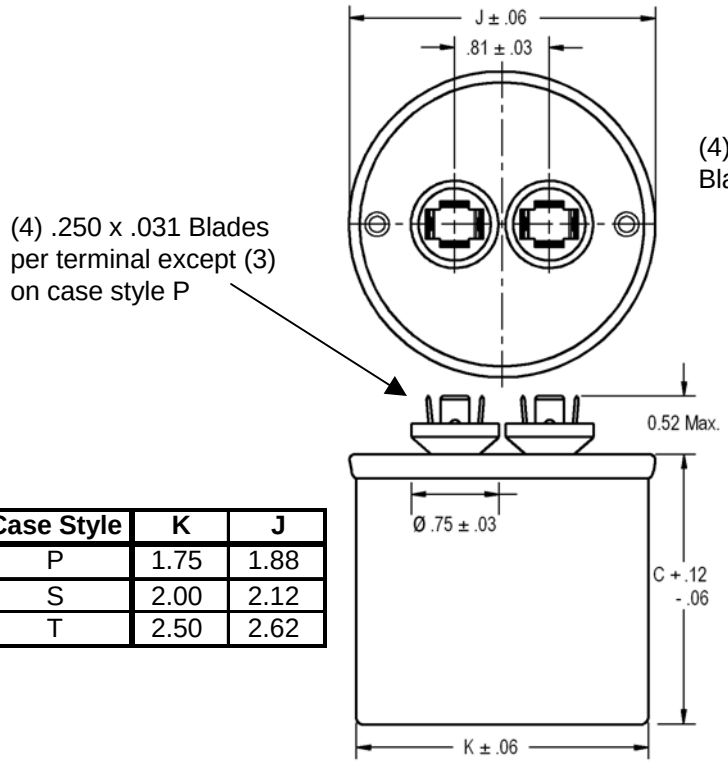

Case Style	K	J
P	1.75	1.88
S	2.00	2.12
T	2.50	2.62

Case Style A

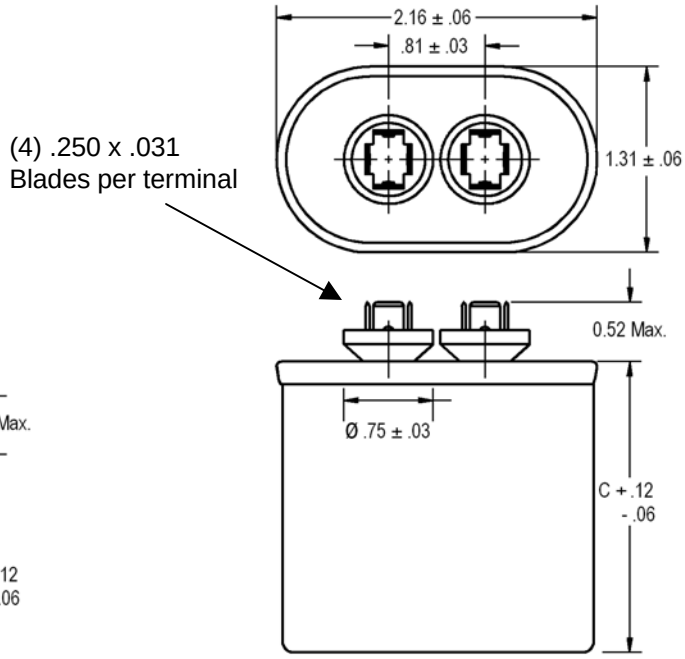

*It is **Regal-Beloit's goal** to serve you with the **most cost effective** and **highest quality capacitor** designs. Standardization to the catalog type shown is a major program at Regal-Beloit. However, Regal-Beloit remains sensitive to your needs and requirements, and **will continue to offer the above ratings (and more) in case configurations to meet your application(s).**

Downloaded from Arrow.com.

Motor Run Capacitors – GEM III

Dual Ratings – 2 Sections

Voltage (VAC)	Capacitance Herm (µF)	Capacitance Fan (µF)	Catalog Number	Case Style	Base Size (in.)	Can Type	Height C (in.)	UL Code
370	10.0	10.0	P B 100 Y 100 C 370 C A	C	1.75	Oval	2.88	P923
	15.0	5.0	P B 150 Y 050 C 370 C A	C	1.75	Oval	2.88	P923
	15.0	7.5	P B 150 Y 075 C 370 C A	C	1.75	Oval	2.88	P923
	15.0	10.0	P B 150 Y 100 C 370 C A	C	1.75	Oval	2.88	P923
	20.0	5.0	P B 200 Y 050 C 370 C A	C	1.75	Oval	2.88	P923
	20.0	7.5	P B 200 Y 075 C 370 C A	C	1.75	Oval	2.88	P923
	20.0	10.0	P B 200 Y 100 C 370 D A	C	1.75	Oval	3.88	P923
	25.0	5.0	P B 250 Y 050 C 370 C A	C	1.75	Oval	2.88	P923
	25.0	7.5	P B 250 Y 075 C 370 C A	C	1.75	Oval	2.88	P923
	25.0	10.0	P B 250 Y 100 C 370 C A	C	1.75	Oval	2.88	P923
	30.0	5.0	P B 300 Y 050 C 370 D A	C	1.75	Oval	3.88	P923
	30.0	7.5	P B 300 Y 075 C 370 D A	C	1.75	Oval	3.88	P923
	30.0	10.0	P B 300 Y 100 C 370 D A	C	1.75	Oval	3.88	P923
	35.0	5.0	P B 350 Y 050 C 370 D A	C	1.75	Oval	3.88	P923
	35.0	7.5	P B 350 Y 075 C 370 D A	C	1.75	Oval	3.88	P923
	35.0	10.0	P B 350 Y 100 C 370 D A	C	1.75	Oval	3.88	P923
	40.0	5.0	P B 400 Y 050 C 370 D A	C	1.75	Oval	3.88	P923
	40.0	7.5	P B 400 Y 075 C 370 D A	C	1.75	Oval	3.88	P923
	40.0	10.0	P B 400 Y 100 C 370 D A	C	1.75	Oval	3.88	P923
	45.0	5.0	P B 450 Y 050 C 370 D A	C	1.75	Oval	3.88	P923
	45.0	7.5	P B 450 Y 075 C 370 D A	C	1.75	Oval	3.88	P923
	45.0	10.0	P B 450 Y 100 C 370 D A	C	1.75	Oval	3.88	P923
	50.0	5.0	P B 500 Y 050 C 370 E A	C	1.75	Oval	4.75	P923
	50.0	7.5	P B 500 Y 075 C 370 E A	C	1.75	Oval	4.75	P923
	50.0	10.0	P B 500 Y 100 D 370 E A	D	2.00	Oval	4.75	P968

Case Style C and D

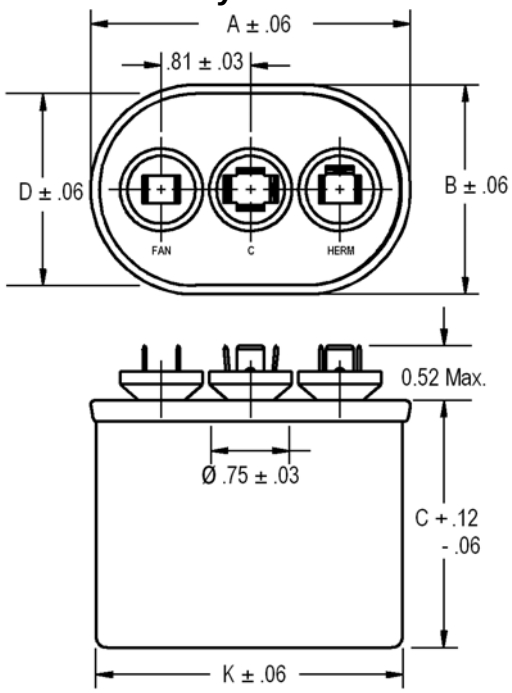

Case Style	A	B	D	K
C	2.91	1.91	1.81	2.81
D	3.66	1.97	1.88	3.56

*It is **Regal-Beloit's goal** to serve you with the **most cost effective** and **highest quality capacitor** designs. Standardization to the catalog type shown is a major program at Regal-Beloit. However, Regal-Beloit remains sensitive to your needs and requirements, and **will continue to offer the above ratings (and more) in case configurations to meet your application(s).**

Downloaded from Arrow.com.

Motor Run Capacitors – GEM III

Dual Ratings – 2 Sections

Voltage (VAC)	Capacitance Herm (µF)	Capacitance Fan (µF)	Catalog Number	Case Style	Base Size (in.)	Can Type	Height C (in.)	UL Code
440	10.0	10.0	P B 100 Y 100 C 440 C A	C	1.75	Oval	2.88	P923
	15.0	5.0	P B 150 Y 050 C 440 C A	C	1.75	Oval	2.88	P923
	15.0	7.5	P B 150 Y 075 C 440 C A	C	1.75	Oval	2.88	P923
	15.0	10.0	P B 150 Y 100 C 440 D A	C	1.75	Oval	3.88	P923
	20.0	5.0	P B 200 Y 050 C 440 C A	C	1.75	Oval	2.88	P923
	20.0	7.5	P B 200 Y 075 C 440 D A	C	1.75	Oval	3.88	P923
	20.0	10.0	P B 200 Y 100 C 440 D A	C	1.75	Oval	3.88	P923
	25.0	5.0	P B 250 Y 050 C 440 D A	C	1.75	Oval	3.88	P923
	25.0	7.5	P B 250 Y 075 C 440 D A	C	1.75	Oval	3.88	P923
	25.0	10.0	P B 250 Y 100 C 440 E A	C	1.75	Oval	4.75	P923
	30.0	5.0	P B 300 Y 050 C 440 D A	C	1.75	Oval	3.88	P923
	30.0	7.5	P B 300 Y 075 C 440 D A	C	1.75	Oval	3.88	P923
	30.0	10.0	P B 300 Y 100 C 440 E A	C	1.75	Oval	4.75	P923
	35.0	5.0	P B 350 Y 050 C 440 E A	C	1.75	Oval	4.75	P923
	35.0	7.5	P B 350 Y 075 C 440 E A	C	1.75	Oval	4.75	P923
	35.0	10.0	P B 350 Y 100 C 440 E A	C	1.75	Oval	4.75	P923
	40.0	5.0	P B 400 Y 050 C 440 E A	C	1.75	Oval	4.75	P923
	40.0	7.5	P B 400 Y 075 C 440 E A	C	1.75	Oval	4.75	P923
	40.0	10.0	P B 400 Y 100 D 440 E A	D	2.00	Oval	4.75	P968
	45.0	5.0	P B 450 Y 050 C 440 E A	C	1.75	Oval	4.75	P923
	45.0	7.5	P B 450 Y 075 D 440 E A	D	2.00	Oval	4.75	P968
	45.0	10.0	P B 450 Y 100 C 440 E A	C	1.75	Oval	4.75	P923
	50.0	5.0	P B 500 Y 050 D 440 F A	D	2.00	Oval	5.75	P968
	50.0	7.5	P B 500 Y 075 D 440 F A	D	2.00	Oval	5.75	P968
	50.0	10.0	P B 500 Y 100 D 440 F A	D	2.00	Oval	5.75	P968

Case Style C and D

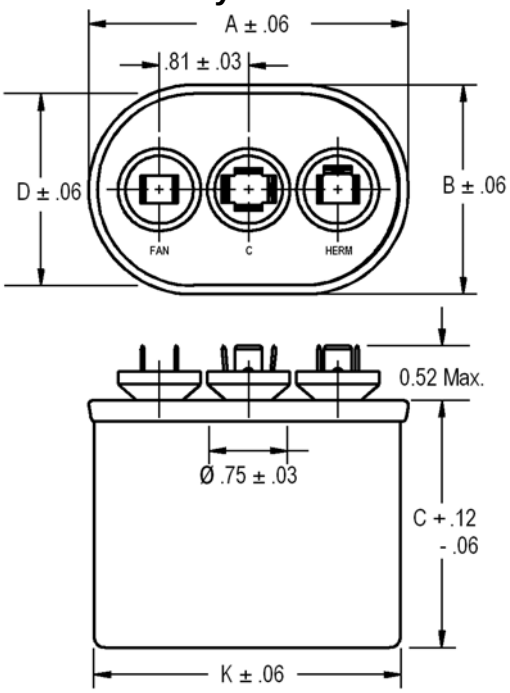

Case Style	A	B	D	K
C	2.91	1.91	1.81	2.81
D	3.66	1.97	1.88	3.56

*It is **Regal-Beloit's goal** to serve you with the **most cost effective** and **highest quality capacitor** designs. Standardization to the catalog type shown is a major program at Regal-Beloit. However, Regal-Beloit remains sensitive to your needs and requirements, and **will continue to offer the above ratings (and more) in case configurations to meet your application(s).**

Downloaded from Arrow.com.

Motor Run Capacitors – GEM III

Dual Ratings – 2 Concentric Sections

Voltage (VAC)	Capacitance Herm (µF)	Capacitance Fan (µF)	Catalog Number	Case Style	Base Size (in.)	Can Type	Height C (in.)	UL Code
370	15.0	5.0	P B 150 Z 050 S 370 C A	S	2.00	Round	2.88	P968
	15.0	7.5	P B 150 Z 075 S 370 C A	S	2.00	Round	2.88	P968
	15.0	10.0	P B 150 Z 100 S 370 C A	S	2.00	Round	2.88	P968
	20.0	5.0	P B 200 Z 050 S 370 C A	S	2.00	Round	2.88	P968
	20.0	7.5	P B 200 Z 075 S 370 C A	S	2.00	Round	2.88	P968
	20.0	10.0	P B 200 Z 100 S 370 C A	S	2.00	Round	2.88	P968
	25.0	5.0	P B 250 Z 050 S 370 C A	S	2.00	Round	2.88	P968
	25.0	7.5	P B 250 Z 075 S 370 C A	S	2.00	Round	2.88	P968
	25.0	10.0	P B 250 Z 100 S 370 D A	S	2.00	Round	3.88	P968
	30.0	5.0	P B 300 Z 050 S 370 C A	S	2.00	Round	2.88	P968
	30.0	7.5	P B 300 Z 075 S 370 D A	S	2.00	Round	2.88	P968
	30.0	10.0	P B 300 Z 100 S 370 D A	S	2.00	Round	3.88	P968
	35.0	5.0	P B 350 Z 050 S 370 D A	S	2.00	Round	3.88	P968
	35.0	7.5	P B 350 Z 075 S 370 D A	S	2.00	Round	3.88	P968
	35.0	10.0	P B 350 Z 100 S 370 D A	S	2.00	Round	3.88	P968
	40.0	5.0	P B 400 Z 050 S 370 D A	S	2.00	Round	3.88	P968
	40.0	7.5	P B 400 Z 075 S 370 D A	S	2.00	Round	3.88	P968
	40.0	10.0	P B 400 Z 100 S 370 D A	S	2.00	Round	3.88	P968
	45.0	5.0	P B 450 Z 050 S 370 D A	S	2.00	Round	3.88	P968
	45.0	7.5	P B 450 Z 075 S 370 E A	S	2.00	Round	4.75	P968
	45.0	10.0	P B 450 Z 100 S 370 E A	S	2.00	Round	4.75	P968
	50.0	5.0	P B 500 Z 050 T 370 E A	T	2.50	Round	4.75	P969
	50.0	7.5	P B 500 Z 075 S 370 E A	S	2.00	Round	4.75	P968
	50.0	10.0	P B 500 Z 100 S 370 E A	S	2.00	Round	4.75	P968
	55.0	5.0	P B 550 Z 050 T 370 D A	T	2.50	Round	3.88	P969
	55.0	7.5	P B 550 Z 075 T 370 D A	T	2.50	Round	3.88	P969
	55.0	10.0	P B 550 Z 100 T 370 D A	T	2.50	Round	3.88	P969
	60.0	5.0	P B 600 Z 050 T 370 E A	T	2.50	Round	4.75	P969
	60.0	7.5	P B 600 Z 075 T 370 E A	T	2.50	Round	4.75	P969
	60.0	10.0	P B 600 Z 100 T 370 E A	T	2.50	Round	4.75	P969
	70.0	5.0	P B 700 Z 050 T 370 E A	T	2.50	Round	4.75	P969
	70.0	7.5	P B 700 Z 075 T 370 E A	T	2.50	Round	4.75	P969
	70.0	10.0	P B 700 Z 100 T 370 E A	T	2.50	Round	4.75	P969
	80.0	5.0	P B 800 Z 050 T 370 E A	T	2.50	Round	4.75	P969
	80.0	7.5	P B 800 Z 075 T 370 E A	T	2.50	Round	4.75	P969
	80.0	10.0	P B 800 Z 100 T 370 E A	T	2.50	Round	4.75	P969

Case Style S and T

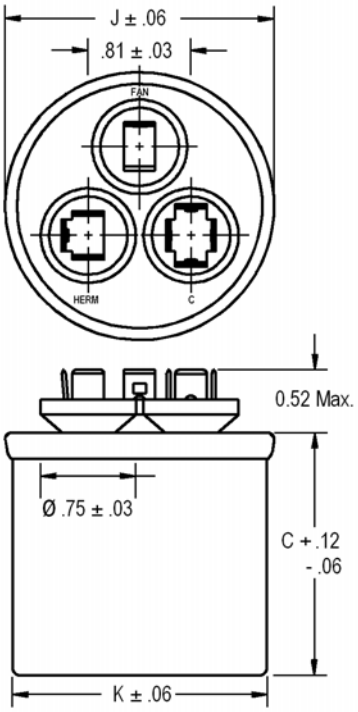

Case Style	K	J
S	2.00	2.12
T	2.50	2.62

*It is **Regal-Beloit's goal** to serve you with the **most cost effective** and **highest quality capacitor** designs. Standardization to the catalog type shown is a major program at Regal-Beloit. However, Regal-Beloit remains sensitive to your needs and requirements, and **will continue to offer the above ratings (and more) in case configurations to meet your application(s).**

Downloaded from Arrow.com.

Motor Run Capacitors – GEM III

Dual Ratings – 2 Concentric Sections

Case Style S and T

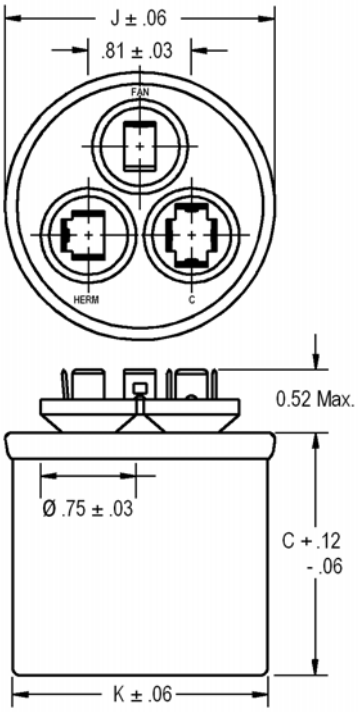

Voltage (VAC)	Capacitance Herm (µF)	Capacitance Fan (µF)	Catalog Number	Case Style	Base Size (in.)	Can Type	Height C (in.)	UL Code
440	15.0	5.0	P B 150 Z 050 S 440 C A	S	2.00	Round	2.88	P968
	15.0	7.5	P B 150 Z 075 S 440 D A	S	2.00	Round	3.88	P968
	15.0	10.0	P B 150 Z 100 S 440 D A	S	2.00	Round	3.88	P968
	20.0	5.0	P B 200 Z 050 S 440 D A	S	2.00	Round	3.88	P968
	20.0	7.5	P B 200 Z 075 S 440 D A	S	2.00	Round	3.88	P968
	20.0	10.0	P B 200 Z 100 S 440 D A	S	2.00	Round	3.88	P968
	25.0	5.0	P B 250 Z 050 S 440 D A	S	2.00	Round	3.88	P968
	25.0	7.5	P B 250 Z 075 S 440 D A	S	2.00	Round	3.88	P968
	25.0	10.0	P B 250 Z 100 S 440 D A	S	2.00	Round	3.88	P968
	30.0	5.0	P B 300 Z 050 S 440 D A	S	2.00	Round	3.88	P968
	30.0	7.5	P B 300 Z 075 S 440 D A	S	2.00	Round	3.88	P968
	30.0	10.0	P B 300 Z 100 S 440 D A	S	2.00	Round	3.88	P968
	35.0	5.0	P B 350 Z 050 S 440 E A	S	2.00	Round	4.75	P968
	35.0	7.5	P B 350 Z 075 S 440 E A	S	2.00	Round	4.75	P968
	35.0	10.0	P B 350 Z 100 T 440 D A	T	2.50	Round	3.88	P969
	40.0	5.0	P B 400 Z 050 T 440 C A	T	2.50	Round	2.88	P969
	40.0	7.5	P B 400 Z 075 S 440 E A	S	2.00	Round	4.75	P968
	40.0	10.0	P B 400 Z 100 S 440 E A	S	2.00	Round	4.75	P968
	45.0	5.0	P B 450 Z 050 T 440 D A	T	2.50	Round	3.88	P969
	45.0	7.5	P B 450 Z 075 T 440 D A	T	2.50	Round	3.88	P969
	45.0	10.0	P B 450 Z 100 T 440 D A	T	2.50	Round	3.88	P969
	50.0	5.0	P B 500 Z 050 T 440 D A	T	2.50	Round	3.88	P969
	50.0	7.5	P B 500 Z 075 T 440 E A	T	2.50	Round	4.75	P969
	50.0	10.0	P B 500 Z 100 T 440 E A	T	2.50	Round	4.75	P969
	55.0	5.0	P B 550 Z 050 T 440 E A	T	2.50	Round	4.75	P969
	55.0	7.5	P B 550 Z 075 T 440 E A	T	2.50	Round	4.75	P969
	55.0	10.0	P B 550 Z 100 T 440 E A	T	2.50	Round	4.75	P969
	60.0	5.0	P B 600 Z 050 T 440 E A	T	2.50	Round	4.75	P969
	60.0	7.5	P B 600 Z 075 T 440 E A	T	2.50	Round	4.75	P969
	60.0	10.0	P B 600 Z 100 T 440 E A	T	2.50	Round	4.75	P969
	70.0	5.0	P B 700 Z 050 T 440 E A	T	2.50	Round	4.75	P969
	70.0	7.5	P B 700 Z 075 T 440 E A	T	2.50	Round	4.75	P969
	70.0	10.0	P B 700 Z 100 T 440 E A	T	2.50	Round	4.75	P969
	80.0	5.0	P B 800 Z 050 T 440 E A	T	2.50	Round	4.75	P969
	80.0	7.5	P B 800 Z 075 T 440 E A	T	2.50	Round	4.75	P969
	80.0	10.0	P B 800 Z 100 T 440 E A	T	2.50	Round	4.75	P969

Case Style	K	J
S	2.00	2.12
T	2.50	2.62

*It is **Regal-Beloit's goal** to serve you with the **most cost effective** and **highest quality capacitor** designs. Standardization to the catalog type shown is a major program at Regal-Beloit. However, Regal-Beloit remains sensitive to your needs and requirements, and **will continue to offer the above ratings (and more) in case configurations to meet your application(s).**

Downloaded from Arrow.com.

% CAPACITANCE vs. TEMPERATURE

CHART M-1

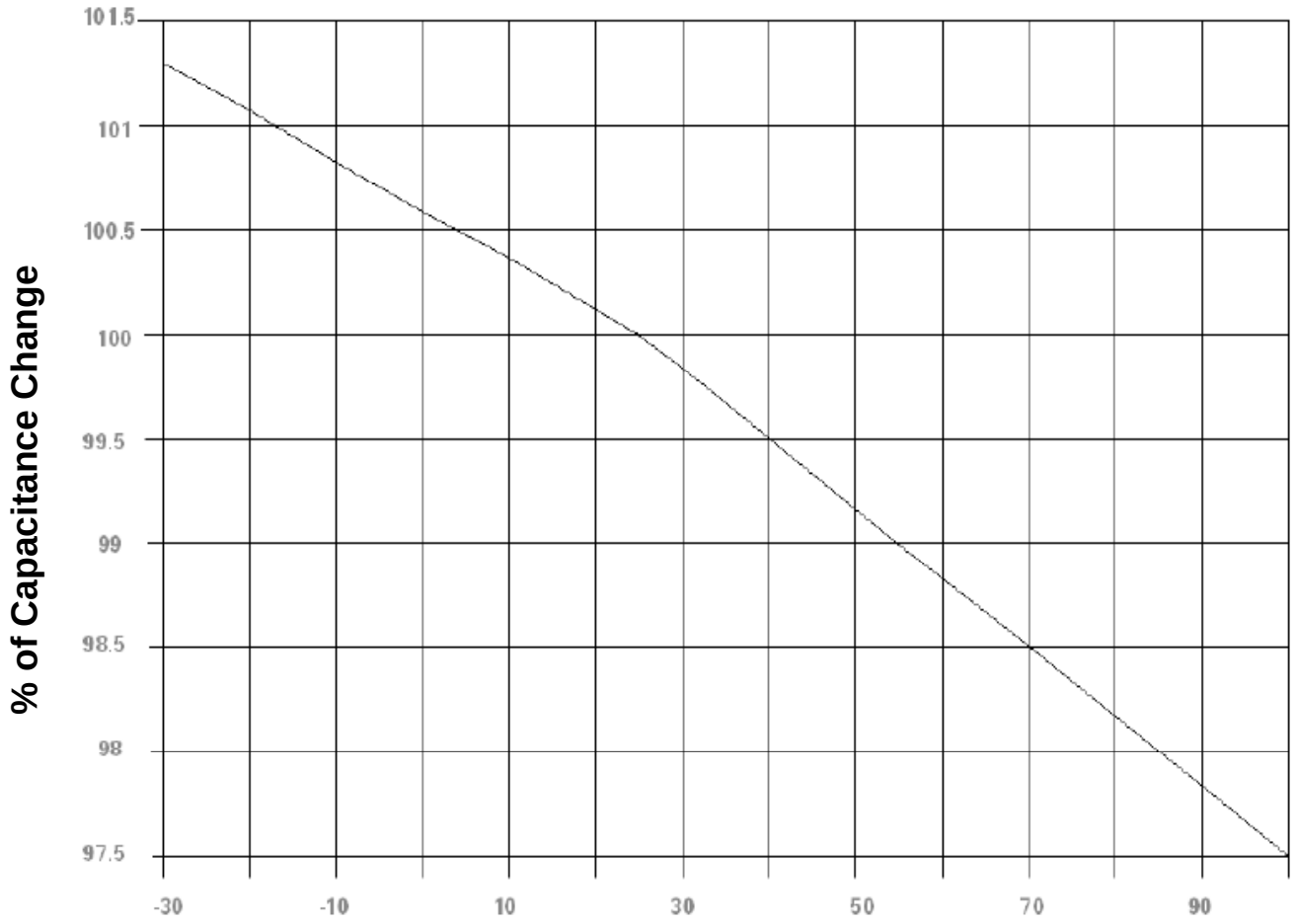

Downloaded from Arrow.com.

Round Case Style (P, S, T)

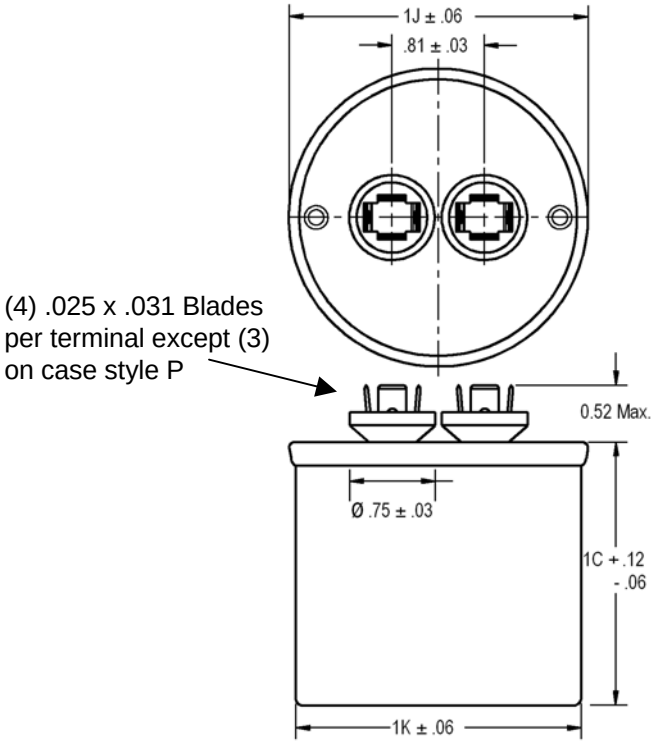

Oval Case Style (A, B, C, D)

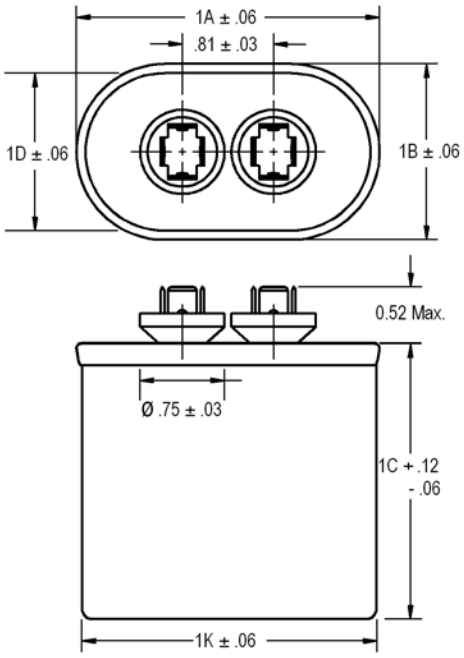

Dual Oval Case Style (C and D)

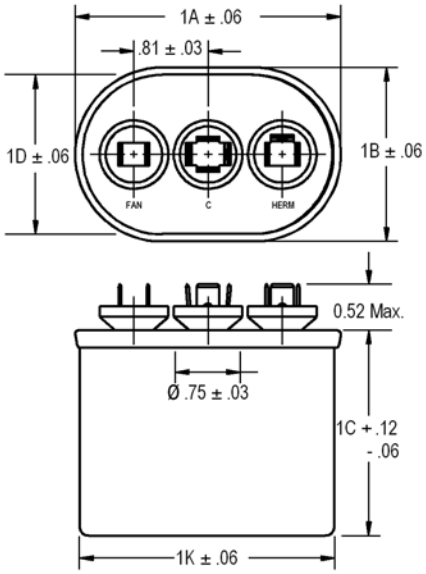

Oval Case Style		Dimensions			
		1A	1B	1D	1K
A	Oval	2.16	1.31	1.21	2.06
B	Oval	2.69	1.56	1.47	2.58
C	Oval	2.91	1.91	1.81	2.81
D	Oval	3.66	1.97	1.88	3.56
C	Dual Oval	2.91	1.91	1.81	2.81
D	Dual Oval	3.66	1.97	1.88	3.56

Round Case Style		Dimensions			
		1K			1J
P	Round	1.75	-----	-----	1.88
S	Round	2.00	-----	-----	2.12
T	Round	2.50	-----	-----	2.62

Downloaded from Arrow.com.

UNIVERSAL WRAP AROUND BRACKETS – Round Cases

Case Style	Bracket Part Number	a	b	c
P	M295A601631	1.75	1.12	1.31
S	M295A601632	2.00	1.25	1.44
T	M295A601633	2.50	1.50	1.69

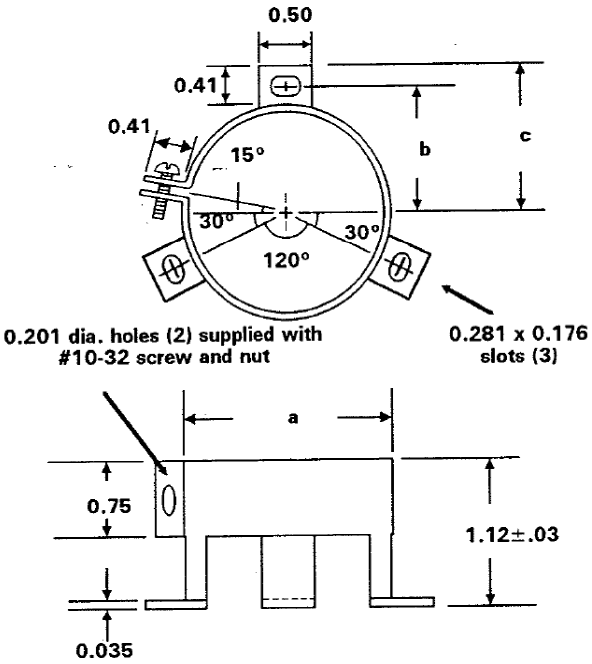

UNIVERSAL WRAP AROUND BRACKETS – Oval Cases

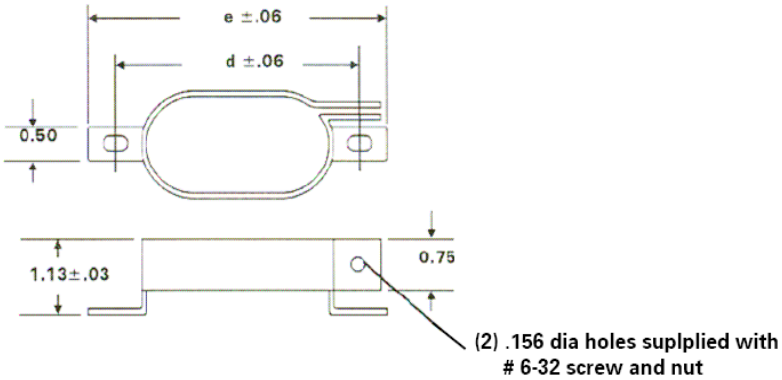

Case Style	Bracket Part Number	d	e
A	M128A2244AC21	2.69	3.13
B	M128A2244AB25	3.27	3.70
C	M128A2244AB22	3.44	3.88
D	M128A2244AB23	4.19	4.63

WRAP AROUND BRACKETS – Oval & Round Cases

Case Style	Bracket Part Number	d	e	w	t
A	M982706521	2.56	2.94	0.50	0.02
B	M982706531	3.06	3.50	0.63	0.02
C	M614A30161	3.31	3.81	0.75	0.03
D	M614A30151	4.06	4.56	0.75	0.03
P	M279A723524	2.50	2.88	0.75	0.04
S	M279A723522	2.75	3.12	0.75	0.04
T	M279A723523	3.25	3.62	0.75	0.04

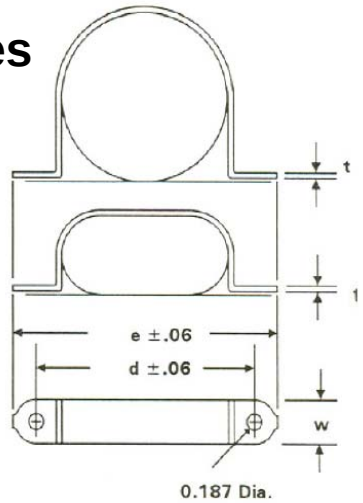

Downloaded from Arrow.com.

FOOTED BRACKETS – Oval & Round Cases

Case Height	Bracket Part Number
2.12	M302C920210
2.88	M302C920113
3.88	M302C920115
4.75	M302C920116
5.75	M302C920209

Case Style	d	e
A	2.56	3.00
B	3.13	3.56
C	3.38	3.81
D	4.13	4.56
P	2.33	2.76
S	2.57	3.00
T	3.07	3.50

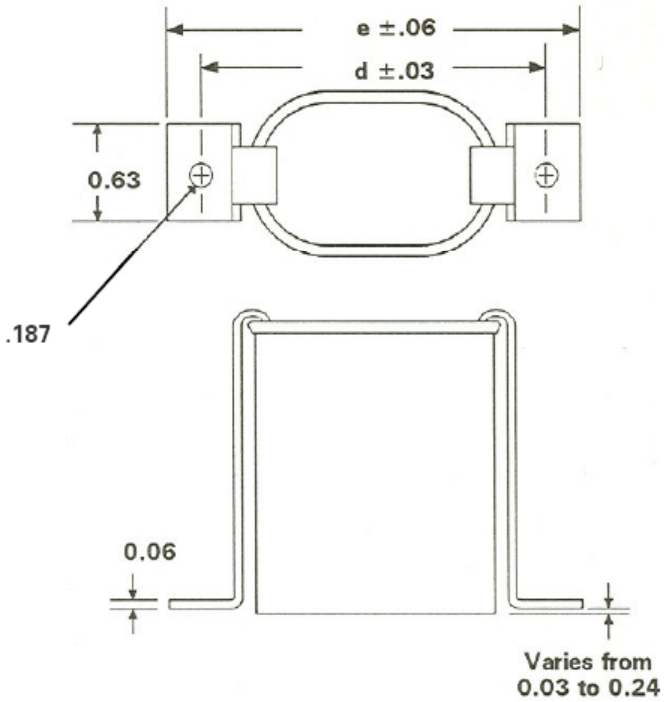

PROTECTIVE BOOT

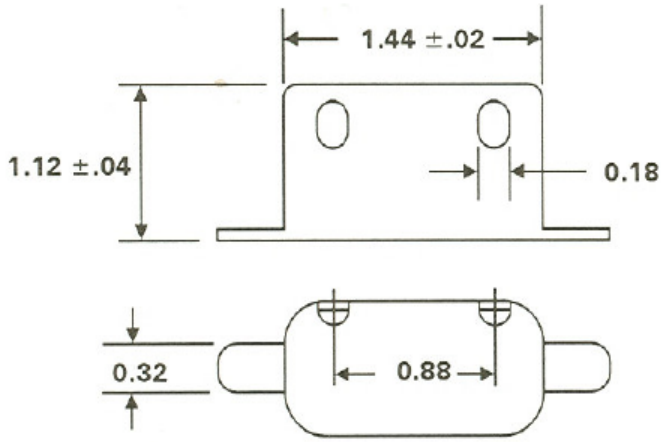

Boot Part Number	Temperature Rating
M614A52721	60ºC
M178A374421	105ºC

PROTECTIVE CAP

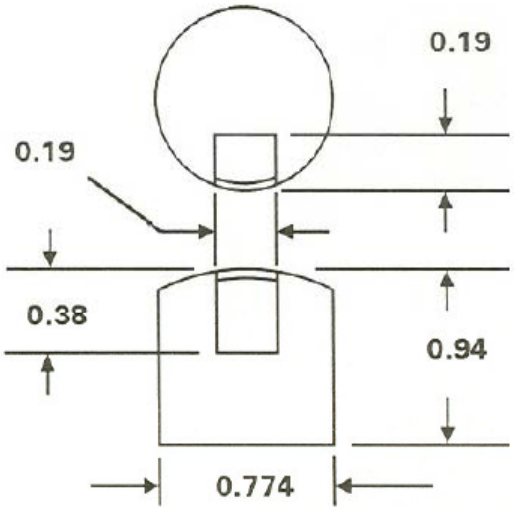

Cap Part Number	M115A155223

Downloaded from Arrow.com.

Capacitor Label

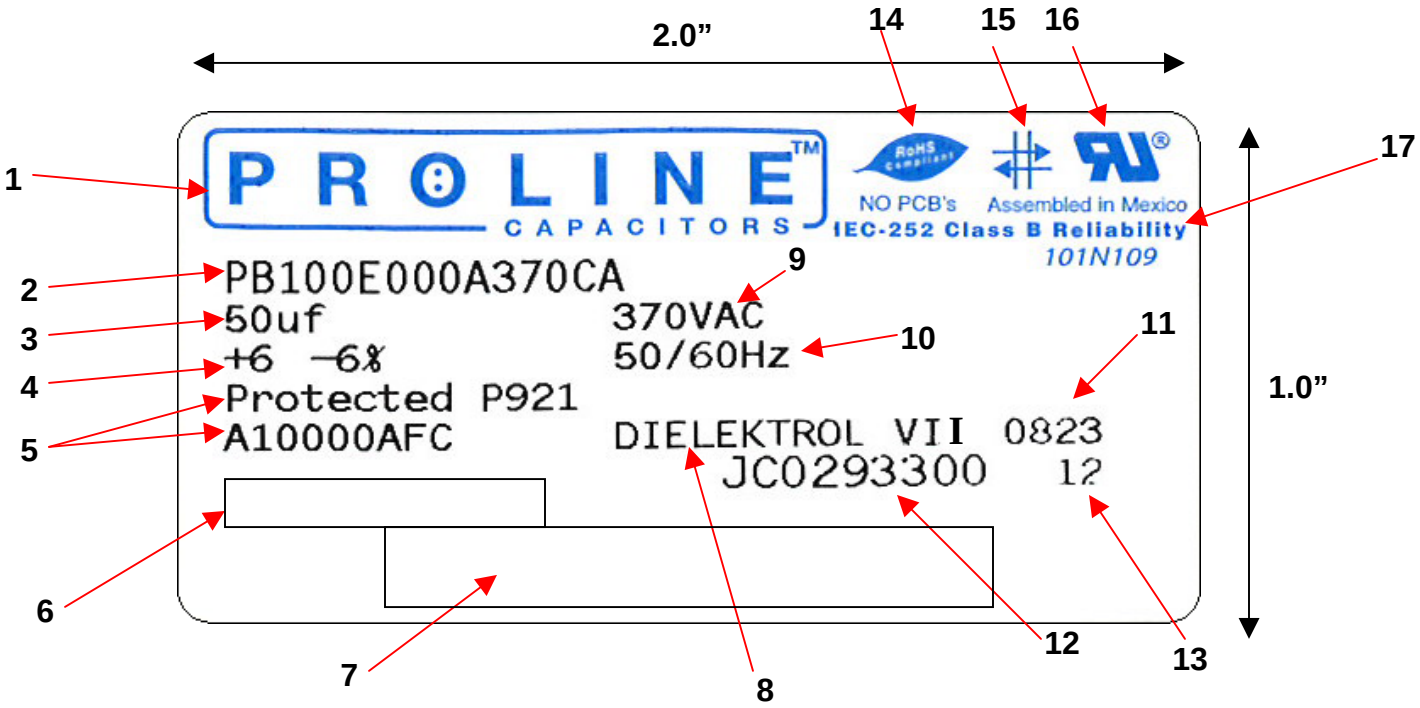

1. Product / Brand
2. PROLINE Catalog Model Number
3. Capacitance in Micro-Farads
4. Tolerance
5. UL Designation Including Available Fault Current (AFC) Rating
6. Customer Part Number
7. Bar Code
8. PROLINE Product Name of Dielectric Fluid
9. AC Voltage Rating
10. Frequency
11. Manufacturing Date Code

Example:

08	**23**
↑	↑
Year (Last Digits of Year)	Fiscal Week

12. Manufacturing WIP Job Number
13. Label Sequence Number
14. RoHS Compliant Logo
15. Self-Healing Symbol
16. UL Approved Logo
17. IEC-252 Class B Reliability Statement (10,000 Hr Reliability)

Downloaded from Arrow.com.

AVAILABLE REGAL-BELOIT COMPONENT CAPACITOR PUBLICATIONS		
Publication	**Description**	**Replaces**
GTC-001	AC Capacitors for Motor Run Applications	CPD-510
GTC-002	AC Capacitors for HID Lighting Applications	CPD-511
GTC-003	Capacitors for AC and DC General Purpose Applications	CPD-512
GTC-004	Screw Terminal Electrolytic Capacitors	CPD-517
GTC-005	Snubber, High Current DC, and Switching Capacitors	CPD-518, 519, 520
GTC-006	Dry Capacitors	New Pub.
GTC-007	Snap-In Electrolytic Capacitors	New Pub.
PLC-001	PROLINE Capacitors	New Pub.

Please contact your local Regal-Beloit Sales Representative for further information.

Call or write directly to:

PROLINE Capacitors
1946 West Cook Road
Fort Wayne, Indiana 46818 USA

Phone: (260) 416-5400
Fax: (260) 416-5460
Email: capacitors@regalbeloit.com

Downloaded from Arrow.com.

PROLINE Capacitors 1946 West Cook Road, Fort Wayne, Indiana 46818 USA

Phone: (260) 416-5400 **Fax:** (260) 416-5460 **Email:** capacitors@regalbeloit.com

www.prolinecapacitors.com

Downloaded from Arrow.com.