Alle Rechte vorbehalten/ *All rights reserved*

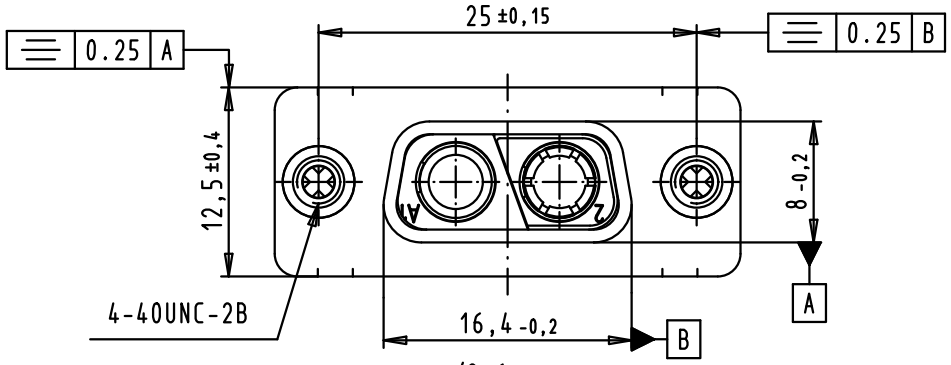

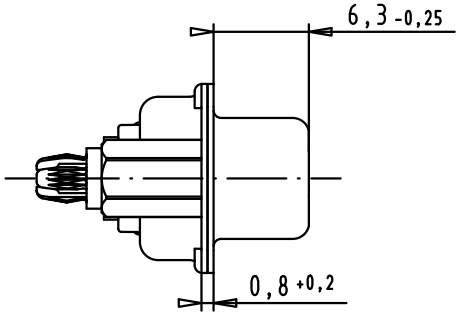

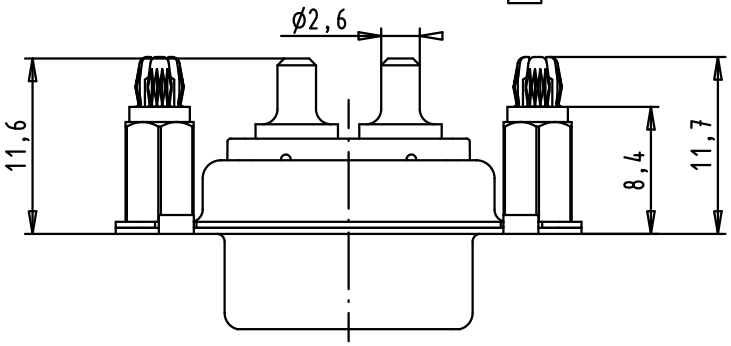

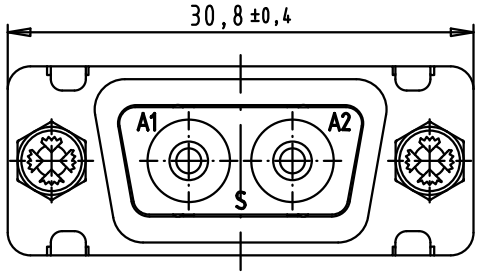

PC-board layout
view component side
thickness 1.6 mm

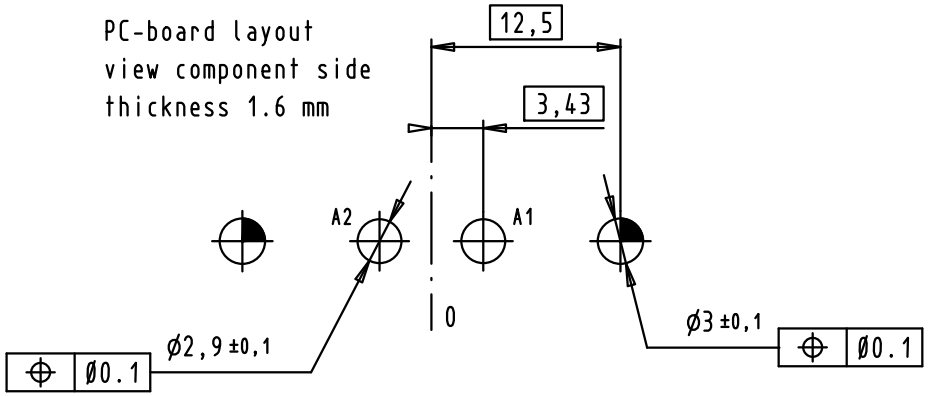

All Dimensions in mm
Original Size DIN A 4

Techn. Character.

Nicht tolerierte Maße/ *Free size tolerances*

	Dat.	Name	Maßstab/*Scale*
Detail.	14/12/11	SD	2 : 1
Insp.	14/12/11	JB	
Stand.			

D-sub mixed, 2W2, female, straight, 20A, board lock

Mod.	Dat.	Name
EC04183	14/12/11	SD

HARTING EURL
F-95972 Paris

TB 09 69 100 9098

Sub.

Blatt/ *page* 1/1

Part number	Performance level
09691009098	S4

Downloaded from Arrow.com.