This document was generated on 09/12/2018

PLEASE CHECK WWW.MOLEX.COM FOR LATEST PART INFORMATION

Part Number: 0514051819

Status: Active

Description: 1.25mm Pitch Mini Mi II System Wire-to-Wire Receptacle Housing, Dual Row, Floating Type, 18 Circuits

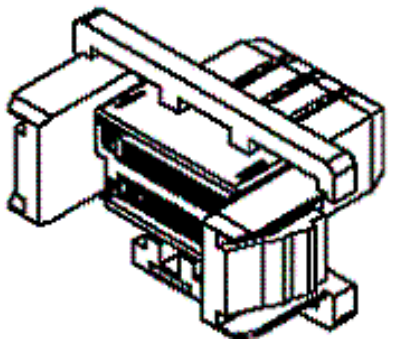

Series image - Reference only

Documents:

3D Model
Drawing (PDF)
Product Specification PS-51405-008-001 (PDF)
RoHS Certificate of Compliance (PDF)

Agency Certification	
UL	E29179
General	
Product Family	IDT and Solder Connectors
Series	51405
Crimp Quality Equipment	Yes
Product Name	Mini Mi II
UPC	822348180653
Use With	54596 IDT Receptacle Housing
Physical	
Circuits (Loaded)	18
Circuits (maximum)	18
Durability (mating cycles max)	3000
Gender	Receptacle
Glow-Wire Capable	No
Lock to Mating Part	None
Material - Metal	Phosphor Bronze
Material - Plating Mating	Gold
Material - Plating Termination	Tin
Net Weight	3975.622/mg
Number of Rows	2
Packaging Type	Tray
Panel Mount	Yes
Pitch - Mating Interface	1.25mm
Pitch - Termination Interface	1.25mm
Plating min - Mating	0.203µm
Plating min - Termination	2.032µm
Polarized to Mating Part	Yes
Stackable	No
Temperature Range - Operating	-20° to +80°C
Termination Interface: Style	Through Hole
Wire Size AWG	26, 28
Electrical	
Current - Maximum per Contact	1.5A
Voltage - Maximum	100V AC (RMS)/DC
Material Info	
Reference - Drawing Numbers	
Product Specification	PS-51405-008-001
Sales Drawing	SD-51405-007

EU ELV
Not Relevant

EU RoHS
Compliant

China RoHS

REACH SVHC
Not Contained Per - ED/61/2018 (27 June 2018)

Halogen-Free Status
Not Low-Halogen

Need more information on product environmental compliance?

Email productcompliance@molex.com
Please visit the Contact Us section for any non-product compliance questions.

China ROHS	Green Image
ELV	Not Relevant
Prop65	Compliant
RoHS Phthalates	Not Contained

Search Parts in this Series
51405 Series

This document was generated on 09/12/2018

PLEASE CHECK WWW.MOLEX.COM FOR LATEST PART INFORMATION

Downloaded from Arrow.com.