Connector Location A

Connector Location B

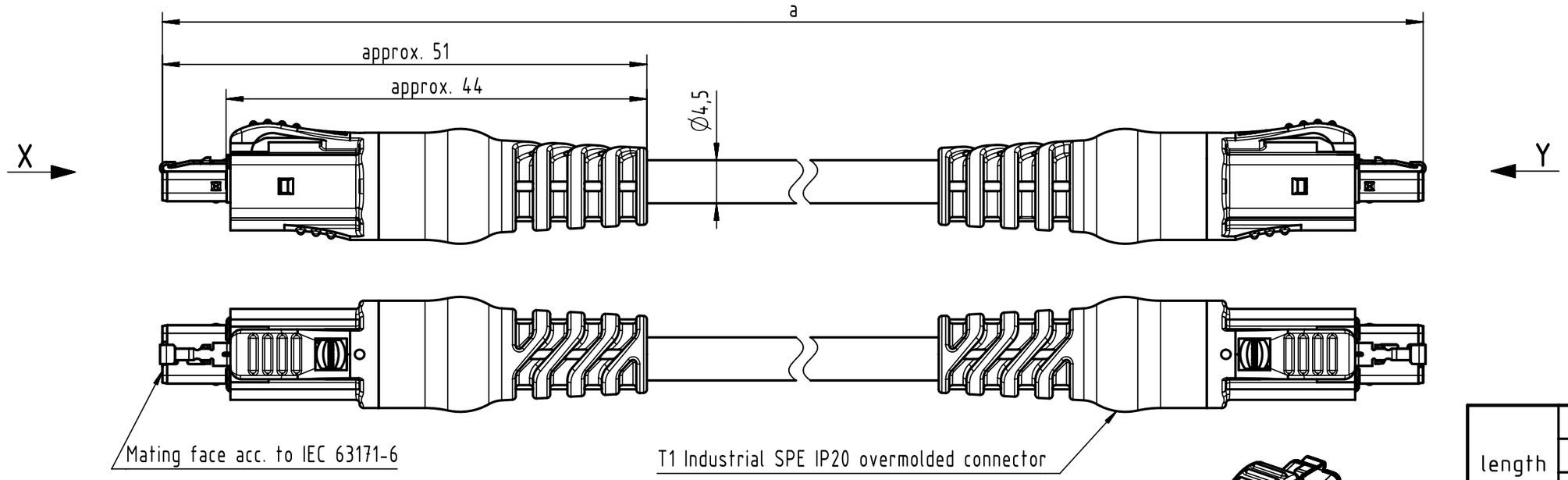

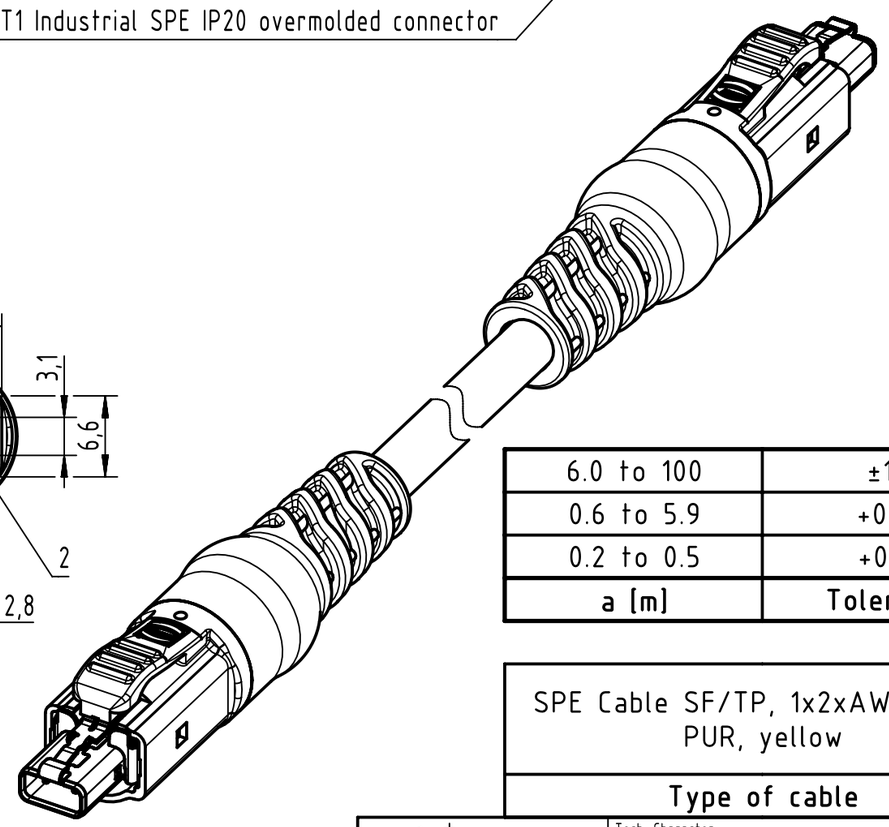

X
male

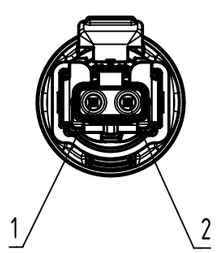

Loading Plan

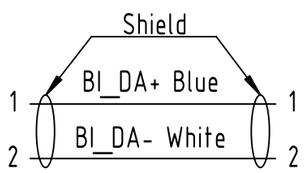

Y
male

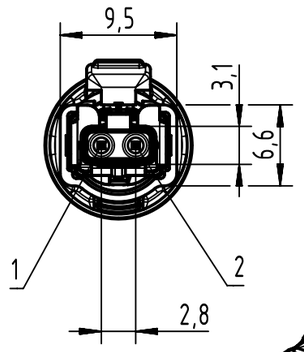

6.0 to 100	±1%
0.6 to 5.9	+0.04
0.2 to 0.5	+0.02
a [m]	**Tolerance**

length in "1m" step	100	XXX=000
	99	XXX=990
	⋮	⋮
	12	XXX=120
	11	XXX=110
length in "0.1m" step	10	XXX=100
	9.9	XXX=099
	9.8	XXX=098
	⋮	⋮
	0.5	XXX=005
	0.4	XXX=004
	0.3	XXX=003
	0.2	XXX=002
Step	**a [m]**	**XXX**

SPE Cable SF/TP, 1x2xAWG 26/7, PUR, yellow	33280101001XXX
Type of cable	**Part no.**

Temperature range:
- Fixed installation: -40°C ... +80°C
- Flexible installation: -25°C ... +80°C

All Dimensions in mm	Tech. Character.	Free size tol.		According to production drawing
All rights reserved	Created by 402676 Gross	Inspected by COSTEA Costea	Standardisation MUNTEANV Muntean	Date 2020-12-16	State Final Release
Department HCS - RO	Title T1 SPE IP20 1x2xAWG26/7 PUR			Doc-Key / ECM-Nr. 100819333/UGD/000/C 500000186289
HARTING Customised Solutions D-32339 Espelkamp	Type TB	Number 33280101001XXX		Rev. C	Page 1/1

Downloaded from Arrow.com.

A3