SERIES: PYB15 | DESCRIPTION: DC-DC CONVERTER

FEATURES

- up to 15 W isolated output
- industry standard pinout
- 4:1 input range (9~36 Vdc, 18~75 Vdc)
- smaller package
- single/dual regulated outputs
- 1,500 Vdc isolation
- continuous short circuit, over current protection, over voltage protection
- temperature range (-40~85°C)
- six-sided metal shielding
- efficiency up to 90%
- EN 60950

MODEL	input voltage typ (Vdc)	input voltage range (Vdc)	output voltage (Vdc)	output current min (mA)	output current max (mA)	output power max (W)	ripple and noise[2] max (mVp-p)	efficiency typ (%)
PYB15-Q24-S3[3,*]	24	9~36	3.3	200	4000	13.2	100	87
PYB15-Q24-S5[3]	24	9~36	5	150	3000	15	100	90
PYB15-Q24-S12[3,*]	24	9~36	12	63	1250	15	100	89
PYB15-Q24-S15[3,*]	24	9~36	15	50	1000	15	100	89
PYB15-Q24-S24[3,*]	24	9~36	24	31	625	15	100	90
PYB15-Q24-D5[3,*]	24	9~36	±5	±75	±1500	15	100	86
PYB15-Q24-D12[3,*]	24	9~36	±12	±32	±625	15	100	88
PYB15-Q24-D15[3]	24	9~36	±15	±25	±500	15	100	88
PYB15-Q48-S3[1,*]	48	18~75	3.3	200	4000	13.2	100	87
PYB15-Q48-S5[1,*]	48	18~75	5	150	3000	15	100	89
PYB15-Q48-S12[1,*]	48	18~75	12	63	1250	15	100	88
PYB15-Q48-S15[1,*]	48	18~75	15	50	1000	15	100	90
PYB15-Q48-D5[,*]	48	18~75	±5	±75	±1500	15	100	86
PYB15-Q48-D12*	48	18~75	±12	±32	±625	15	100	88
PYB15-Q48-D15*	48	18~75	±15	±25	±500	15	100	89

Notes:
1. UL approved
2. Ripple and noise are measured at 20 MHz BW by "parallel cable" method with 1 μF ceramic and 10 μF electrolytic capacitors on the output.
3. Model is not CE certified.
4. * Discontinued model.

PART NUMBER KEY

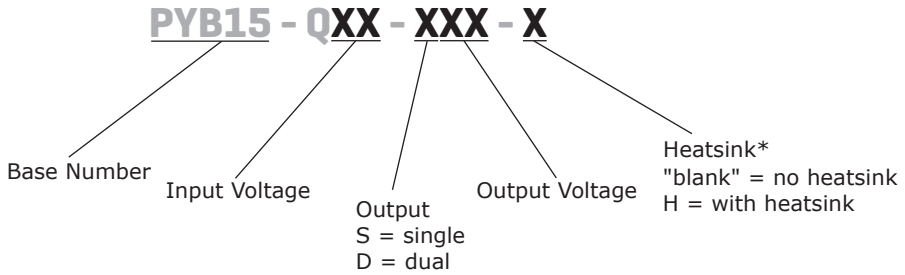

Notes: *Discontinued heatsink versions.

Please read our datasheet & drawing disclaimer here.
Downloaded from Arrow.com.

INPUT

parameter	conditions/description	min	typ	max	units
operating input voltage	24 Vdc input models 48 Vdc input models	9 18	24 48	36 75	Vdc Vdc
start-up voltage	24 Vdc input models 48 Vdc input models			9 17.8	Vdc Vdc
under voltage shutdown[1]	24 Vdc input models 48 Vdc input models	7.5 16			Vdc Vdc
surge voltage	for maximum of 1 second 24 Vdc input models 48 Vdc input models	 -0.7 -0.7		 50 100	 Vdc Vdc
start-up time	nominal input, constant load		10		ms
filter	pi filter				
CTRL[2]	models ON (CTRL open or connect TTL high level, 2.5~12 Vdc)				
	models OFF (CTRL connect GND or low level, 0~1.2 Vdc)				
	input current (models OFF)		1		mA

Notes: 1. Contact CUI if you are planning to use this feature in your application.
2. CTRL pin voltage is referenced to GND.

OUTPUT

parameter	conditions/description	min	typ	max	units
line regulation	full load, input voltage from low to high		±0.2	±0.5	%
load regulation	5% to 100% load		±0.5	±1	%
cross regulation	dual output models: main output 50% load, secondary output from 10% to 100% load			±5	%
voltage accuracy			±1	±3	%
voltage balance[3]	dual output, balanced loads		±0.5	±1	%
adjustability[4]			±10		%
switching frequency	PWM mode		300		kHz
transient recovery time	25% load step change		300	500	µs
transient response deviation	25% load step change		±3	±5	%
temperature coefficient	100% load			±0.02	%/°C

Note: 3. For dual output models, unbalanced loads should not exceed ±5%. If ±5% is exceeded, it may not meet all specifications.
4. Output trimming available on single output models only.

PROTECTIONS

parameter	conditions/description	min	typ	max	units
short circuit protection	hiccup, continuous, automatic recovery				
over current protection			160		%
over voltage protection	3.3 Vdc output models 5 Vdc output models 12 Vdc output models 15 Vdc output models 24 Vdc output models		3.9 6.2 15 18 30		Vdc Vdc Vdc Vdc Vdc

SAFETY AND COMPLIANCE

parameter	conditions/description	min	typ	max	units
isolation voltage	input to output for 1 minute at 1 mA max.	1,500			Vdc
isolation resistance	input to output at 500 Vdc	1,000			MΩ
safety approvals[5]	certified to 60950-1: UL, EN				

Note: 5. See specific models noted on page 1, excludes heat sink versions.

Downloaded from Arrow.com.

SAFETY AND COMPLIANCE (CONTINUED)

parameter	conditions/description	min	typ	max	units
conducted emissions	CISPR22/EN55022, class A, class B (external circuit required, see Figure 1-b)				
radiated emissions	CISPR22/EN55022, class A, class B (external circuit required, see Figure 1-b)				
ESD	IEC/EN61000-4-2, class B, contact ± 4kV				
radiated immunity	IEC/EN61000-4-3, class A, 10V/m				
EFT/burst	IEC/EN61000-4-4, class B, ± 2kV (external circuit required, see Figure 1-a)				
surge	IEC/EN61000-4-5, class B, ± 2kV (external circuit required, see Figure 1-a)				
conducted immunity	IEC/EN61000-4-6, class A, 3 Vr.m.s				
voltage dips & interruptions	IEC/EN61000-4-29, class B, 0%-70%				
MTBF	as per MIL-HDBK-217F @ 25°C	1,000,000			hours
RoHS	2011/65/EU				

ENVIRONMENTAL

parameter	conditions/description	min	typ	max	units
operating temperature	see derating curves	-40		85	°C
storage temperature		-55		125	°C
storage humidity	non-condensing	5		95	%
case temperature	at full load, Ta=71°C			105	°C
vibration	10~55 Hz for 30 min. along X, Y and Z axis		10		G

SOLDERABILITY

parameter	conditions/description	min	typ	max	units
hand soldering	1.5 mm from case for 10 seconds			300	°C
wave soldering	see wave soldering profile			260	°C

WAVE SOLDERING PROFILE

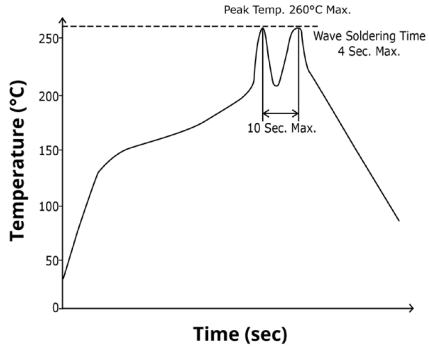

MECHANICAL

parameter	conditions/description	min	typ	max	units
dimensions	board mount: 50.8 x 25.4 x 11.8 board mount with heatsink: 50.8 x 25.4 x 16.3				mm mm
case material	aluminum alloy				
weight	board mount board mount with heatsink		28 36		g g

Downloaded from Arrow.com.

MECHANICAL DRAWING

BOARD MOUNT

units: mm[inch]
tolerance: ±0.3[±0.012]
pin diameter tolerance: ±0.10[±0.004]
pin height tolerance: ±0.50[±0.020]

PIN CONNECTIONS		
PIN	Single Output	Dual Output
1	GND	GND
2	Vin	Vin
3	+Vo	+Vo
4	Trim	0V
5	0V	-Vo
6	CTRL	CTRL

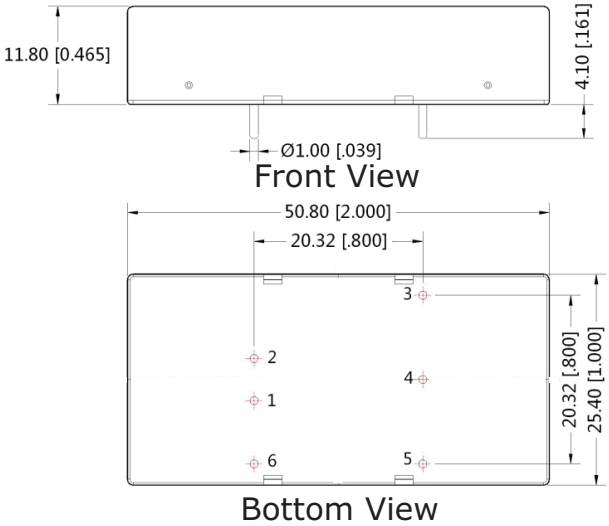

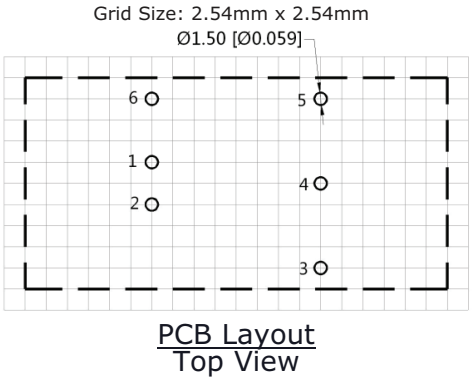

BOARD MOUNT WITH HEATSINK

units: mm[inch]
tolerance: ±0.3[±0.012]
pin diameter tolerance: ±0.10[±0.004]
pin height tolerance: ±0.50[±0.020]

PIN CONNECTIONS		
PIN	Single Output	Dual Output
1	GND	GND
2	Vin	Vin
3	+Vo	+Vo
4	Trim	0V
5	0V	-Vo
6	CTRL	CTRL

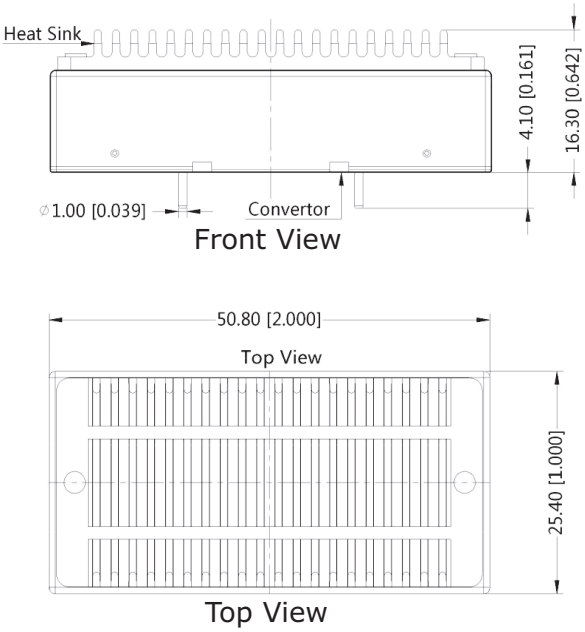

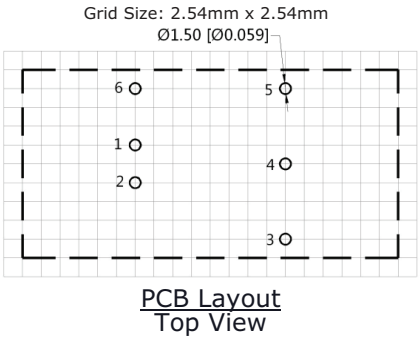

Downloaded from Arrow.com.

DERATING CURVES

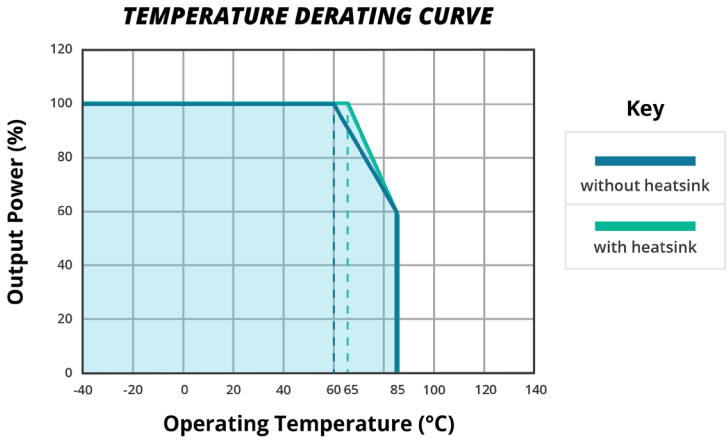

EMC RECOMMENDED CIRCUIT

Figure 1

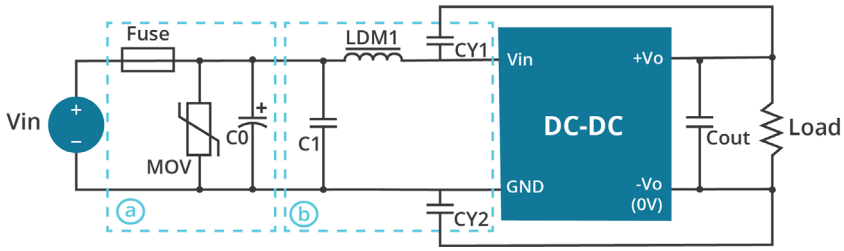

Table 1

Recommended external circuit components		
Vin (Vdc)	24	48
FUSE	Choose according to input current	
MOV	S14K35	S14K60
LDM1	4.7µH	4.7µH
C0	330µF/50V	330µF/100V
C1	1µF/50V	1µF/100V
CY1	1nF/2kV	1nF/2kV
CY2	1nF/2kV	1nF/2kV

Note: 1. See Table 2 for Cout values.

Downloaded from Arrow.com.

APPLICATION NOTES

1. **Recommended circuit**
   This series has been tested according to the following recommended testing circuit before leaving the factory. This series should be tested under load (see Figure 2). If you want to further decrease the input/output ripple, you can increase the capacitance accordingly or choose capacitors with low ESR (see Table 2). However, the capacitance of the output filter capacitor must be appropriate. If the capacitance is too high, a startup problem might arise. For every channel of the output, to ensure safe and reliable operation, the maximum capacitance must be less than the maximum capacitive load (see Table 3).

Figure 2

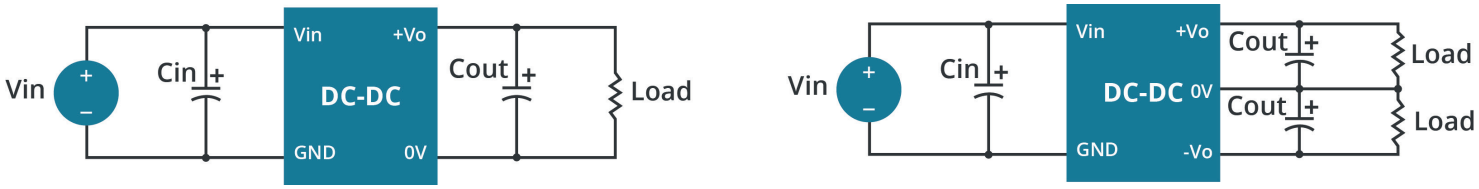

Table 2

Single Vout (Vdc)	Cin (μF)	Cout (μF)	Dual Vout (Vdc)	Cin (μF)	Cout[1] (μF)
3.3	100	470	--	--	--
5	100	470	±5	100	220
12	100	220	±12	100	100
15	100	220	±15	100	100
24	100	100	--	--	--

Note: 1. For each output.

Table 3

Single Vout (Vdc)	Max. Capacitive Load (μF)	Dual Vout (Vdc)	Max. Capacitive Load[1] (μF)
3.3	10200	--	--
5	4020	5	4800
12	1035	12	800
15	705	15	500
24	470	--	--

Note: 1. For each output.

2. **Output voltage trimming**
   Leave open if not used.

Figure 3
Application Circuit for Trim pin
(part in broken line is the interior of models)

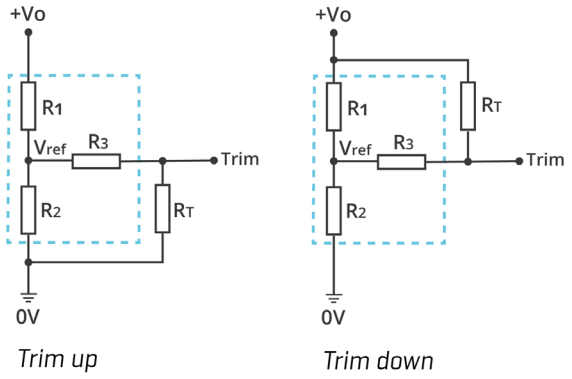

Formula for Trim Resistor

up: $R_T = \frac{aR_2}{R_2 - a} - R_3$ $\quad a = \frac{Vref}{Vo' - Vref} \cdot R_1$

down: $R_T = \frac{aR_1}{R_1 - a} - R_3$ $\quad a = \frac{Vo' - Vref}{Vref} \cdot R_2$

Note: Value for R1, R2, R3, and Vref refer to Table 4
R_T: Trim Resistor
a: User-defined parameter, no actual meanings
Vo': The trim up/down voltage

Table 4

Vout (Vdc)	R1 (kΩ)	R2 (kΩ)	R3 (kΩ)	Vref (V)
3.3	4.801	2.863	15	1.24
5	2.883	2.864	10	2.5
12	10.971	2.864	17.8	2.5
15	14.497	2.864	17.8	2.5
24	24.872	2.863	20	2.5

Note: 1. Minimum load shouldn't be less than 5%, otherwise ripple may increase dramatically. Operation under minimum load will not damage the converter, however, they may not meet all specifications listed.
2. Maximum capacitive load is tested at input voltage range and full load.
3. All specifications are measured at Ta=25°C, humidity<75%, nominal input voltage and rated output load unless otherwise specified.

Downloaded from Arrow.com.

REVISION HISTORY

rev.	description	date
1.0	initial release	06/26/2013
1.01	updated spec	08/15/2013
1.02	added CE safety approval	10/29/2013
1.03	updated spec	08/18/2014
1.04	added UL approval to some models	06/15/2015
1.05	discontinued heat sink versions	02/07/2019
1.06	safeties updated in features and safety approvals line	02/24/2021
1.07	discontinued model PYB15-Q48-S5	03/02/2021
1.08	derating curve and circuit figures updated	08/18/2021
1.09	CE certification updated for 24V models	12/07/2022
1.10	discontinued models PYB15-Q24-S3, PYB15-Q24-S12, PYB15-Q24-S15, PYB15-Q24-D5, PYB15-Q24-D12, PYB15-Q48-S3, PYB15-Q48-S12, PYB15-Q48-S15, PYB15-Q48-D5, PYB15-Q48-D12 & PYB15-Q48-D15	04/11/2023
1.11	discontinued model PYB15-Q24-S24	10/04/2023

The revision history provided is for informational purposes only and is believed to be accurate.

CUI INC
a bel group

Headquarters
20050 SW 112th Ave.
Tualatin, OR 97062
800.275.4899

Fax 503.612.2383
cui.com
techsupport@cui.com

CUI offers a two (2) year limited warranty. Complete warranty information is listed on our website.

CUI reserves the right to make changes to the product at any time without notice. Information provided by CUI is believed to be accurate and reliable. However, no responsibility is assumed by CUI for its use, nor for any infringements of patents or other rights of third parties which may result from its use.

CUI products are not authorized or warranted for use as critical components in equipment that requires an extremely high level of reliability. A critical component is any component of a life support device or system whose failure to perform can be reasonably expected to cause the failure of the life support device or system, or to affect its safety or effectiveness.

Downloaded from Arrow.com.