OD5010 Series

DC Fans - 5, 12, 24V
50mm x 10mm (2.0" x 0.4")

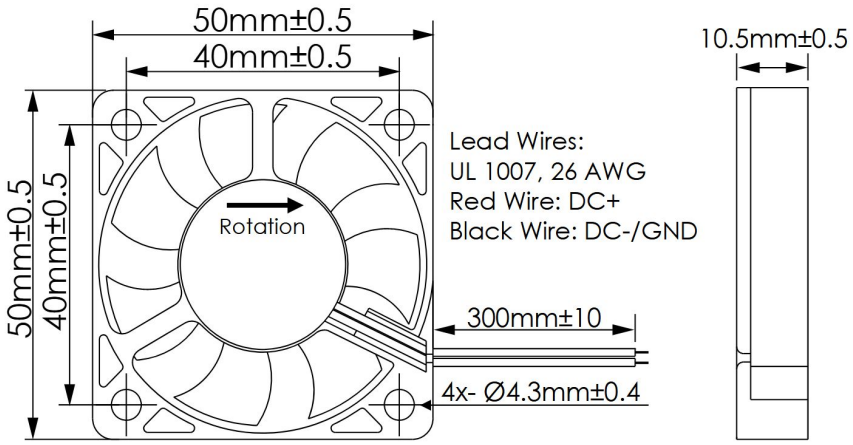

Frame	PBT, UL94 V-0 Plastic
Impeller	PBT, UL94 V-0 Plastic
Connection	2x Lead Wires, 26 AWG
Motor	Brushless DC, Auto Cutoff, Auto Restart, Electronically Protected, Polarity Protected
Bearing System	Ball Bearings
Dielectric Strength	500VDC/min, <1mA
Insulation Resistance	≥10M Ohm @ 500 VDC

Operating Temperature
-20°C ~ +65°C

Storage Temperature
-20°C ~ +75°C

Life Expectancy
70,000 Hours (L10 at 40°C)

Available Options:
Tachometer Output
PWM Speed Control Input
Alarm Output
Sealed Sleeve Bearings
IP Ratings

Weight: 0.07 lbs

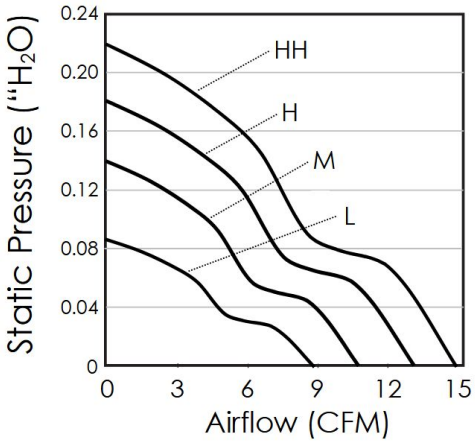

Part Number	Rated Voltage (Volts DC)	Voltage Range (Volts DC)	Input Power (Watts)	Rated Current (Amps)	Rated Speed (RPM)	Max Airflow (CFM)	Noise Level (dBA)	Max Static Pressure ("H_2O)
OD5010-05HHB	5	4.5 ~ 5.5	2.40	0.48	7150	14.9	37.4	0.22
OD5010-05HB	5	4.5 ~ 5.5	1.92	0.38	6490	12.7	35.1	0.18
OD5010-05MB	5	4.5 ~ 5.5	1.68	0.34	5475	10.8	30.2	0.14
OD5010-05LB	5	4.5 ~ 5.5	1.44	0.29	4425	8.6	25.4	0.09
OD5010-12HHB	12	8 ~ 13.8	2.40	0.20	7150	14.9	37.4	0.22
OD5010-12HB	12	8 ~ 13.8	1.92	0.16	6490	12.7	35.1	0.18
OD5010-12MB	12	8 ~ 13.8	1.68	0.14	5475	10.8	30.2	0.14
OD5010-12LB	12	8 ~ 13.8	1.44	0.12	4425	8.6	25.4	0.09
OD5010-24HHB	24	20 ~ 26.4	2.40	0.10	7150	14.9	37.4	0.22
OD5010-24HB	24	20 ~ 26.4	1.92	0.08	6490	12.7	35.1	0.18
OD5010-24MB	24	20 ~ 26.4	1.68	0.07	5475	10.8	30.2	0.14
OD5010-24LB	24	20 ~ 26.4	1.44	0.06	4425	8.6	25.4	0.09

Knight Electronics, Inc.
10557 Metric Drive
Dallas, TX 75243
214-340-0265

Revised 6/3/2022
m0

Orion Fans
Information and data is subject to change without prior notification

Downloaded from Arrow.com.

OD5010-12HB02A

DC Fan with Alarm - 12V
50mm x 10mm (2.0" x 0.4")

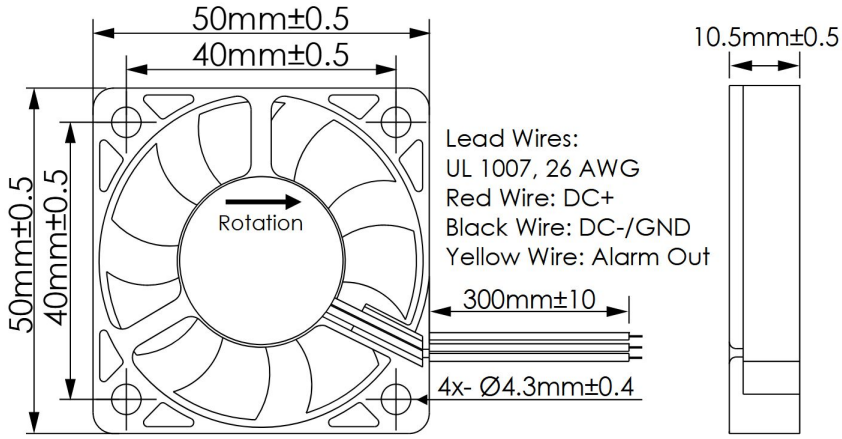

Frame	PBT, UL94 V-0 Plastic
Impeller	PBT, UL94 V-0 Plastic
Connection	3x Lead Wires, 26 AWG
Motor	Brushless DC, Auto Cutoff, Auto Restart, Electronically Protected, Polarity Protected
Bearing System	Ball Bearings
Dielectric Strength	500VDC/min, <1mA
Insulation Resistance	≥10M Ohm @ 500 VDC

Operating Temperature
-20°C ~ +65°C

Storage Temperature
-20°C ~ +75°C

Life Expectancy
70,000 Hours (L10 at 40°C)

Available Options:
Open Collector Alarm Output

Weight: 0.07 lbs

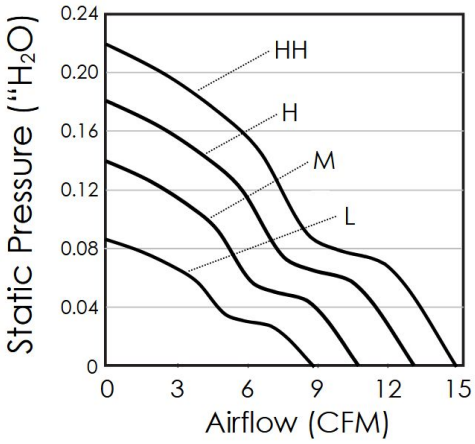

Part Number	Rated Voltage (Volts DC)	Voltage Range (Volts DC)	Input Power (Watts)	Rated Current (Amps)	Rated Speed (RPM)	Max Airflow (CFM)	Noise Level (dBA)	Max Static Pressure ("H_2O)
OD5010-12HB02A	12	8 ~ 13.8	1.92	0.16	6490	12.7	35.1	0.18

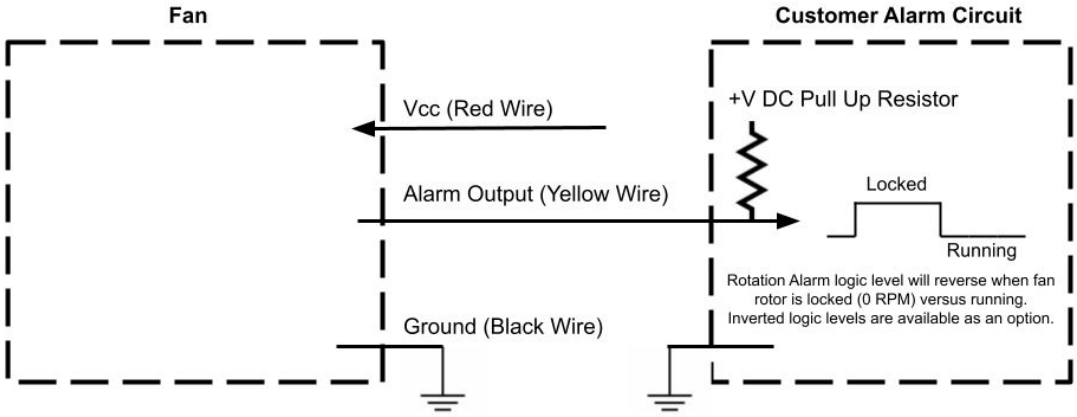

Alarm Max Pullup Voltage: ≤12V
Alarm Max Sink Current: 5mA

Knight Electronics, Inc.
10557 Metric Drive
Dallas, TX 75243
214-340-0265

Revised 6/3/2022
m0

Orion Fans
Information and data is subject to change without prior notification

Downloaded from Arrow.com.

OD5010-12MB02A

DC Fan with Alarm - 12V
50mm x 10mm (2.0" x 0.4")

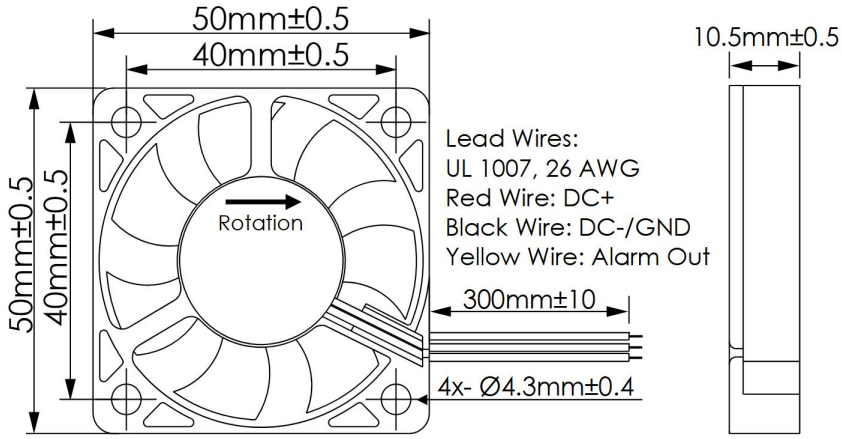

Frame	PBT, UL94 V-0 Plastic
Impeller	PBT, UL94 V-0 Plastic
Connection	3x Lead Wires, 26 AWG
Motor	Brushless DC, Auto Cutoff, Auto Restart, Electronically Protected, Polarity Protected
Bearing System	Ball Bearings
Dielectric Strength	500VDC/min, <1mA
Insulation Resistance	≥10M Ohm @ 500 VDC

Operating Temperature
-20°C ~ +65°C

Storage Temperature
-20°C ~ +75°C

Life Expectancy
70,000 Hours (L10 at 40°C)

Available Options:
Open Collector Alarm Output

Weight: 0.07 lbs

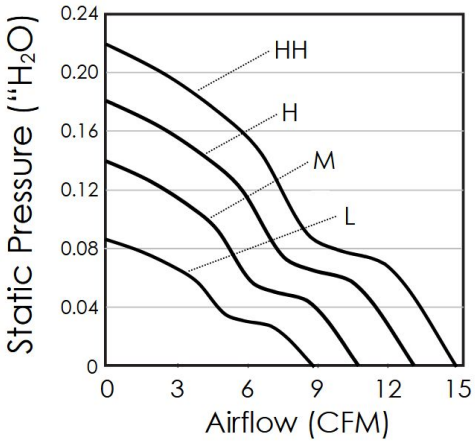

Part Number	Rated Voltage (Volts DC)	Voltage Range (Volts DC)	Input Power (Watts)	Rated Current (Amps)	Rated Speed (RPM)	Max Airflow (CFM)	Noise Level (dBA)	Max Static Pressure ("H_2O)
OD5010-12MB02A	12	8 ~ 13.8	1.68	0.14	5475	10.8	30.2	0.14

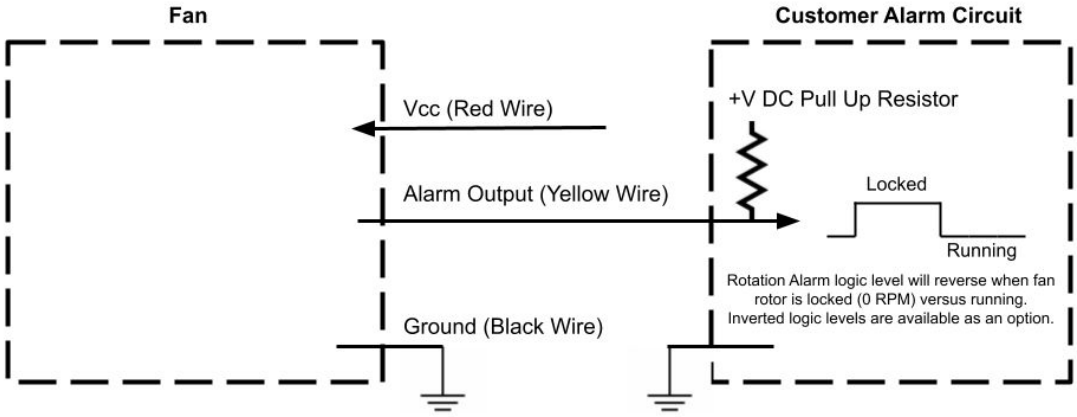

Alarm Max Pullup Voltage: ≤12V
Alarm Max Sink Current: 5mA

Knight Electronics, Inc.
10557 Metric Drive
Dallas, TX 75243
214-340-0265

Revised 6/3/2022
m0

Orion Fans
Information and data is subject to change without prior notification

Downloaded from Arrow.com.

OD5010-24HB02A

DC Fan with Alarm - 24V
50mm x 10mm (2.0" x 0.4")

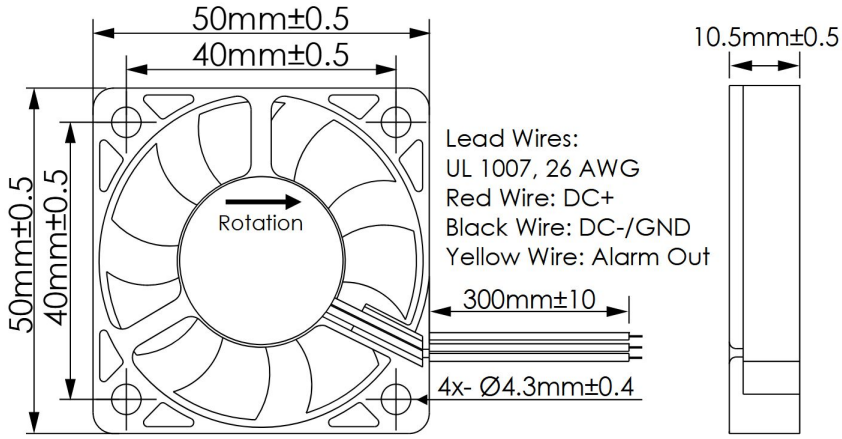

Frame	PBT, UL94 V-0 Plastic
Impeller	PBT, UL94 V-0 Plastic
Connection	3x Lead Wires, 26 AWG
Motor	Brushless DC, Auto Cutoff, Auto Restart, Electronically Protected, Polarity Protected
Bearing System	Ball Bearings
Dielectric Strength	500VDC/min, <1mA
Insulation Resistance	≥10M Ohm @ 500 VDC

Operating Temperature
-20°C ~ +65°C

Storage Temperature
-20°C ~ +75°C

Life Expectancy
70,000 Hours (L10 at 40°C)

Available Options:
Open Collector Alarm Output

Weight: 0.07 lbs

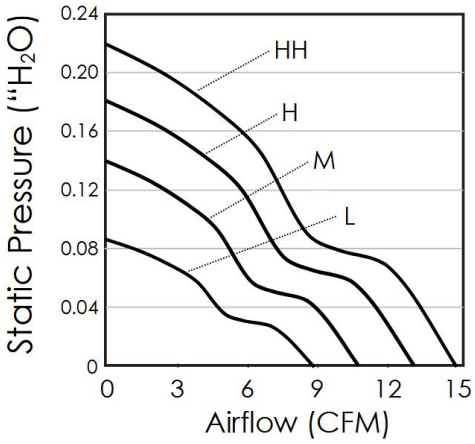

Part Number	Rated Voltage (Volts DC)	Voltage Range (Volts DC)	Input Power (Watts)	Rated Current (Amps)	Rated Speed (RPM)	Max Airflow (CFM)	Noise Level (dBA)	Max Static Pressure ("H_2O)
OD5010-24HB02A	24	20 ~ 26.4	1.92	0.08	6490	12.7	35.1	0.18

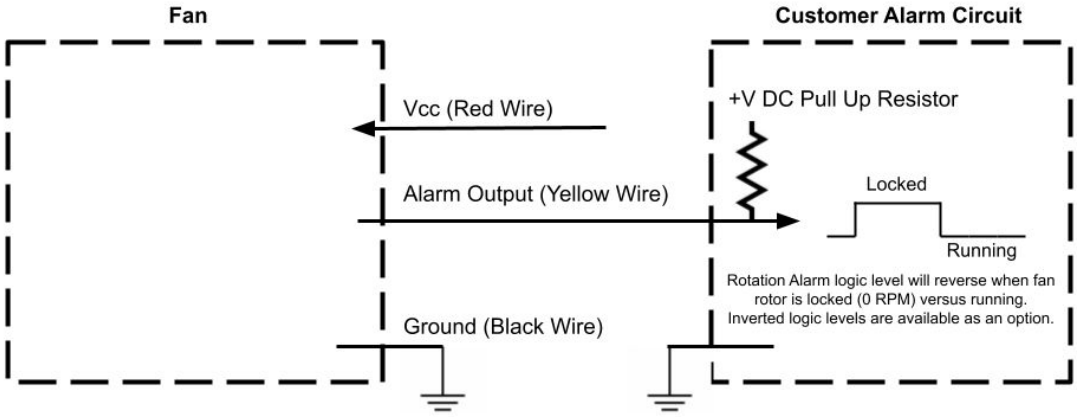

Alarm Max Pullup Voltage: ≤24V
Alarm Max Sink Current: 5mA

Knight Electronics, Inc.
10557 Metric Drive
Dallas, TX 75243
214-340-0265

Revised 6/3/2022
m0

Orion Fans
Information and data is subject to change without prior notification

Downloaded from Arrow.com.

OD5010-24MB02A

DC Fan with Alarm - 24V
50mm x 10mm (2.0" x 0.4")

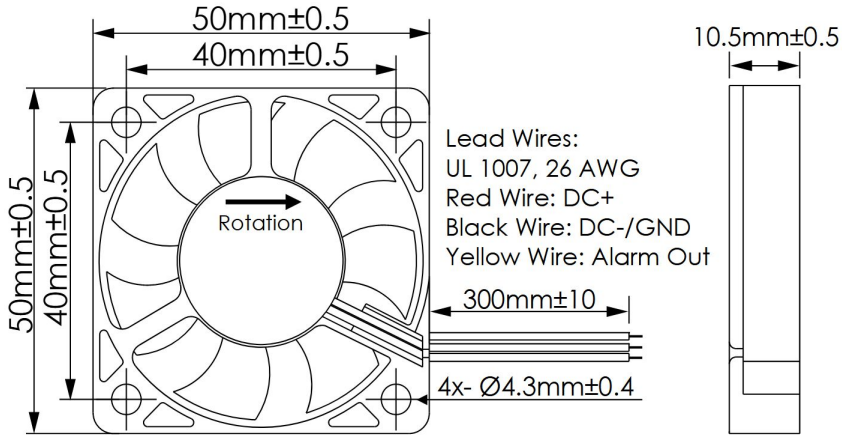

Frame	PBT, UL94 V-0 Plastic
Impeller	PBT, UL94 V-0 Plastic
Connection	3x Lead Wires, 26 AWG
Motor	Brushless DC, Auto Cutoff, Auto Restart, Electronically Protected, Polarity Protected
Bearing System	Ball Bearings
Dielectric Strength	500VDC/min, <1mA
Insulation Resistance	≥10M Ohm @ 500 VDC

Operating Temperature
-20°C ~ +65°C

Storage Temperature
-20°C ~ +75°C

Life Expectancy
70,000 Hours (L10 at 40°C)

Available Options:
Open Collector Alarm Output

Weight: 0.07 lbs

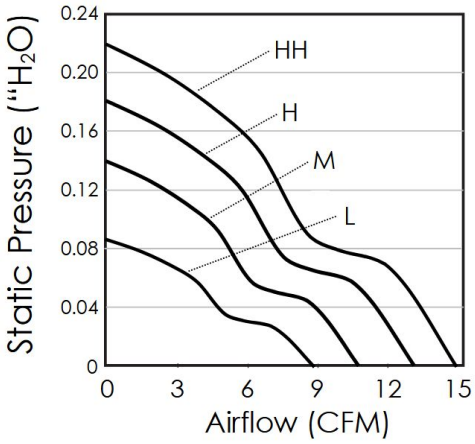

Part Number	Rated Voltage (Volts DC)	Voltage Range (Volts DC)	Input Power (Watts)	Rated Current (Amps)	Rated Speed (RPM)	Max Airflow (CFM)	Noise Level (dBA)	Max Static Pressure ("H_2O)
OD5010-24MB02A	24	20 ~ 26.4	1.68	0.07	5475	10.8	30.2	0.14

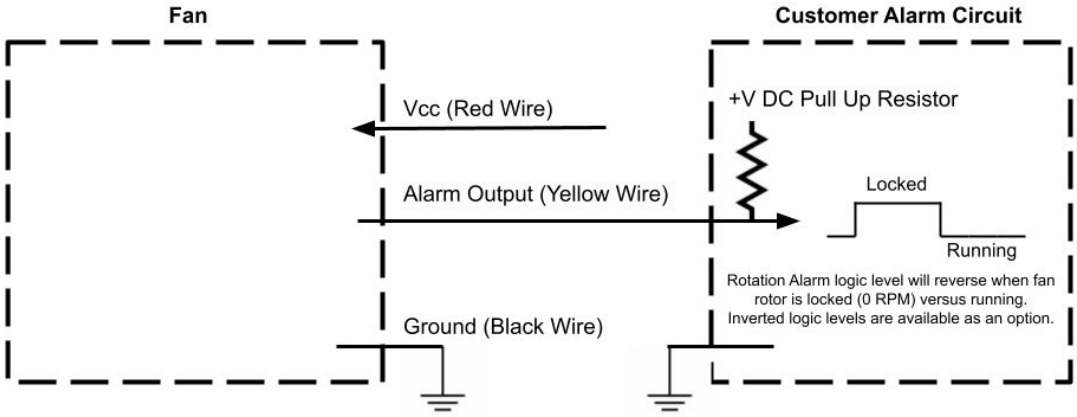

Alarm Max Pullup Voltage: ≤24V
Alarm Max Sink Current: 5mA

Knight Electronics, Inc.
10557 Metric Drive
Dallas, TX 75243
214-340-0265

Revised 6/3/2022
m0

Orion Fans
Information and data is subject to change without prior notification

Downloaded from Arrow.com.