MICRO SWITCH
FREEPORT ILLINOIS
A DIVISION OF HONEYWELL
FED. MFG. CODE 91929

SWITCH - BASIC

CATALOG LISTING
YZ - 2R
AWF2000
FAA-PMA

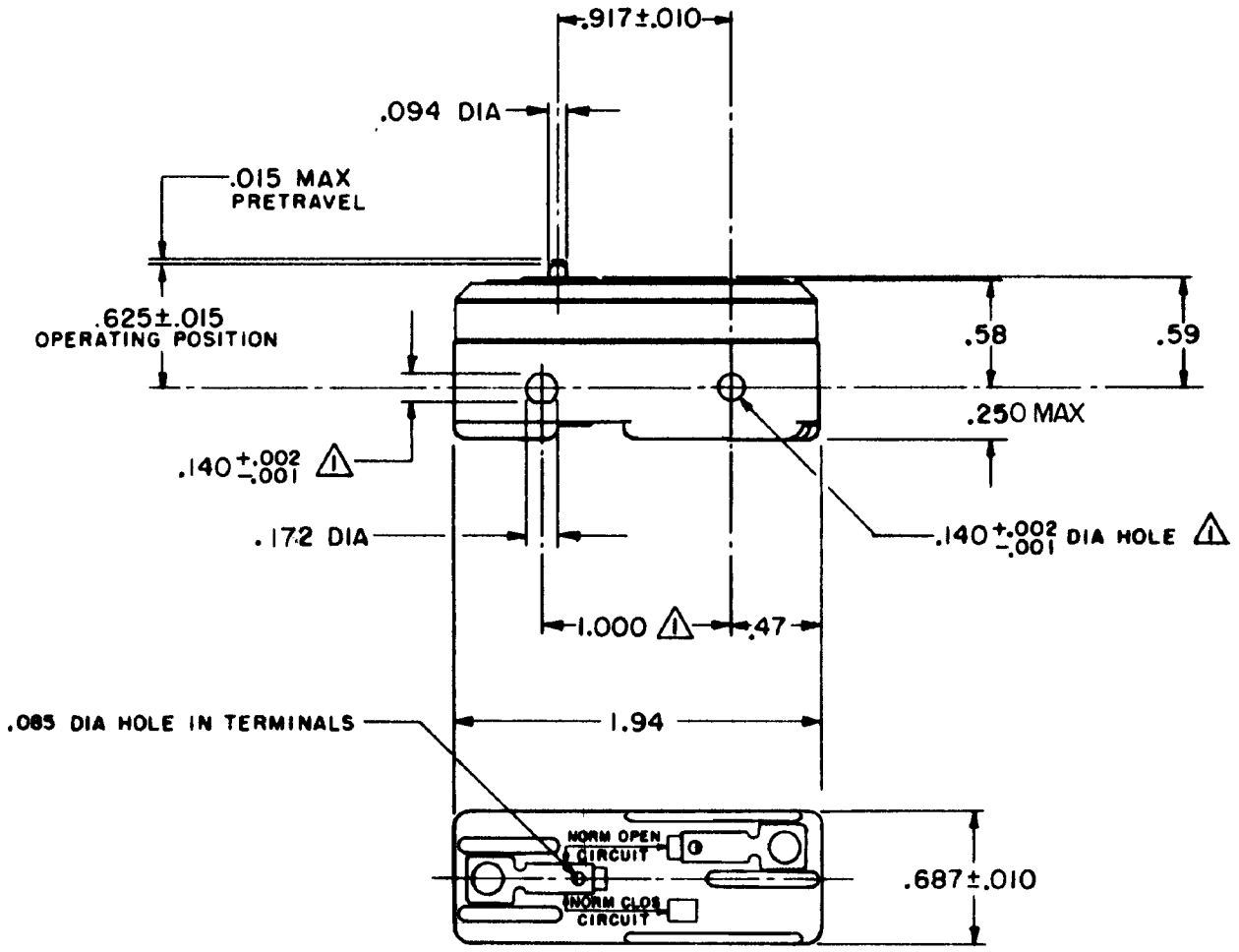

NOTE
⚠ MOUNTING HOLES WILL ACCEPT PINS OR SCREWS OF .139 MAX DIA ON 1.000±.002 CENTERS

THIS DRAWING COVERS A PROPRIETARY ITEM AND IS THE PROPERTY OF MICRO SWITCH, A DIVISION OF MINNEAPOLIS-HONEYWELL REGULATOR CO. THIS DRAWING IS NOT TO BE COPIED OR USED WITHOUT THE APPROVAL OF MICRO SWITCH.

CHARACTERISTICS

OPERATING FORCE	9-13 OZ
RELEASE FORCE	4 OZ MIN
DIFFERENTIAL TRAVEL	.0004-.0020
OVERTRAVEL	.005 MIN

ELECTRICAL DATA

CONTACT ARRANGEMENT
S P N O

-L96- 15 A-125, 250, OR 480 VAC
1/2 A-125 VDC; 1/4 A-250 VDC
1/8 HP-125 VAC, 1/4 HP-250 VAC

-L288-
-L306-
-L315-

16A 250V ∿ T85 5E4

SCALE –
DO NOT SCALE PRINT

UNLESS OTHERWISE SPECIFIED
DIMENSIONS ARE IN INCHES
TOLERANCES ARE:

ONE PLACE	(.0)	±.030
TWO PLACE	(.00)	±.015
THREE PLACE	(.000)	±.005
ANGLES		± -

WEIGHT .050 LB

YZ-2R
PAGE 1 OF 1
M
DRAWING NUMBER
ISSUE 15
REPLACES
RELEASE NO.
13MAY08
ASD
CHECK
21MAR06
AS
CHECK
26 MAR 69
LSD
CHECK
22 MAR 63
GCH
DRAWN
RASTER
FO-50378

REVISIONS

E	CO-84594A KAG 12MAY87	
F	C093346 DLT 22 SEP 98	21MAR06
G	CO-94212-K DLT 5 NOV 99	AS
H	0020237 SK 21MAR06	CHECK
J	PK 13MAY08	
	0039796	

Downloaded from Arrow.com.