Overview

The T496 High Reliability Series (HRA) with a built-in fuse design, provides excellent protection from short circuit conditions in applications where damaging high fault currents exist.

The T496 HRA meets the MIL-PRF-55365 requirements and is suitable for use in high reliability applications, incorporating an intensive testing and screening protocol that is customizable depending on specific customer requirements. The T496 HRA is available in standard and low ESR.

Benefits

- Meets or exceeds EIA standard 535BAACC
- Patented fuse assembly, which protects against short circuit mode
- DLA Drawing 04053 available*
- Established Reliability Weibull Options B, C, or D
- 100% surge current testing options per MIL–PRF–55365 available
- Fuse actuation, 25°C: within 1 second at fault currents of 4 amps and higher
- Continuous current capability of 0.75 amps
- Post actuation resistance, 25°C: 10 MΩ, minimum
- Test tabs on side of case bypass of the capacitor element to allow direct testing of the fuse assembly
- Standard termination SnPb
- MSL Level 1

** Defense Logistics Agency (DLA), previously identified as DSCC*

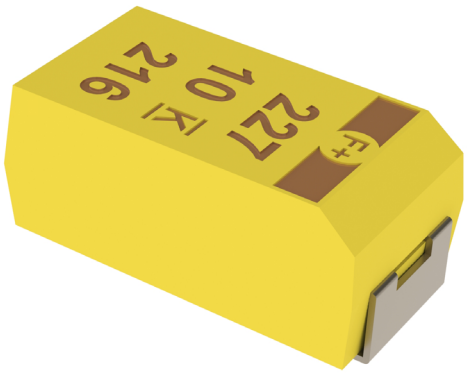

Applications

Typical applications include decoupling and filtering in computing, telecommunications, defense, and industrial end applications requiring built-in fuse capability.

Environmental Compliance

RoHS compliant when ordered with 100% Sn solder.
- Halogen-free
- Epoxy compliant with UL94 V-0
- Molded Epoxy complies for outgassing testing under ASTM E 595.

Downloaded from Arrow.com.

K-SIM

For a detailed analysis of specific part numbers, please visit ksim3.kemet.com to access KEMET's K-SIM software. KEMET K-SIM is designed to simulate behavior of components with respect to frequency, ambient temperature, and DC bias levels.

Ordering Information

T	496	X	227	M	010	B	T	61	10	
Capacitor Class	Series	Case Size	Capacitance Code (pF)	Capacitance Tolerance	Rated Voltage (VDC)	Failure Rate/ Design	Termination Finish	Added Surge Current Options	ESR	Packaging (C-Spec)
T = Tantalum	Fail safe	B C D X	First two digits represent significant figures. Third digit specifies number of zeros.	K = ±10% M = ±20%	004 = 4 006 = 6.3 010 = 10 016 = 16 020 = 20 025 = 25 035 = 35 050 = 50	B = 0.1%/ 1,000 hours C = 0.01%/ 1,000 hours D = 0.001%/ 1,000 hours A = Non-Weibull graded	T = 100% Matte tin (Sn)-plated H = Standard solder coated (SnPb 5% Pb minimum) C = Hot solder dipped K = Solder fused	61 = No additional surge current testing 62 = 10 cycles, 25°C±5°C,after Weibull 63 = 10 cycles -55°C±5°C and 85°C±5°C, after Weibull 64 = 10 cycles -55°C±5°C and 85°C±5°C, before Weibull	10 = Standard 20 = Low	Blank = 7" reel 7280 = 13" reel 7610 = Bulk Bag 7640 = Bulk plastic box WAFL = Waffle pack

Ordering Information DLA Drawing 04053

04053-	001	B
Drawing Number	Dash Number	Reliability Grade
	See Part Number List	B = 0.1%/1,000 hours C = 0.01%/1,000 hours D = 0.001%/1,000 hours Z = Non-Weibull graded

Performance Characteristics

Item	Performance Characteristics
Operating Temperature	−55°C to 125°C
Rated Capacitance Range	0.15 – 470 µF at 120 Hz/25°C
Capacitance Tolerance	K tolerance (10%), M tolerance (20%)
Rated Voltage Range	4 – 50 V
DF (120 Hz)	Refer to Part Number Electrical Specification Table
ESR (100 kHz)	Refer to Part Number Electrical Specification Table
Leakage Current	≤ 0.01 CV (µA) at rated voltage after 5 minutes

Downloaded from Arrow.com.

Qualification

Test	Condition		Characteristics			
Endurance	85°C at rated voltage, 2,000 hours 125°C at 2/3 rated voltage, 2,000 hours		Δ C/C	Within ±10% of initial value		
			DF	Within initial limits		
			DCL	Within 1.25 x initial limit		
			ESR	Within initial limits		
Moisture Resistance	65°C to −10°C, 100% RH, 20 cycles, no load		Δ C/C	Within +/−15% of initial value		
			DF	Within 150 x initial limit		
			DCL	Within 200 x initial limit		
Thermal Shock	MIL–STD–202, Method 107, Condition B, mounted, −55°C to 125°C, 1,000 cycles		Δ C/C	Within ±5% of initial value		
			DF	Within initial limits		
			DCL	Within 1.25 x initial limit		
			ESR	Within initial limits		
Temperature Stability	Extreme temperature exposure at a succession of continuous steps at +25°C, −55°C, +25°C, +85°C, +125°C, +25°C		+25°C	−55°C	+85°C	+125°C
		Δ C/C	IL*	±10%	±10%	±20%
		DF	IL	IL	1.5 x IL	1.5 x IL
		DCL	IL	N/A	10 x IL	12 x IL
Resistance to Solder Heat	MIL–STD–202, Method 210, 1 cycle		Δ C/C	Within ±5% of initial value		
			DF	Within initial limits		
			DCL	Within initial limits		
Surge Voltage	25°C and 85°C, 1.32 x rated voltage 1,000 cycles (125°C, 1.2 x rated voltage)		Δ C/C	Within ±5% of initial value		
			DF	Within initial limits		
			DCL	Within initial limits		
			ESR	Within initial limits		
Resistance to Solvents	MIL–STD–202, Method 215, Aqueous wash chemical or equivalent		Δ C/C	Within ±10 of initial value		
			DF	Within initial limits		
			DCL	Within initial limits		
Mechanical Shock/ Vibration	MIL–STD–202, Method 213, Condition I, 100 G peak MIL–STD–202, Method 204, Condition D, 10 Hz to 2,000 Hz, 20 G peak		Δ C/C	Within ±10% of initial value		
			DF	Within initial limits		
			DCL	Within initial limits		

**IL = Initial limit*

Certification

MIL–PRF–55365/8
DLA Drawing 04053

Downloaded from Arrow.com.

Electrical Characteristics

ESR vs. Frequency

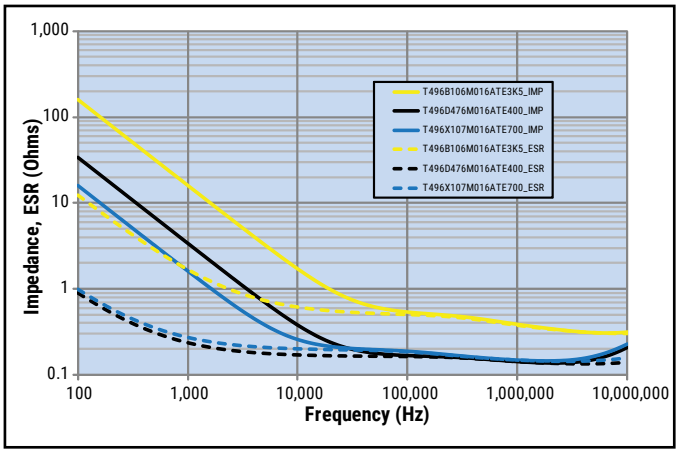

Capacitance vs. Frequency

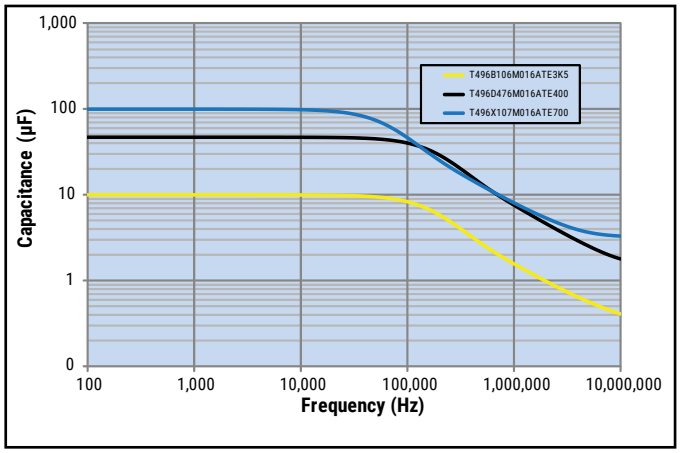

Dimensions – Millimeters (Inches)

Metric will govern

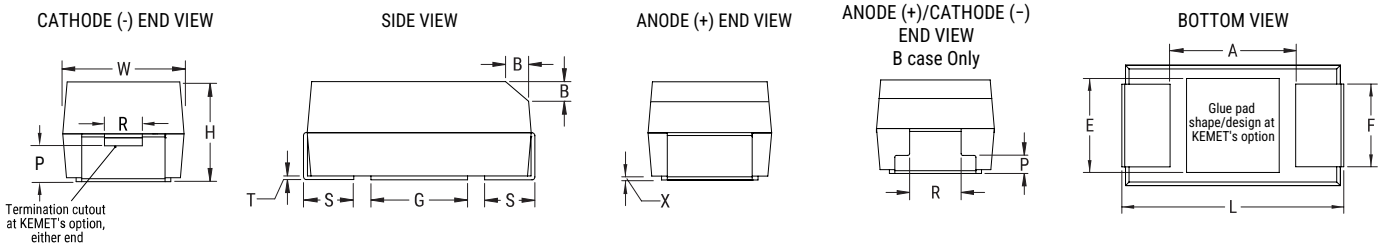

Case Size		Component												
KEMET	EIA	L	W	H	F ±0.1 ±(0.004)	S ±0.3 ±(0.012)	B ±0.15 (Ref) ±0.006	X (Ref)	P (Ref)	R (Ref)	T (Ref)	A (Min)	G (Ref)	E (Ref)
B	3528–21	3.5±0.2 (0.138±0.008)	2.8±0.2 (0.110±0.008)	1.9±0.2 (0.075±0.008)	2.2 (0.087)	0.8 (0.031)	0.4 (0.016)	0.10±0.10 (0.004±0.004)	0.4 (0.016)	1.5 (0.059)	0.13 (0.005)	1.9 (0.075)	1.8 (0.071)	2.2 (0.087)
C	6032–28	6.0±0.3 (0.236±0.012)	3.2±0.3 (0.126±0.012)	2.5±0.3 (0.098±0.012)	2.2 (0.087)	1.3 (0.051)	0.5 (0.020)	0.10±0.10 (0.004±0.004)	0.9 (0.035)	1.0 (0.039)	0.13 (0.005)	3.1 (0.122)	2.8 (0.110)	2.4 (0.094)
D	7343–31	7.3±0.3 (0.287±0.012)	4.3±0.3 (0.169±0.012)	2.8±0.3 (0.110±0.012)	2.4 (0.094)	1.3 (0.051)	0.5 (0.020)	0.10±0.10 (0.004±0.004)	0.9 (0.035)	1.0 (0.039)	0.13 (0.005)	3.8 (0.150)	3.5 (0.138)	3.5 (0.138)
X	7343–43	7.3±0.3 (0.287±0.012)	4.0±0.3 (0.169±0.012)	4.0±0.3 (0.157±0.012)	2.4 (0.094)	1.3 (0.051)	0.5 (0.020)	0.10±0.10 (0.004±0.004)	1.7 (0.067)	1.0 (0.039)	0.13 (0.005)	3.8 (0.150)	3.5 (0.138)	3.5 (0.138)

Notes: (Ref) – Dimensions provided for reference only.

Weight

Case Size/EIA	Typical Weight (mg)
B/3528	107.45
C/6032	224.48
D/7343	446.84
X/7343	652.04

These weights are provided as reference. If exact weights are needed, please contact your KEMET Sales Representative

Downloaded from Arrow.com.

Table 1 – Ratings & Part Number Reference

Rated Voltage	Rated Cap	Case Code/ Case Size	KEMET Part Number	DLA (DSCC)	DC Leakage	DF	ESR	Ripple Current (mArms)	Maximum Operating Temp.
VDC at 85°C	µF	KEMET/EIA	(See below for part options)	Drawing Number	µA at +25°C Maximum/ 5 Minutes	% at +25°C 120 Hz Maximum	mΩ at +25°C 100 kHz Maximum	100kHz, 25 °C	°C
4	68	C/6032-28	T496C686(1)004(2)(3)(4)10	N/A	2.7	6.0	1,600	262	125
4	68	C/6032-28	T496C686(1)004(2)(3)(4)20	N/A	2.7	6.0	400	524	125
4	68	C/6032-28	T496C686M004(2)H4095	04053-001(2)	2.7	6.0	1,600	262	125
4	100	C/6032-28	T496C107(1)004(2)(3)(4)10	N/A	4.0	8.0	1,200	303	125
4	100	C/6032-28	T496C107M004(2)H4095	04053-002(2)	4.0	8.0	1,200	303	125
4	150	D/7343-31	T496D157(1)004(2)(3)(4)10	N/A	6.0	8.0	800	433	125
4	150	D/7343-31	T496D157M004(2)H4095	04053-003(2)	6.0	8.0	800	433	125
4	150	C/6032-28	T496C157(1)004(2)(3)(4)10	N/A	6.0	8.0	1,200	303	125
4	220	D/7343-31	T496D227(1)004(2)(3)(4)10	N/A	8.8	8.0	700	463	125
4	220	D/7343-31	T496D227(1)004(2)(3)(4)20	N/A	8.8	8.0	400	612	125
4	220	D/7343-31	T496D227M004(2)H4095	04053-004(2)	8.8	8.0	700	463	125
4	330	D/7343-31	T496D337(1)004(2)(3)(4)10	N/A	13.2	8.0	700	463	125
4	330	D/7343-31	T496D337(1)004(2)(3)(4)20	N/A	13.2	8.0	400	612	125
4	330	D/7343-31	T496D337M004(2)H4095	04053-005(2)	13.2	8.0	700	463	125
4	330	X/7343-43	T496X337(1)004(2)(3)(4)10	N/A	13.2	8.0	700	485	125
4	330	X/7343-43	T496X337M004(2)H4095	04053-006(2)	13.2	8.0	700	485	125
4	470	X/7343-43	T496X477(1)004(2)(3)(4)10	N/A	18.8	8.0	500	574	125
4	470	X/7343-43	T496X477M004(2)H4095	04053-007(2)	18.8	8.0	500	574	125
6.3	4.7	B/3528-21	T496B475(1)006(2)(3)(4)10	N/A	0.3	6.0	3,500	156	125
6.3	4.7	B/3528-21	T496B475M006(2)H4095	04053-008(2)	0.3	6.0	3,500	156	125
6.3	6.8	B/3528-21	T496B685(1)006(2)(3)(4)10	N/A	0.4	6.0	3,500	156	125
6.3	6.8	B/3528-21	T496B685M006(2)H4095	04053-009(2)	0.4	6.0	3,500	156	125
6.3	10	B/3528-21	T496B106(1)006(2)(3)(4)10	N/A	0.6	6.0	3,500	156	125
6.3	10	B/3528-21	T496B106M006(2)H4095	04053-010(2)	0.6	6.0	3,500	156	125
6.3	15	C/6032-28	T496C156(1)006(2)(3)(4)10	N/A	0.9	6.0	2,000	235	125
6.3	15	C/6032-28	T496C156M006(2)H4095	04053-011(2)	0.9	6.0	2,000	235	125
6.3	22	B/3528-21	T496B226(1)006(2)(3)(4)10	N/A	1.4	6.0	3,500	156	125
6.3	22	B/3528-21	T496B226(1)006(2)(3)(4)20	N/A	1.4	6.0	1,500	238	125
6.3	22	B/3528-21	T496B226M006(2)H4095	04053-012(2)	1.4	6.0	3,500	156	125
6.3	22	C/6032-28	T496C226(1)006(2)(3)(4)10	N/A	1.4	6.0	2,000	235	125
6.3	22	C/6032-28	T496C226M006(2)H4095	04053-013(2)	1.4	6.0	2,000	235	125
6.3	33	C/6032-28	T496C336(1)006(2)(3)(4)10	N/A	2.1	6.0	2,000	235	125
6.3	33	C/6032-28	T496C336(1)006(2)(3)(4)20	N/A	2.1	6.0	600	428	125
6.3	33	C/6032-28	T496C336M006(2)H4095	04053-014(2)	2.1	6.0	2,000	235	125
6.3	47	C/6032-28	T496C476(1)006(2)(3)(4)10	N/A	3.0	6.0	1,600	262	125
6.3	47	C/6032-28	T496C476(1)006(2)(3)(4)20	N/A	3.0	6.0	600	428	125
6.3	47	C/6032-28	T496C476M006(2)H4095	04053-016(2)	3.0	6.0	1,600	262	125
6.3	47	D/7343-31	T496D476(1)006(2)(3)(4)10	N/A	3.0	6.0	1,000	387	125
6.3	47	D/7343-31	T496D476M006(2)H4095	04053-015(2)	3.0	6.0	1,000	387	125
6.3	68	C/6032-28	T496C686(1)006(2)(3)(4)10	N/A	4.3	6.0	1,200	303	125
6.3	68	C/6032-28	T496C686M006(2)H4095	04053-018(2)	4.3	6.0	1,200	303	125
6.3	68	D/7343-31	T496D686(1)006(2)(3)(4)10	N/A	4.3	6.0	1,000	387	125
6.3	68	D/7343-31	T496D686M006(2)H4095	04053-017(2)	4.3	6.0	1,000	387	125
6.3	100	X/7343-43	T496X107(1)006(2)(3)(4)10	N/A	6.3	8.0	900	428	125
6.3	100	X/7343-43	T496X107(1)006(2)(3)(4)20	N/A	6.3	8.0	300	742	125
6.3	100	X/7343-43	T496X107M006(2)H4095	04053-019(2)	6.3	8.0	300	742	125
6.3	100	D/7343-31	T496D107(1)006(2)(3)(4)10	N/A	6.3	8.0	800	433	125
VDC at 85°C	µF	KEMET/EIA	(See below for part options)	Drawing Number	µA at +25°C Maximum/ 5 Minutes	% at +25°C 120 Hz Maximum	mΩ at +25°C 100 kHz Maximum	100kHz, 25 °C	°C
Rated Voltage	Rated Cap	Case Code/ Case Size	KEMET Part Number	DLA (DLA)	DC Leakage	DF	ESR	Ripple Current (mArms)	Maximum Operating Temp.

(1) To complete KEMET part number, insert M for ±20% or K for ±10%. Designates Capacitance tolerance.
(2) To complete KEMET part number, insert B (0.1%/1,000 hours), C (0.01%/1,000 hours), D (0.001%/1,000 hours), or A (Non-Weibull Graded). To complete DLA part number insert B (0.1%/1,000 hours), C (0.01%/1,000 hours), D (0.001%/1,000 hours), or Z (Non-Weibull Graded)
(3) To complete KEMET part number, insert C = Hot Solder Dipped, H = Solder-plated, K = Solder Fused, or T = 100% Tin (Sn). Designates Termination Finish.
(4) To complete KEMET part number, insert 61, 62, 63 or 64; N/A for DLA (DSCC) 04053 product - 4095 applies.

Downloaded from Arrow.com.

Table 1 – Ratings & Part Number Reference cont.

Rated Voltage	Rated Cap	Case Code/ Case Size	KEMET Part Number	DLA (DSCC)	DC Leakage	DF	ESR	Ripple Current (mArms)	Maximum Operating Temp.
VDC at 85°C	µF	KEMET/EIA	(See below for part options)	Drawing Number	µA at +25°C Maximum/ 5 Minutes	% at +25°C 120 Hz Maximum	mΩ at +25°C 100 kHz Maximum	100kHz, 25 °C	°C
6.3	100	D/7343-31	T496D107(1)006(2)(3)(4)20	N/A	6.3	8.0	400	612	125
6.3	100	D/7343-31	T496D107M006(2)H4095	04053-020(2)	6.3	8.0	800	433	125
6.3	100	C/6032-28	T496C107(1)006(2)(3)(4)10	N/A	6.3	8.0	400	524	125
6.3	150	D/7343-31	T496D157(1)006(2)(3)(4)10	N/A	9.5	8.0	700	463	125
6.3	150	D/7343-31	T496D157(1)006(2)(3)(4)20	N/A	9.5	8.0	300	707	125
6.3	150	D/7343-31	T496D157M006(2)H4095	04053-021(2)	9.5	8.0	700	463	125
6.3	150	X/7343-43	T496X157(1)006(2)(3)(4)10	N/A	9.5	8.0	300	742	125
6.3	220	X/7343-43	T496X227(1)006(2)(3)(4)10	N/A	13.9	8.0	700	485	125
6.3	220	X/7343-43	T496X227(1)006(2)(3)(4)20	N/A	13.9	8.0	300	742	125
6.3	220	X/7343-43	T496X227M006(2)H4095	04053-023(2)	13.9	8.0	700	485	125
6.3	220	D/7343-31	T496D227(1)006(2)(3)(4)10	N/A	13.9	8.0	700	463	125
6.3	220	D/7343-31	T496D227(1)006(2)(3)(4)20	N/A	13.9	8.0	300	707	125
6.3	220	D/7343-31	T496D227M006(2)H4095	04053-022(2)	13.9	8.0	700	463	125
6.3	330	X/7343-43	T496X337(1)006(2)(3)(4)10	N/A	20.8	8.0	500	574	125
6.3	330	X/7343-43	T496X337(1)006(2)(3)(4)20	N/A	20.8	8.0	300	742	125
6.3	330	X/7343-43	T496X337M006(2)H4095	04053-024(2)	20.8	8.0	500	574	125
10	3.3	B/3528-21	T496B335(1)010(2)(3)(4)10	N/A	0.3	6.0	3,500	156	125
10	3.3	B/3528-21	T496B335M010(2)H4095	04053-025(2)	0.3	6.0	3,500	156	125
10	4.7	B/3528-21	T496B475(1)010(2)(3)(4)10	N/A	0.5	6.0	3,500	156	125
10	4.7	B/3528-21	T496B475M010(2)H4095	04053-026(2)	0.5	6.0	3,500	156	125
10	6.8	B/3528-21	T496B685(1)010(2)(3)(4)10	N/A	0.7	6.0	3,500	156	125
10	6.8	B/3528-21	T496B685M010(2)H4095	04053-027(2)	0.7	6.0	3,500	156	125
10	10	C/6032-28	T496C106(1)010(2)(3)(4)10	N/A	1.0	6.0	2,000	235	125
10	10	C/6032-28	T496C106M010(2)H4095	04053-028(2)	1.0	6.0	2,000	235	125
10	15	B/3528-21	T496B156(1)010(2)(3)(4)10	N/A	1.5	6.0	3,500	156	125
10	15	B/3528-21	T496B156M010(2)H4095	04053-029(2)	1.5	6.0	3,500	156	125
10	15	C/6032-28	T496C156(1)010(2)(3)(4)10	N/A	1.5	6.0	2,000	235	125
10	15	C/6032-28	T496C156(1)010(2)(3)(4)20	N/A	1.5	6.0	600	428	125
10	15	C/6032-28	T496C156M010(2)H4095	04053-030(2)	1.5	6.0	2,000	235	125
10	22	C/6032-28	T496C226(1)010(2)(3)(4)10	N/A	2.2	6.0	2,000	235	125
10	22	C/6032-28	T496C226(1)010(2)(3)(4)20	N/A	2.2	6.0	500	469	125
10	22	C/6032-28	T496C226M010(2)H4095	04053-031(2)	2.2	6.0	2,000	235	125
10	33	D/7343-31	T496D336(1)010(2)(3)(4)10	N/A	3.3	6.0	1,000	387	125
10	33	D/7343-31	T496D336(1)010(2)(3)(4)20	N/A	3.3	6.0	400	612	125
10	33	D/7343-31	T496D336M010(2)H4095	04053-032(2)	3.3	6.0	1,000	387	125
10	33	C/6032-28	T496C336(1)010(2)(3)(4)10	N/A	3.3	6.0	1,600	262	125
10	33	C/6032-28	T496C336(1)010(2)(3)(4)20	N/A	3.3	6.0	400	524	125
10	33	C/6032-28	T496C336M010(2)H4095	04053-033(2)	3.3	6.0	1,600	262	125
10	47	D/7343-31	T496D476(1)010(2)(3)(4)10	N/A	4.7	6.0	1,000	387	125
10	47	D/7343-31	T496D476(1)010(2)(3)(4)20	N/A	4.7	6.0	400	612	125
10	47	D/7343-31	T496D476M010(2)H4095	04053-034(2)	4.7	6.0	1,000	387	125
10	47	C/6032-28	T496C476(1)010(2)(3)(4)10	N/A	4.7	6.0	1,200	303	125
10	47	C/6032-28	T496C476(1)010(2)(3)(4)20	N/A	4.7	6.0	400	524	125
10	47	C/6032-28	T496C476M010(2)H4095	04053-035(2)	4.7	6.0	1,200	303	125
10	68	X/7343-43	T496X686(1)010(2)(3)(4)10	N/A	6.8	6.0	900	428	125
10	68	X/7343-43	T496X686M010(2)H4095	04053-036(2)	6.8	6.0	900	428	125
10	68	D/7343-31	T496D686(1)010(2)(3)(4)10	N/A	6.8	6.0	800	433	125
VDC at 85°C	µF	KEMET/EIA	(See below for part options)	Drawing Number	µA at +25°C Maximum/ 5 Minutes	% at +25°C 120 Hz Maximum	mΩ at +25°C 100 kHz Maximum	100kHz, 25 °C	°C
Rated Voltage	**Rated Cap**	**Case Code/ Case Size**	**KEMET Part Number**	**DLA (DLA)**	**DC Leakage**	**DF**	**ESR**	**Ripple Current (mArms)**	**Maximum Operating Temp.**

(1) To complete KEMET part number, insert M for ±20% or K for ±10%. Designates Capacitance tolerance.
(2) To complete KEMET part number, insert B (0.1%/1,000 hours), C (0.01%/1,000 hours), D (0.001%/1,000 hours), or A (Non-Weibull Graded). To complete DLA part number insert B (0.1%/1,000 hours), C (0.01%/1,000 hours), D (0.001%/1,000 hours), or Z (Non-Weibull Graded)
(3) To complete KEMET part number, insert C = Hot Solder Dipped, H = Solder-plated, K = Solder Fused, or T = 100% Tin (Sn). Designates Termination Finish.
(4) To complete KEMET part number, insert 61 = No Surge, 62 = 10 cycles Surge +25°C, 63 = 10 cycles Surge −55°C and +85°C after Weibull or 64 = 10 cycles Surge −55°C and +85°C before Weibull; N/A for DLA (DSCC) 04053 product - 4095 applies.

Downloaded from Arrow.com.

Table 1 – Ratings & Part Number Reference cont.

Rated Voltage	Rated Cap	Case Code/ Case Size	KEMET Part Number	DLA (DSCC)	DC Leakage	DF	ESR	Ripple Current (mArms)	Maximum Operating Temp.
VDC at 85°C	µF	KEMET/EIA	(See below for part options)	Drawing Number	µA at +25°C Maximum/ 5 Minutes	% at +25°C 120 Hz Maximum	mΩ at +25°C 100 kHz Maximum	100kHz, 25 °C	°C
10	68	D/7343-31	T496D686(1)010(2)(3)(4)20	N/A	6.8	6.0	400	612	125
10	68	D/7343-31	T496D686M010(2)H4095	04053-037(2)	6.8	6.0	800	433	125
10	100	X/7343-43	T496X107(1)010(2)(3)(4)10	N/A	10.0	8.0	400	642	125
10	100	D/7343-31	T496D107(1)010(2)(3)(4)10	N/A	10.0	8.0	700	463	125
10	100	D/7343-31	T496D107(1)010(2)(3)(4)20	N/A	10.0	8.0	400	612	125
10	100	D/7343-31	T496D107M010(2)H4095	04053-038(2)	10.0	8.0	700	463	125
10	150	X/7343-43	T496X157(1)010(2)(3)(4)10	N/A	15.0	8.0	700	485	125
10	150	X/7343-43	T496X157(1)010(2)(3)(4)20	N/A	15.0	8.0	400	642	125
10	150	X/7343-43	T496X157M010(2)H4095	04053-039(2)	15.0	8.0	700	485	125
10	150	D/7343-31	T496D157(1)010(2)(3)(4)10	N/A	15.0	8.0	700	463	125
10	150	D/7343-31	T496D157(1)010(2)(3)(4)20	N/A	15.0	8.0	400	612	125
10	150	D/7343-31	T496D157M010(2)H4095	04053-040(2)	15.0	8.0	700	463	125
10	220	X/7343-43	T496X227(1)010(2)(3)(4)10	N/A	22.0	8.0	500	574	125
10	220	X/7343-43	T496X227(1)010(2)(3)(4)20	N/A	22.0	8.0	300	742	125
10	220	X/7343-43	T496X227M010(2)H4095	04053-041(2)	22.0	8.0	500	574	125
10	220	D/7343-31	T496D227(1)010(2)(3)(4)10	N/A	22.0	8.0	300	707	125
16	2.2	B/3528-21	T496B225(1)016(2)(3)(4)10	N/A	0.4	6.0	3,500	156	125
16	2.2	B/3528-21	T496B225M016(2)H4095	04053-042(2)	0.4	6.0	3,500	156	125
16	3.3	B/3528-21	T496B335(1)016(2)(3)(4)10	N/A	0.5	6.0	3,500	156	125
16	3.3	B/3528-21	T496B335(1)016(2)(3)(4)20	N/A	0.5	6.0	2,100	201	125
16	3.3	B/3528-21	T496B335M016(2)H4095	04053-043(2)	0.5	6.0	3,500	156	125
16	4.7	B/3528-21	T496B475(1)016(2)(3)(4)10	N/A	0.8	6.0	3,500	156	125
16	4.7	B/3528-21	T496B475(1)016(2)(3)(4)20	N/A	0.8	6.0	1,600	230	125
16	4.7	B/3528-21	T496B475M016(2)H4095	04053-044(2)	0.8	6.0	3,500	156	125
16	6.8	C/6032-28	T496C685(1)016(2)(3)(4)10	N/A	1.1	6.0	2,000	235	125
16	6.8	C/6032-28	T496C685(1)016(2)(3)(4)20	N/A	1.1	6.0	600	428	125
16	6.8	C/6032-28	T496C685M016(2)H4095	04053-045(2)	1.1	6.0	2,000	235	125
16	10	B/3528-21	T496B106(1)016(2)(3)(4)10	N/A	1.6	6.0	3,500	156	125
16	10	B/3528-21	T496B106M016(2)H4095	04053-046(2)	1.6	6.0	3,500	156	125
16	10	C/6032-28	T496C106(1)016(2)(3)(4)10	N/A	1.6	6.0	2,000	235	125
16	10	C/6032-28	T496C106(1)016(2)(3)(4)20	N/A	1.6	6.0	700	396	125
16	10	C/6032-28	T496C106M016(2)H4095	04053-047(2)	1.6	6.0	2,000	235	125
16	15	C/6032-28	T496C156(1)016(2)(3)(4)10	N/A	2.4	6.0	2,000	235	125
16	15	C/6032-28	T496C156(1)016(2)(3)(4)20	N/A	2.4	6.0	600	428	125
16	15	C/6032-28	T496C156M016(2)H4095	04053-048(2)	2.4	6.0	2,000	235	125
16	22	D/7343-31	T496D226(1)016(2)(3)(4)10	N/A	3.5	6.0	1,000	387	125
16	22	D/7343-31	T496D226(1)016(2)(3)(4)20	N/A	3.5	6.0	500	547	125
16	22	D/7343-31	T496D226M016(2)H4095	04053-049(2)	3.5	6.0	1,000	387	125
16	22	C/6032-28	T496C226(1)016(2)(3)(4)10	N/A	3.5	6.0	1,600	262	125
16	22	C/6032-28	T496C226(1)016(2)(3)(4)20	N/A	3.5	6.0	1,000	332	125
16	22	C/6032-28	T496C226M016(2)H4095	04053-050(2)	3.5	6.0	1,600	262	125
16	33	D/7343-31	T496D336(1)016(2)(3)(4)10	N/A	5.3	6.0	1,000	387	125
16	33	D/7343-31	T496D336(1)016(2)(3)(4)20	N/A	5.3	6.0	400	612	125
16	33	D/7343-31	T496D336M016(2)H4095	04053-051(2)	5.3	6.0	1,000	387	125
16	47	X/7343-43	T496X476(1)016(2)(3)(4)10	N/A	7.5	6.0	900	428	125
16	47	X/7343-43	T496X476(1)016(2)(3)(4)20	N/A	7.5	6.0	400	642	125
16	47	X/7343-43	T496X476M016(2)H4095	04053-052(2)	7.5	6.0	900	428	125
VDC at 85°C	µF	KEMET/EIA	(See below for part options)	Drawing Number	µA at +25°C Maximum/ 5 Minutes	% at +25°C 120 Hz Maximum	mΩ at +25°C 100 kHz Maximum	100kHz, 25 °C	°C
Rated Voltage	**Rated Cap**	**Case Code/ Case Size**	**KEMET Part Number**	**DLA (DLA)**	**DC Leakage**	**DF**	**ESR**	**Ripple Current (mArms)**	**Maximum Operating Temp.**

(1) To complete KEMET part number, insert M for ±20% or K for ±10%. Designates Capacitance tolerance.
(2) To complete KEMET part number, insert B (0.1%/1,000 hours), C (0.01%/1,000 hours), D (0.001%/1,000 hours), or A (Non-Weibull Graded). To complete DLA part number insert B (0.1%/1,000 hours), C (0.01%/1,000 hours), D (0.001%/1,000 hours), or Z (Non-Weibull Graded)
(3) To complete KEMET part number, insert C = Hot Solder Dipped, H = Solder-plated, K = Solder Fused, or T = 100% Tin (Sn). Designates Termination Finish.
(4) To complete KEMET part number, insert 61 = No Surge, 62 = 10 cycles Surge +25°C, 63 = 10 cycles Surge −55°C and +85°C after Weibull or 64 = 10 cycles Surge −55°C and +85°C before Weibull; N/A for DLA (DSCC) 04053 product - 4095 applies.

Downloaded from Arrow.com.

Table 1 – Ratings & Part Number Reference cont.

Rated Voltage	Rated Cap	Case Code/ Case Size	KEMET Part Number	DLA (DSCC)	DC Leakage	DF	ESR	Ripple Current (mArms)	Maximum Operating Temp.
VDC at 85°C	µF	KEMET/EIA	(See below for part options)	Drawing Number	µA at +25°C Maximum/ 5 Minutes	% at +25°C 120 Hz Maximum	mΩ at +25°C 100 kHz Maximum	100kHz, 25 °C	°C
16	47	D/7343-31	T496D476(1)016(2)(3)(4)10	N/A	7.5	6.0	800	433	125
16	47	D/7343-31	T496D476(1)016(2)(3)(4)20	N/A	7.5	6.0	400	612	125
16	47	D/7343-31	T496D476M016(2)H4095	04053-053(2)	7.5	6.0	800	433	125
16	68	D/7343-31	T496D686(1)016(2)(3)(4)10	N/A	10.9	8.0	400	612	125
16	100	X/7343-43	T496X107(1)016(2)(3)(4)10	N/A	16.0	8.0	700	485	125
16	100	X/7343-43	T496X107M016(2)H4095	04053-054(2)	16.0	8.0	700	485	125
20	1.5	B/3528-21	T496B155(1)020(2)(3)(4)10	N/A	0.3	6.0	5,000	130	125
20	1.5	B/3528-21	T496B155M020(2)H4095	04053-055(2)	0.3	6.0	5,000	130	125
20	2.2	B/3528-21	T496B225(1)020(2)(3)(4)10	N/A	0.4	6.0	3,500	156	125
20	2.2	B/3528-21	T496B225(1)020(2)(3)(4)20	N/A	0.4	6.0	1,600	230	125
20	2.2	B/3528-21	T496B225M020(2)H4095	04053-056(2)	0.4	6.0	3,500	156	125
20	3.3	B/3528-21	T496B335(1)020(2)(3)(4)10	N/A	0.7	6.0	3,500	156	125
20	3.3	B/3528-21	T496B335M020(2)H4095	04053-057(2)	0.7	6.0	3,500	156	125
20	4.7	C/6032-28	T496C475(1)020(2)(3)(4)10	N/A	0.9	6.0	2,000	235	125
20	4.7	C/6032-28	T496C475M020(2)H4095	04053-058(2)	0.9	6.0	2,000	235	125
20	6.8	C/6032-28	T496C685(1)020(2)(3)(4)10	N/A	1.4	6.0	2,000	235	125
20	6.8	C/6032-28	T496C685(1)020(2)(3)(4)20	N/A	1.4	6.0	600	428	125
20	6.8	C/6032-28	T496C685M020(2)H4095	04053-059(2)	1.4	6.0	2,000	235	125
20	10	C/6032-28	T496C106(1)020(2)(3)(4)10	N/A	2.0	6.0	2,000	235	125
20	10	C/6032-28	T496C106(1)020(2)(3)(4)20	N/A	2.0	6.0	800	371	125
20	10	C/6032-28	T496C106M020(2)H4095	04053-060(2)	2.0	6.0	2,000	235	125
20	15	D/7343-31	T496D156(1)020(2)(3)(4)10	N/A	3.0	6.0	1,000	387	125
20	15	D/7343-31	T496D156(1)020(2)(3)(4)20	N/A	3.0	6.0	500	547	125
20	15	D/7343-31	T496D156M020(2)H4095	04053-061(2)	3.0	6.0	1,000	387	125
20	15	C/6032-28	T496C156(1)020(2)(3)(4)10	N/A	3.0	6.0	500	469	125
20	22	D/7343-31	T496D226(1)020(2)(3)(4)10	N/A	4.4	6.0	1,000	387	125
20	22	D/7343-31	T496D226(1)020(2)(3)(4)20	N/A	4.4	6.0	500	547	125
20	22	D/7343-31	T496D226M020(2)H4095	04053-062(2)	4.4	6.0	1,000	387	125
20	33	X/7343-43	T496X336(1)020(2)(3)(4)10	N/A	6.6	6.0	900	428	125
20	33	X/7343-43	T496X336(1)020(2)(3)(4)20	N/A	6.6	6.0	400	642	125
20	33	X/7343-43	T496X336M020(2)H4095	04053-063(2)	6.6	6.0	900	428	125
20	33	D/7343-31	T496D336(1)020(2)(3)(4)10	N/A	6.6	6.0	400	612	125
20	47	X/7343-43	T496X476(1)020(2)(3)(4)10	N/A	9.4	6.0	300	742	125
20	47	X/7343-43	T496X476M020(2)H4095	04053-064(2)	9.4	6.0	300	742	125
20	47	D/7343-31	T496D476(1)020(2)(3)(4)10	N/A	9.4	6.0	300	707	125
25	0.68	B/3528-21	T496B684(1)025(2)(3)(4)10	N/A	0.2	4.0	6,500	114	125
25	0.68	B/3528-21	T496B684M025(2)H4095	04053-065(2)	0.2	4.0	6,500	114	125
25	1	B/3528-21	T496B105(1)025(2)(3)(4)10	N/A	0.3	4.0	5,000	130	125
25	1	B/3528-21	T496B105(1)025(2)(3)(4)20	N/A	0.3	4.0	3,500	156	125
25	1	B/3528-21	T496B105M025(2)H4095	04053-066(2)	0.3	4.0	5,000	130	125
25	1.5	B/3528-21	T496B155(1)025(2)(3)(4)10	N/A	0.4	6.0	5,000	130	125
25	1.5	B/3528-21	T496B155(1)025(2)(3)(4)20	N/A	0.4	6.0	1,600	230	125
25	1.5	B/3528-21	T496B155M025(2)H4095	04053-067(2)	0.4	6.0	5,000	130	125
25	2.2	C/6032-28	T496C225(1)025(2)(3)(4)10	N/A	0.6	6.0	3,500	177	125
25	2.2	C/6032-28	T496C225M025(2)H4095	04053-068(2)	0.6	6.0	3,500	177	125
25	3.3	C/6032-28	T496C335(1)025(2)(3)(4)10	N/A	0.8	6.0	2,500	210	125
25	3.3	C/6032-28	T496C335(1)025(2)(3)(4)20	N/A	0.8	6.0	2,100	229	125
VDC at 85°C	µF	KEMET/EIA	(See below for part options)	Drawing Number	µA at +25°C Maximum/ 5 Minutes	% at +25°C 120 Hz Maximum	mΩ at +25°C 100 kHz Maximum	100kHz, 25 °C	°C
Rated Voltage	Rated Cap	Case Code/ Case Size	KEMET Part Number	DLA (DLA)	DC Leakage	DF	ESR	Ripple Current (mArms)	Maximum Operating Temp.

(1) To complete KEMET part number, insert M for ±20% or K for ±10%. Designates Capacitance tolerance.
(2) To complete KEMET part number, insert B (0.1%/1,000 hours), C (0.01%/1,000 hours), D (0.001%/1,000 hours), or A (Non-Weibull Graded). To complete DLA part number insert B (0.1%/1,000 hours), C (0.01%/1,000 hours), D (0.001%/1,000 hours), or Z (Non-Weibull Graded)
(3) To complete KEMET part number, insert C = Hot Solder Dipped, H = Solder-plated, K = Solder Fused, or T = 100% Tin (Sn). Designates Termination Finish.
(4) To complete KEMET part number, insert 61 = No Surge, 62 = 10 cycles Surge +25°C, 63 = 10 cycles Surge −55°C and +85°C after Weibull or 64 = 10 cycles Surge −55°C and +85°C before Weibull; N/A for DLA (DSCC) 04053 product - 4095 applies.

Downloaded from Arrow.com.

Table 1 – Ratings & Part Number Reference cont.

Rated Voltage	Rated Cap	Case Code/ Case Size	KEMET Part Number	DLA (DSCC)	DC Leakage	DF	ESR	Ripple Current (mArms)	Maximum Operating Temp.
VDC at 85°C	µF	KEMET/EIA	(See below for part options)	Drawing Number	µA at +25°C Maximum/ 5 Minutes	% at +25°C 120 Hz Maximum	mΩ at +25°C 100 kHz Maximum	100kHz, 25 °C	°C
25	3.3	C/6032-28	T496C335M025(2)H4095	04053-069(2)	0.8	6.0	2,500	210	125
25	4.7	B/3528-21	T496B475(1)025(2)(3)(4)10	N/A	1.2	6.0	4,000	146	125
25	4.7	C/6032-28	T496C475(1)025(2)(3)(4)10	N/A	1.2	6.0	2,500	210	125
25	4.7	C/6032-28	T496C475(1)025(2)(3)(4)20	N/A	1.2	6.0	1,300	291	125
25	4.7	C/6032-28	T496C475M025(2)H4095	04053-070(2)	1.2	6.0	2,500	210	125
25	6.8	C/6032-28	T496C685(1)025(2)(3)(4)10	N/A	1.7	6.0	2,000	235	125
25	6.8	C/6032-28	T496C685(1)025(2)(3)(4)20	N/A	1.7	6.0	600	428	125
25	6.8	C/6032-28	T496C685M025(2)H4095	04053-071(2)	1.7	6.0	2,000	235	125
25	10	C/6032-28	T496C106(1)025(2)(3)(4)10	N/A	2.5	6.0	600	428	125
25	10	C/6032-28	T496C106M025(2)H4095	04053-072(2)	2.5	6.0	600	428	125
25	10	D/7343-31	T496D106(1)025(2)(3)(4)10	N/A	2.5	6.0	1,200	354	125
25	10	D/7343-31	T496D106(1)025(2)(3)(4)20	N/A	2.5	6.0	600	500	125
25	10	D/7343-31	T496D106M025(2)H4095	04053-073(2)	2.5	6.0	1,200	354	125
25	15	C/6032-28	T496C156(1)025(2)(3)(4)10	N/A	3.8	6.0	750	383	125
25	15	D/7343-31	T496D156(1)025(2)(3)(4)10	N/A	3.8	6.0	1,000	387	125
25	15	D/7343-31	T496D156(1)025(2)(3)(4)20	N/A	3.8	6.0	500	547	125
25	15	D/7343-31	T496D156M025(2)H4095	04053-074(2)	3.8	6.0	1,000	387	125
25	22	X/7343-43	T496X226(1)025(2)(3)(4)10	N/A	5.5	6.0	900	428	125
25	22	X/7343-43	T496X226(1)025(2)(3)(4)20	N/A	5.5	6.0	400	642	125
25	22	X/7343-43	T496X226M025(2)H4095	04053-075(2)	5.5	6.0	900	428	125
25	22	D/7343-31	T496D226(1)025(2)(3)(4)10	N/A	5.5	6.0	800	433	125
25	22	D/7343-31	T496D226(1)025(2)(3)(4)20	N/A	5.5	6.0	400	612	125
25	22	D/7343-31	T496D226M025(2)H4095	04053-076(2)	5.5	6.0	800	433	125
35	0.47	B/3528-21	T496B474(1)035(2)(3)(4)10	N/A	0.2	4.0	8,000	103	125
35	0.47	B/3528-21	T496B474(1)035(2)(3)(4)20	N/A	0.2	4.0	2,600	181	125
35	0.47	B/3528-21	T496B474M035(2)H4095	04053-077(2)	0.2	4.0	8,000	103	125
35	0.68	B/3528-21	T496B684(1)035(2)(3)(4)10	N/A	0.2	4.0	6,500	114	125
35	0.68	B/3528-21	T496B684M035(2)H4095	04053-078(2)	0.2	4.0	6,500	114	125
35	1	B/3528-21	T496B105(1)035(2)(3)(4)10	N/A	0.4	4.0	5,000	130	125
35	1	B/3528-21	T496B105(1)035(2)(3)(4)20	N/A	0.4	4.0	3,100	166	125
35	1	B/3528-21	T496B105M035(2)H4095	04053-079(2)	0.4	4.0	5,000	130	125
35	1.5	C/6032-28	T496C155(1)035(2)(3)(4)10	N/A	0.5	6.0	4,500	156	125
35	1.5	C/6032-28	T496C155(1)035(2)(3)(4)20	N/A	0.5	6.0	2,600	206	125
35	1.5	C/6032-28	T496C155M035(2)H4095	04053-080(2)	0.5	6.0	4,500	156	125
35	2.2	C/6032-28	T496C225(1)035(2)(3)(4)10	N/A	0.8	6.0	3,500	177	125
35	2.2	C/6032-28	T496C225(1)035(2)(3)(4)20	N/A	0.8	6.0	1,600	262	125
35	2.2	C/6032-28	T496C225M035(2)H4095	04053-081(2)	0.8	6.0	3,500	177	125
35	3.3	C/6032-28	T496C335(1)035(2)(3)(4)10	N/A	1.2	6.0	2,500	210	125
35	3.3	C/6032-28	T496C335(1)035(2)(3)(4)20	N/A	1.2	6.0	900	350	125
35	3.3	C/6032-28	T496C335M035(2)H4095	04053-082(2)	1.2	6.0	2,500	210	125
35	4.7	D/7343-31	T496D475(1)035(2)(3)(4)10	N/A	1.6	6.0	1,500	316	125
35	4.7	D/7343-31	T496D475(1)035(2)(3)(4)20	N/A	1.6	6.0	700	463	125
35	4.7	D/7343-31	T496D475M035(2)H4095	04053-083(2)	1.6	6.0	1,500	316	125
35	6.8	D/7343-31	T496D685(1)035(2)(3)(4)10	N/A	2.4	6.0	1,300	340	125
35	6.8	D/7343-31	T496D685(1)035(2)(3)(4)20	N/A	2.4	6.0	750	447	125
35	6.8	D/7343-31	T496D685M035(2)H4095	04053-084(2)	2.4	6.0	1,300	340	125
35	10	X/7343-43	T496X106(1)035(2)(3)(4)10	N/A	3.5	6.0	1,000	406	125
VDC at 85°C	µF	KEMET/EIA	(See below for part options)	Drawing Number	µA at +25°C Maximum/ 5 Minutes	% at +25°C 120 Hz Maximum	mΩ at +25°C 100 kHz Maximum	100kHz, 25 °C	°C
Rated Voltage	Rated Cap	Case Code/ Case Size	KEMET Part Number	DLA (DLA)	DC Leakage	DF	ESR	Ripple Current (mArms)	Maximum Operating Temp.

(1) To complete KEMET part number, insert M for ±20% or K for ±10%. Designates Capacitance tolerance.
(2) To complete KEMET part number, insert B (0.1%/1,000 hours), C (0.01%/1,000 hours), D (0.001%/1,000 hours), or A (Non-Weibull Graded). To complete DLA part number insert B (0.1%/1,000 hours), C (0.01%/1,000 hours), D (0.001%/1,000 hours), or Z (Non-Weibull Graded)
(3) To complete KEMET part number, insert C = Hot Solder Dipped, H = Solder-plated, K = Solder Fused, or T = 100% Tin (Sn). Designates Termination Finish.
(4) To complete KEMET part number, insert 61 = No Surge, 62 = 10 cycles Surge +25°C, 63 = 10 cycles Surge −55°C and +85°C after Weibull or 64 = 10 cycles Surge −55°C and +85°C before Weibull; N/A for DLA (DSCC) 04053 product - 4095 applies.

Downloaded from Arrow.com.

Table 1 – Ratings & Part Number Reference cont.

Rated Voltage	Rated Cap	Case Code/ Case Size	KEMET Part Number	DLA (DSCC)	DC Leakage	DF	ESR	Ripple Current (mArms)	Maximum Operating Temp.
VDC at 85°C	µF	KEMET/EIA	(See below for part options)	Drawing Number	µA at +25°C Maximum/ 5 Minutes	% at +25°C 120 Hz Maximum	mΩ at +25°C 100 kHz Maximum	100kHz, 25 °C	°C
35	10	X/7343-43	T496X106(1)035(2)(3)(4)20	N/A	3.5	6.0	500	574	125
35	10	X/7343-43	T496X106M035(2)H4095	04053-085(2)	3.5	6.0	1,000	406	125
35	10	D/7343-31	T496D106(1)035(2)(3)(4)10	N/A	3.5	6.0	400	612	125
35	15	X/7343-43	T496X156(1)035(2)(3)(4)10	N/A	5.3	6.0	900	428	125
35	15	X/7343-43	T496X156(1)035(2)(3)(4)20	N/A	5.3	6.0	500	574	125
35	15	X/7343-43	T496X156M035(2)H4095	04053-086(2)	5.3	6.0	900	428	125
35	15	D/7343-31	T496D156(1)035(2)(3)(4)10	N/A	5.3	6.0	500	547	125
35	22	X/7343-43	T496X226(1)035(2)(3)(4)10	N/A	7.7	6.0	300	742	125
35	22	X/7343-43	T496X226M035(2)H4095	04053-087(2)	7.7	6.0	300	742	125
50	0.15	B/3528-21	T496B154(1)050(2)(3)(4)10	N/A	0.1	4.0	16,000	73	125
50	0.15	B/3528-21	T496B154M050(2)H4095	04053-088(2)	0.1	4.0	16,000	73	125
50	0.22	B/3528-21	T496B224(1)050(2)(3)(4)10	N/A	0.1	4.0	14,000	78	125
50	0.22	B/3528-21	T496B224(1)050(2)(3)(4)20	N/A	0.1	4.0	10,000	92	125
50	0.22	B/3528-21	T496B224M050(2)H4095	04053-089(2)	0.1	4.0	14,000	78	125
50	0.33	B/3528-21	T496B334(1)050(2)(3)(4)10	N/A	0.2	4.0	10,000	92	125
50	0.33	B/3528-21	T496B334(1)050(2)(3)(4)20	N/A	0.2	4.0	2,600	181	125
50	0.33	B/3528-21	T496B334M050(2)H4095	04053-090(2)	0.2	4.0	10,000	92	125
50	0.47	C/6032-28	T496C474(1)050(2)(3)(4)10	N/A	0.2	4.0	8,000	117	125
50	0.47	C/6032-28	T496C474(1)050(2)(3)(4)20	N/A	0.2	4.0	1,900	241	125
50	0.47	C/6032-28	T496C474M050(2)H4095	04053-091(2)	0.2	4.0	8,000	117	125
50	0.68	C/6032-28	T496C684(1)050(2)(3)(4)10	N/A	0.3	4.0	7,000	125	125
50	0.68	C/6032-28	T496C684(1)050(2)(3)(4)20	N/A	0.3	4.0	1,700	254	125
50	0.68	C/6032-28	T496C684M050(2)H4095	04053-092(2)	0.3	4.0	7,000	125	125
50	1	C/6032-28	T496C105(1)050(2)(3)(4)10	N/A	0.5	4.0	5,500	141	125
50	1	C/6032-28	T496C105(1)050(2)(3)(4)20	N/A	0.5	4.0	2,700	202	125
50	1	C/6032-28	T496C105M050(2)H4095	04053-093(2)	0.5	4.0	5,500	141	125
50	1.5	C/6032-28	T496C155(1)050(2)(3)(4)10	N/A	0.8	6.0	5,000	148	125
50	1.5	C/6032-28	T496C155(1)050(2)(3)(4)20	N/A	0.8	6.0	2,000	235	125
50	1.5	C/6032-28	T496C155M050(2)H4095	04053-094(2)	0.8	6.0	5,000	148	125
50	2.2	D/7343-31	T496D225(1)050(2)(3)(4)10	N/A	1.1	6.0	2,500	245	125
50	2.2	D/7343-31	T496D225(1)050(2)(3)(4)20	N/A	1.1	6.0	900	408	125
50	2.2	D/7343-31	T496D225M050(2)H4095	04053-095(2)	1.1	6.0	2,500	245	125
50	3.3	D/7343-31	T496D335(1)050(2)(3)(4)10	N/A	1.7	6.0	2,000	274	125
50	3.3	D/7343-31	T496D335(1)050(2)(3)(4)20	N/A	1.7	6.0	1,000	387	125
50	3.3	D/7343-31	T496D335M050(2)H4095	04053-096(2)	1.7	6.0	2,000	274	125
50	4.7	X/7343-43	T496X475(1)050(2)(3)(4)10	N/A	2.4	6.0	1,500	331	125
50	4.7	X/7343-43	T496X475(1)050(2)(3)(4)20	N/A	2.4	6.0	400	642	125
50	4.7	D/7343-31	T496D475(1)050(2)(3)(4)10	N/A	2.4	6.0	1,500	316	125
VDC at 85°C	µF	KEMET/EIA	(See below for part options)	Drawing Number	µA at +25°C Maximum/ 5 Minutes	% at +25°C 120 Hz Maximum	mΩ at +25°C 100 kHz Maximum	100kHz, 25 °C	°C
Rated Voltage	Rated Cap	Case Code/ Case Size	KEMET Part Number	DLA (DLA)	DC Leakage	DF	ESR	Ripple Current (mArms)	Maximum Operating Temp.

(1) To complete KEMET part number, insert M for ±20% or K for ±10%. Designates Capacitance tolerance.
(2) To complete KEMET part number, insert B (0.1%/1,000 hours), C (0.01%/1,000 hours), D (0.001%/1,000 hours), or A (Non-Weibull Graded). To complete DLA part number insert B (0.1%/1,000 hours), C (0.01%/1,000 hours), D (0.001%/1,000 hours), or Z (Non-Weibull Graded)
(3) To complete KEMET part number, insert C = Hot Solder Dipped, H = Solder-plated, K = Solder Fused, or T = 100% Tin (Sn). Designates Termination Finish.
(4) To complete KEMET part number, insert 61 = No Surge, 62 = 10 cycles Surge +25°C, 63 = 10 cycles Surge −55°C and +85°C after Weibull or 64 = 10 cycles Surge −55°C and +85°C before Weibull; N/A for DLA (DSCC) 04053 product - 4095 applies.

Downloaded from Arrow.com.

Recommended Voltage Derating Guidelines

	−55°C to 85°C	85°C to 125°C
% Change in working DC voltage with temperature	V_R	67% of V_R
Recommended maximum application voltage	50% of V_R	33% of V_R

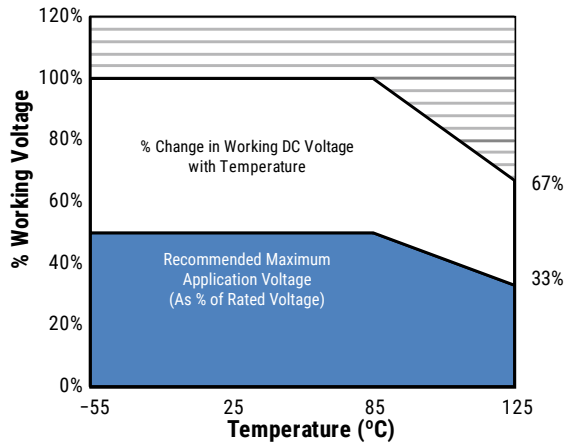

Ripple Current/Ripple Voltage

Permissible AC ripple voltage and current are related to equivalent series resistance (ESR) and the power dissipation capabilities of the device. Permissible AC ripple voltage which may be applied is limited by two criteria:

1. The positive peak AC voltage plus the DC bias voltage, if any, must not exceed the DC voltage rating of the capacitor.
2. The negative peak AC voltage in combination with bias voltage, if any, must not exceed the allowable limits specified for reverse voltage. See the Reverse Voltage section for allowable limits.

The maximum power dissipation by case size can be determined using the table at right. The maximum power dissipation rating stated in the table must be reduced with increasing environmental operating temperatures. Refer to the table below for temperature compensation requirements.

Temperature Compensation Multipliers for Maximum Ripple Current		
T ≤ 25°C	T ≤ 85°C	T ≤ 125°C
1.00	0.90	0.40

T= Environmental Temperature

The maximum power dissipation rating must be reduced with increasing environmental operating temperatures. Refer to the Temperature Compensation Multiplier table for details.

KEMET Case Code	EIA Case Code	Maximum Power Dissipation (Pmax) mWatts at 25°C with +20°C Rise
A	3216–18	75
B	3528–21	85
C	6032–28	110
D	7343–31	150
X	7343–43	165
E	7360–38	200
S	3216–12	60
T	3528–12	70
U	6032–15	90
V	7343–20	125
T510X	7343–43	270
T510E	7360–38	285

Using the P max of the device, the maximum allowable rms ripple current or voltage may be determined.

$I(max) = \sqrt{P\ max/R}$
$E(max) = Z\sqrt{P\ max/R}$

I = rms ripple current (amperes)
E = rms ripple voltage (volts)
P max = maximum power dissipation (watts)
R = ESR at specified frequency (ohms)
Z = Impedance at specified frequency (ohms)

Downloaded from Arrow.com.

Reverse Voltage

Solid tantalum capacitors are polar devices and may be permanently damaged or destroyed if connected with the wrong polarity. The positive terminal is identified on the capacitor body by a stripe plus in some cases a beveled edge. A small degree of transient reverse voltage is permissible for short periods per the table. The capacitors should not be operated continuously in reverse mode, even within these limits.

Temperature	Permissible Transient Reverse Voltage
25°C	15% of Rated Voltage
85°C	5% of Rated Voltage
125°C	1% of Rated Voltage

Table 2 – Land Dimensions/Courtyard

KEMET	Metric Size Code	Density Level A: Maximum (Most) Land Protrusion (mm)					Density Level B: Median (Nominal) Land Protrusion (mm)					Density Level C: Minimum (Least) Land Protrusion (mm)				
Case	EIA	W	L	S	V1	V2	W	L	S	V1	V2	W	L	S	V1	V2
A	3216–18	1.35	2.20	0.62	6.02	2.80	1.23	1.80	0.82	4.92	2.30	1.13	1.42	0.98	4.06	2.04
B	3528–21	2.35	2.21	0.92	6.32	4.00	2.23	1.80	1.12	5.22	3.50	2.13	1.42	1.28	4.36	3.24
C	6032–28	2.35	2.77	2.37	8.92	4.50	2.23	2.37	2.57	7.82	4.00	2.13	1.99	2.73	6.96	3.74
D	7343–31	2.55	2.77	3.67	10.22	5.60	2.43	2.37	3.87	9.12	5.10	2.33	1.99	4.03	8.26	4.84
L	6032-19	2.35	2.77	2.37	8.92	4.50	2.23	2.37	2.57	7.82	4.00	2.13	1.99	2.73	6.96	3.74
M	3528-15	2.35	2.20	0.92	6.32	4.00	2.23	1.80	1.12	5.22	3.50	2.13	1.42	1.28	4.36	3.24
H	7360-20	4.25	2.77	3.67	10.22	7.30	4.13	2.37	3.87	9.12	6.80	4.03	1.99	4.03	8.26	6.54
E[1]	7360–38	3.25	2.77	3.67	10.22	7.30	3.13	2.37	3.87	9.12	6.80	3.03	1.99	4.03	8.26	6.54
Q	7343-12	2.55	2.77	3.67	10.22	5.60	2.43	2.37	3.87	9.12	5.10	2.33	1.99	4.03	8.26	4.84
R[2]	2012-12	1.05	1.83	0.15	4.82	2.50	0.93	1.50	0.22	3.72	2.00	0.83	1.12	0.38	2.86	1.74
S[2]	3216–12	1.35	2.20	0.62	6.02	2.80	1.23	1.80	0.82	4.92	2.30	1.13	1.42	0.98	4.06	2.04
T	3528–12	2.35	2.20	0.92	6.32	4.00	2.23	1.80	1.12	5.22	3.50	2.13	1.42	1.28	4.36	3.24
U	6032–15	2.35	2.77	2.37	8.92	4.50	2.23	2.37	2.57	7.82	4.00	2.13	1.99	2.73	6.96	3.74
V	7343–21	2.55	2.77	3.67	10.22	5.60	2.43	2.37	3.87	9.12	5.10	2.33	1.99	4.03	8.26	4.84
W	7343–15	2.55	2.77	3.67	10.22	5.60	2.43	2.37	3.87	9.12	5.10	2.33	1.99	4.03	8.26	4.84
X[1]	7343–43	2.55	2.77	3.67	10.22	5.60	2.43	2.37	3.87	9.12	5.10	2.33	1.99	4.03	8.26	4.84
Y[1]	7343–40	2.55	2.77	3.67	10.22	5.60	2.43	2.37	3.87	9.12	5.10	2.33	1.99	4.03	8.26	4.84

Density Level A: *For low-density product applications. Recommended for wave solder applications and provides a wider process window for reflow solder processes.*
Density Level B: *For products with a moderate level of component density. Provides a robust solder attachment condition for reflow solder processes.*
Density Level C: *For high component density product applications. Before adapting the minimum land pattern variations the user should perform qualification testing based on the conditions outlined in IPC standard 7351 (IPC–7351).*
[1] Height of these chips may create problems in wave soldering.

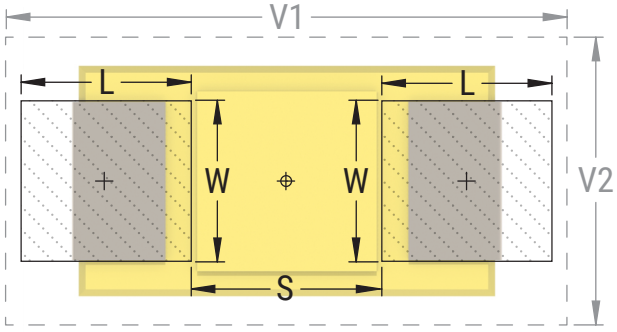

Grid Placement Courtyard

Downloaded from Arrow.com.

Soldering Process

The KEMET families of surface mount capacitors are compatible with wave (single or dual), convection, IR, or vapor phase reflow techniques. Preheating of these components is recommended to avoid extreme thermal stress. KEMET's recommended profile conditions for convection and IR reflow reflect the profile conditions of the IPC/J–STD–020D standard for moisture sensitivity testing. The devices can safely withstand a maximum of three reflow passes at these conditions.

Please note that although the X/7343–43 case size can withstand wave soldering, the tall profile (4.3 mm maximum) dictates care in wave process development.

Hand soldering should be performed with care due to the difficulty in process control. If performed, care should be taken to avoid contact of the soldering iron to the molded case. The iron should be used to heat the solder pad, applying solder between the pad and the termination, until reflow occurs. Once reflow occurs, the iron should be removed immediately. “Wiping” the edges of a chip and heating the top surface is not recommended.

During typical reflow operations, a slight darkening of the gold-colored epoxy may be observed. This slight darkening is normal and not harmful to the product. Marking permanency is not affected by this change.

Profile Feature	SnPb Assembly	Pb-Free Assembly
Preheat/Soak		
Temperature Minimum (T_{Smin})	100°C	150°C
Temperature Maximum (T_{Smax})	150°C	200°C
Time (t_s) from T_{smin} to T_{smax})	60 – 120 seconds	60 – 120 seconds
Ramp-up Rate (T_L to T_P)	3°C/second maximum	3°C/second maximum
Liquidous Temperature (T_L)	183°C	217°C
Time Above Liquidous (t_L)	60 – 150 seconds	60 – 150 seconds
Peak Temperature (T_P)	220°C* 235°C**	250°C* 260°C**
Time within 5°C of Maximum Peak Temperature (t_p)	20 seconds maximum	30 seconds maximum
Ramp-down Rate (T_P to T_L)	6°C/second maximum	6°C/second maximum
Time 25°C to Peak Temperature	6 minutes maximum	8 minutes maximum

Note: All temperatures refer to the center of the package, measured on the package body surface that is facing up during assembly reflow.
** For Case Size height > 2.5 mm*
*** For Case Size height ≤ 2.5 mm*

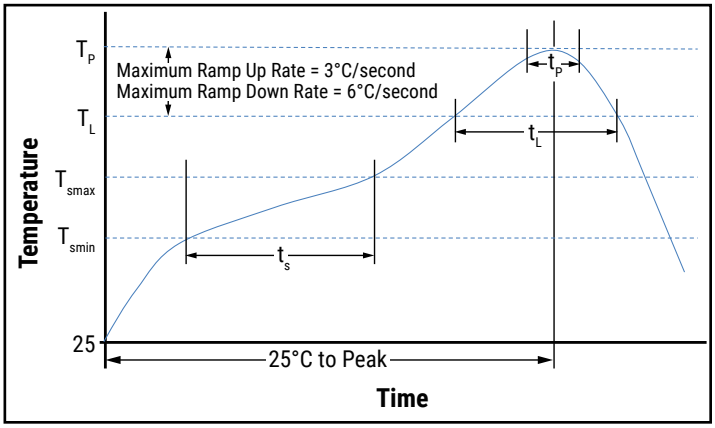

Storage

Tantalum chip capacitors should be stored in normal working environments. While the chips themselves are quite robust in other environments, solderability will be degraded by exposure to high temperatures, high humidity, corrosive atmospheres, and long term storage. In addition, packaging materials will be degraded by high temperature – reels may soften or warp and tape peel force may increase. KEMET recommends that maximum storage temperature not exceed 40°C and maximum storage humidity not exceed 60% relative humidity. Temperature fluctuations should be minimized to avoid condensation on the parts and atmospheres should be free of chlorine and sulphur bearing compounds. For optimized solderability, chip stock should be used promptly, preferably within three years of receipt.

Downloaded from Arrow.com.

Construction

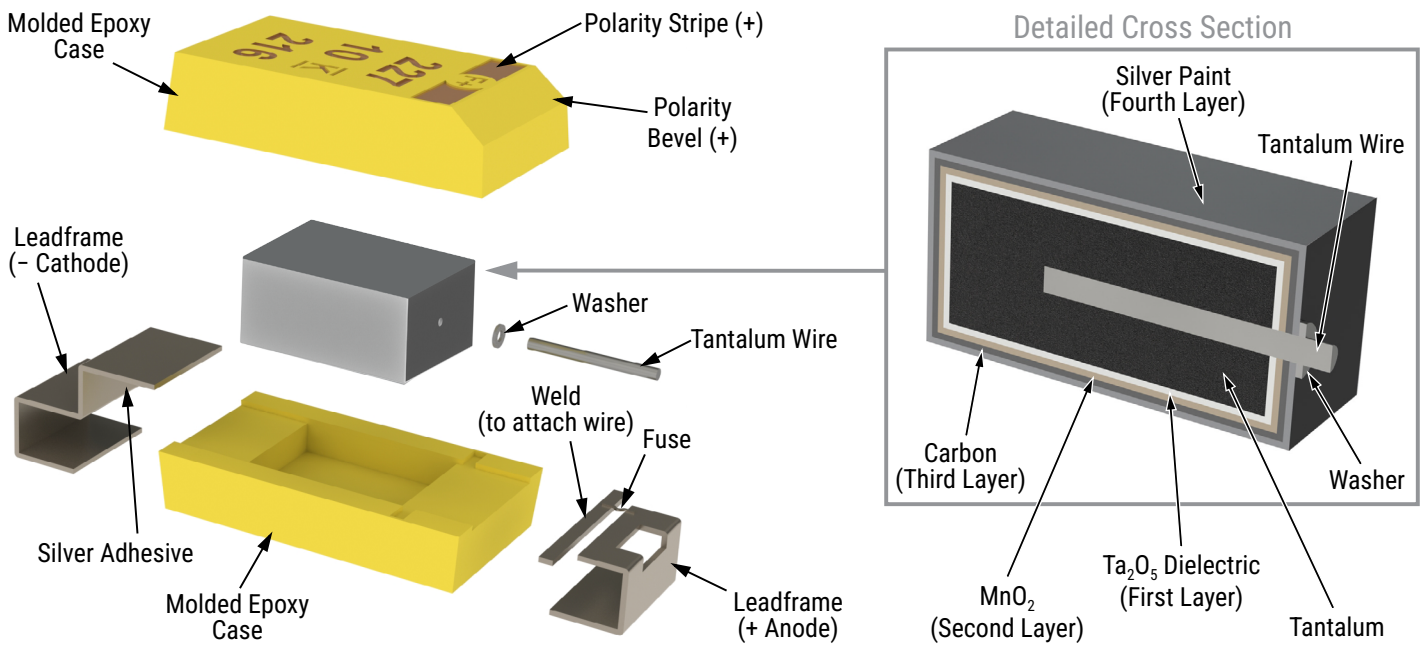

Capacitor Marking

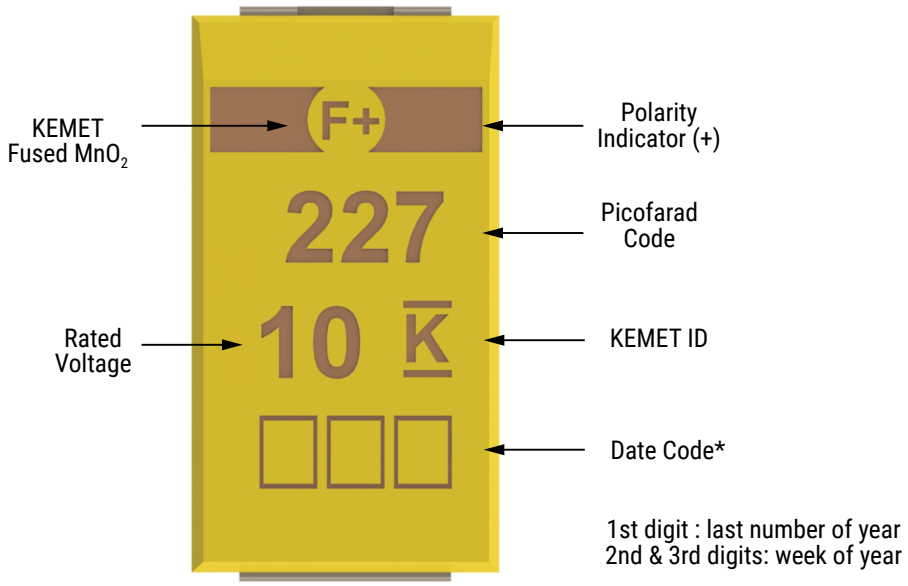

Downloaded from Arrow.com.

Tape & Reel Packaging Information

KEMET's molded chip capacitor families are packaged in 8 and 12 mm plastic tape on 7" and 13" reels in accordance with *EIA Standard 481*: Embossed Carrier Taping of Surface Mount Components for Automatic Handling. This packaging system is compatible with all tape-fed automatic pick-and-place systems.

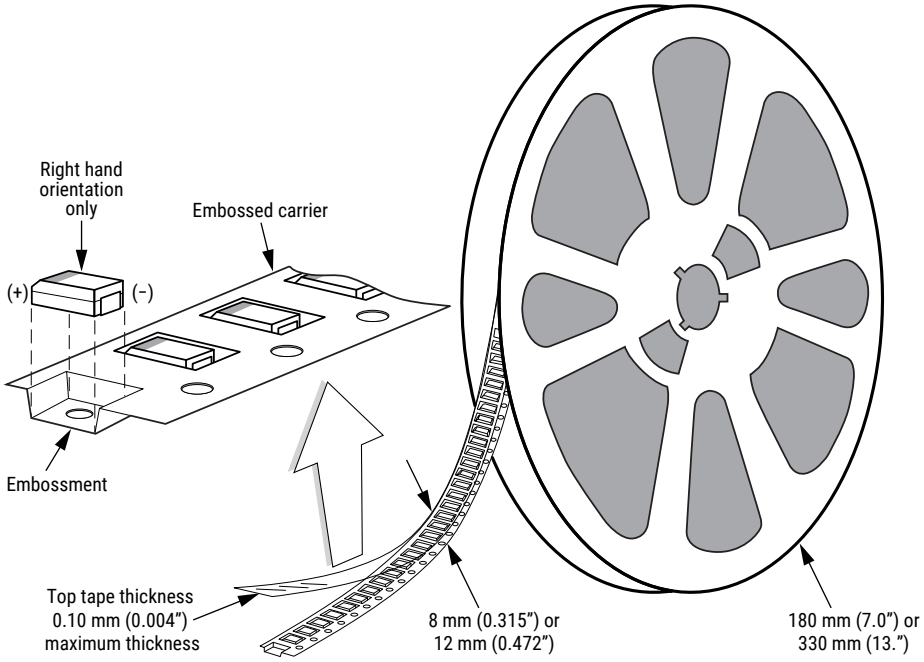

Table 3 – Packaging Quantity

Case Code		Tape Width (mm)	7" Reel*	13" Reel*
KEMET	EIA			
S	3216-12	8	2,500	10,000
T	3528-12	8	2,500	10,000
M	3528-15	8	2,500	8,000
U	6032-15	12	1,000	5,000
L	6032-19	12	1,000	3,000
W	7343-15	12	1,000	3,000
Z	7343-17	12	1,000	3,000
V	7343-20	12	1,000	3,000
A	3216-18	8	2,000	9,000
B	3528-21	8	2,000	8,000
C	6032-28	12	500	3,000
D	7343-31	12	500	2,500
Q	7343-12	12	1,000	3,000
Y	7343-40	12	500	2,000
X	7343-43	12	500	2,000
E/T428P	7360-38	12	500	2,000
H	7360-20	12	1,000	2,500
O	7360-43	12	250	1,000

** No C-Spec required for 7" reel packaging. C-7280 required for 13" reel packaging.*

Downloaded from Arrow.com.

Figure 1 – Embossed (Plastic) Carrier Tape Dimensions

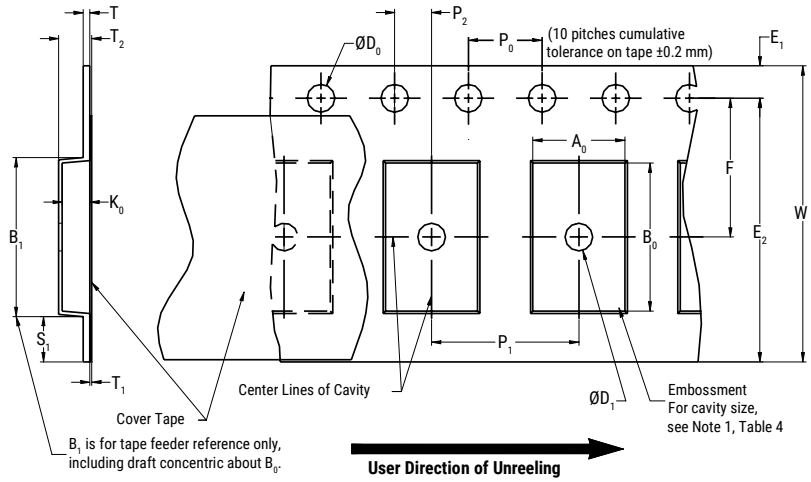

Table 4 – Embossed (Plastic) Carrier Tape Dimensions

Metric will govern

Constant Dimensions — Millimeters (Inches)									
Tape Size	D_0	D_1 Minimum Note 1	E_1	P_0	P_2	R Reference Note 2	S_1 Minimum Note 3	T Maximum	T_1 Maximum
8 mm	1.5 +0.10/−0.0 (0.059 +0.004/−0.0)	1.0 (0.039)	1.75 ±0.10 (0.069 ±0.004)	4.0 ±0.10 (0.157 ±0.004)	2.0 ±0.05 (0.079 ±0.002)	25.0 (0.984)	0.600 (0.024)	0.600 (0.024)	0.100 (0.004)
12 mm		1.5 (0.059)				30 (1.181)			

Variable Dimensions — Millimeters (Inches)								
Tape Size	Pitch	B_1 Maximum Note 4	E_2 Minimum	F	P_1	T_2 Maximum	W Maximum	A_0, B_0 & K_0
8 mm	Single (4 mm)	4.35 (0.171)	6.25 (0.246)	3.5 ±0.05 (0.138 ±0.002)	4.0 ±0.10 (0.157 ±0.004)	2.5 (0.098)	8.3 (0.327)	Note 5
12 mm	Single (4 mm) and Double (8 mm)	8.2 (0.323)	10.25 (0.404)	5.5 ±0.05 (0.217 ±0.002)	4.0 ±0.10 (0.157 ±0.004) or 8.0 ±0.10 (0.315 ±0.004)	4.6 (0.181)	12.3 (0.484)	

1. *The embossment hole location shall be measured from the sprocket hole controlling the location of the embossment. Dimensions of embossment location and hole location shall be applied independent of each other.*
2. *The tape, with or without components, shall pass around R without damage (see Figure 4).*
3. *If S_1 < 1.0 mm, there may not be enough area for cover tape to be properly applied (see EIA Standard 481–D, paragraph 4.3, section b).*
4. *B_1 dimension is a reference dimension for tape feeder clearance only.*
5. *The cavity defined by A_0, B_0 and K_0 shall surround the component with sufficient clearance that:*
   (a) the component does not protrude above the top surface of the carrier tape.
   (b) the component can be removed from the cavity in a vertical direction without mechanical restriction, after the top cover tape has been removed.
   (c) rotation of the component is limited to 20° maximum for 8 and 12 mm tapes (see Figure 2).
   (d) lateral movement of the component is restricted to 0.5 mm maximum for 8 mm and 12 mm wide tape (see Figure 3).
   (e) see Addendum in EIA Standard 481–D for standards relating to more precise taping requirements.

Downloaded from Arrow.com.

Packaging Information Performance Notes

1. Cover tape break force: 1.0 kg minimum.
2. Cover tape peel strength: The total peel strength of the cover tape from the carrier tape shall be:

Tape Width	Peel Strength
8 mm	0.1 to 1.0 newton (10 to 100 gf)
12 mm	0.1 to 1.3 newton (10 to 130 gf)

The direction of the pull shall be opposite the direction of the carrier tape travel. The pull angle of the carrier tape shall be 165° to 180° from the plane of the carrier tape. During peeling, the carrier and/or cover tape shall be pulled at a velocity of 300 ±10 mm/minute.
3. Labeling: Bar code labeling (standard or custom) shall be on the side of the reel opposite the sprocket holes. *Refer to EIA Standards 556 and 624*.

Figure 2 – Maximum Component Rotation

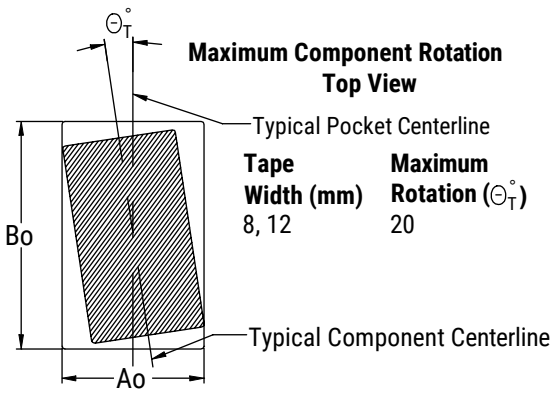

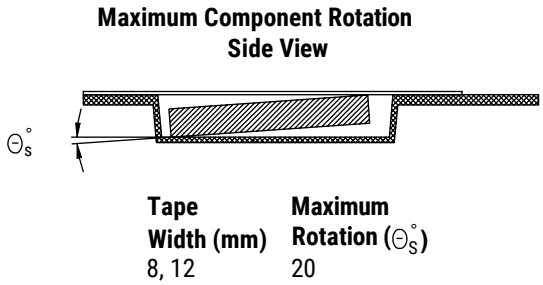

Figure 3 – Maximum Lateral Movement

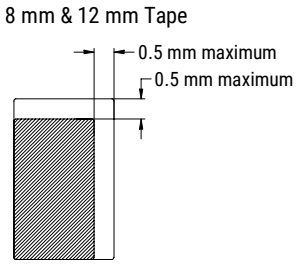

Figure 4 – Bending Radius

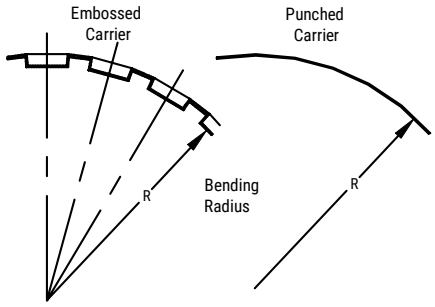

Downloaded from Arrow.com.

Figure 5 – Reel Dimensions

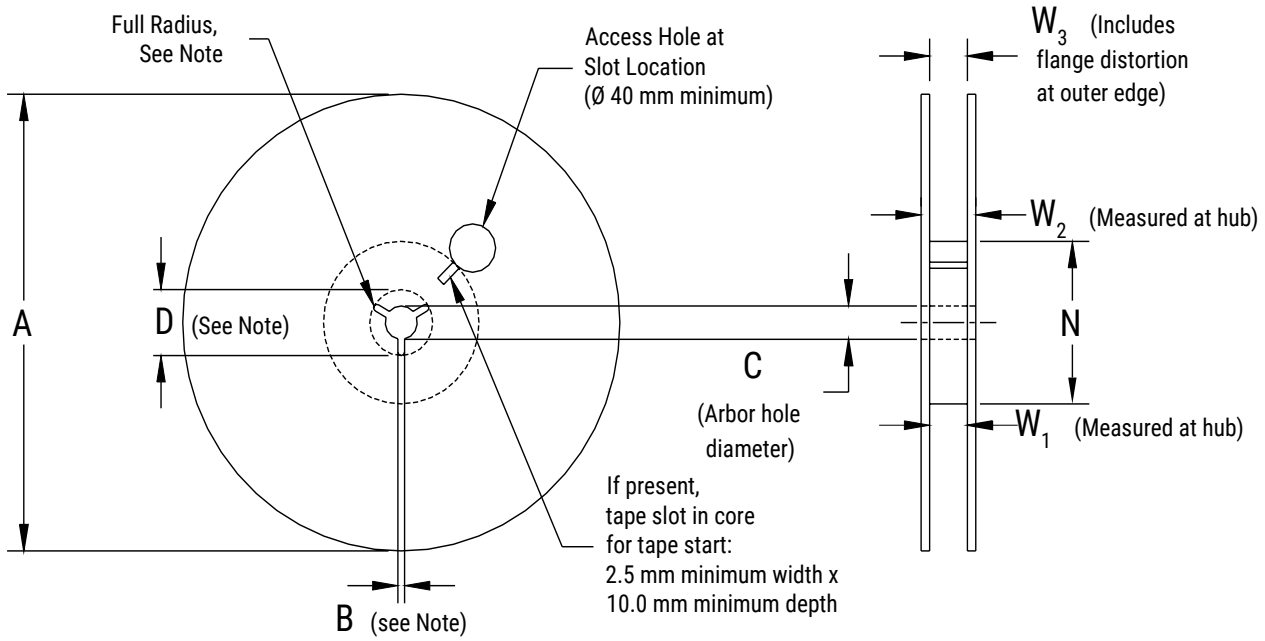

Note: Drive spokes optional; if used, dimensions B and D shall apply.

Table 5 – Reel Dimensions

Metric will govern

Constant Dimensions — Millimeters (Inches)				
Tape Size	A	B Minimum	C	D Minimum
8 mm	178 ±0.20 (7.008 ±0.008) or 330 ±0.20 (13.000 ±0.008)	1.5 (0.059)	13.0 +0.5/−0.2 (0.521 +0.02/−0.008)	20.2 (0.795)
12 mm				

Variable Dimensions — Millimeters (Inches)				
Tape Size	N Minimum	W_1	W_2 Maximum	W_3
8 mm	50 (1.969)	8.4 +1.5/−0.0 (0.331 +0.059/−0.0)	14.4 (0.567)	Shall accommodate tape width without interference
12 mm		12.4 +2.0/−0.0 (0.488 +0.078/−0.0)	18.4 (0.724)	

Downloaded from Arrow.com.

Figure 6 – Tape Leader & Trailer Dimensions

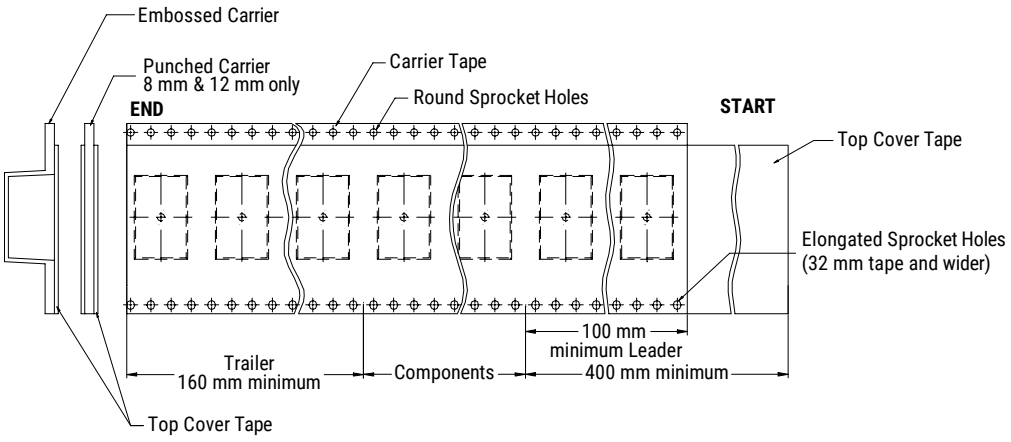

Figure 7 – Maximum Camber

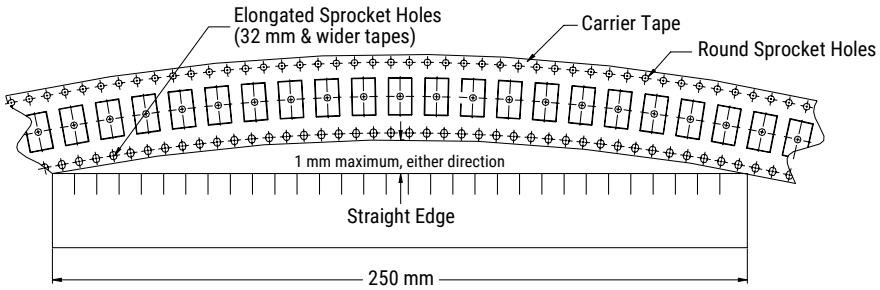

Downloaded from Arrow.com.

KEMET Electronics Corporation Sales Offices

For a complete list of our global sales offices, please visit https://www.yageogroup.com/SalesResources/SalesOffices

Disclaimer

All product specifications, statements, information and data (collectively, the "Information") in this datasheet are subject to change. The customer is responsible for checking and verifying the extent to which the Information contained in this publication is applicable to an order at the time the order is placed. All Information given herein is believed to be accurate and reliable, but it is presented without guarantee, warranty, or responsibility of any kind, expressed or implied.

Statements of suitability for certain applications are based on KEMET Electronics Corporation's ("KEMET") knowledge of typical operating conditions for such applications, but are not intended to constitute – and KEMET specifically disclaims – any warranty concerning suitability for a specific customer application or use. The Information is intended for use only by customers who have the requisite experience and capability to determine the correct products for their application. Any technical advice inferred from this Information or otherwise provided by KEMET with reference to the use of KEMET's products is given gratis, and KEMET assumes no obligation or liability for the advice given or results obtained.

Although KEMET designs and manufactures its products to the most stringent quality and safety standards, given the current state of the art, isolated component failures may still occur. Accordingly, customer applications which require a high degree of reliability or safety should employ suitable designs or other safeguards (such as installation of protective circuitry or redundancies) in order to ensure that the failure of an electrical component does not result in a risk of personal injury or property damage.

Although all product–related warnings, cautions and notes must be observed, the customer should not assume that all safety measures are indicated or that other measures may not be required.

KEMET is a registered trademark of KEMET Electronics Corporation.

Downloaded from Arrow.com.