Copyright FCI.

FCIconnect.com

PRODUCT NUMBER	PITCH
T4xx04x000J0G	5.00 mm

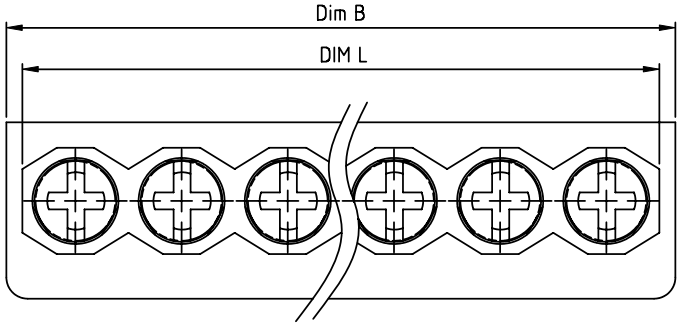

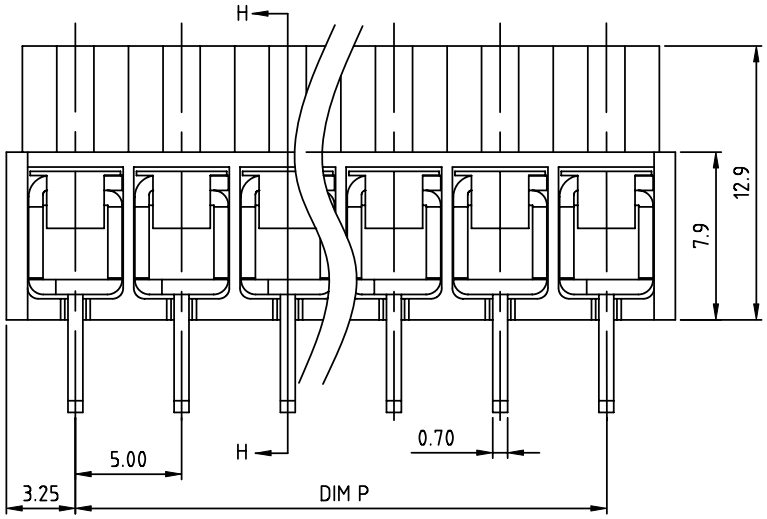

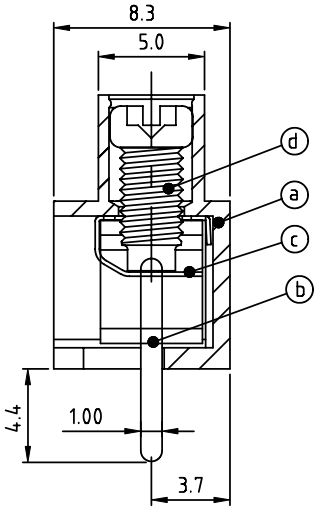

SECTION H-H

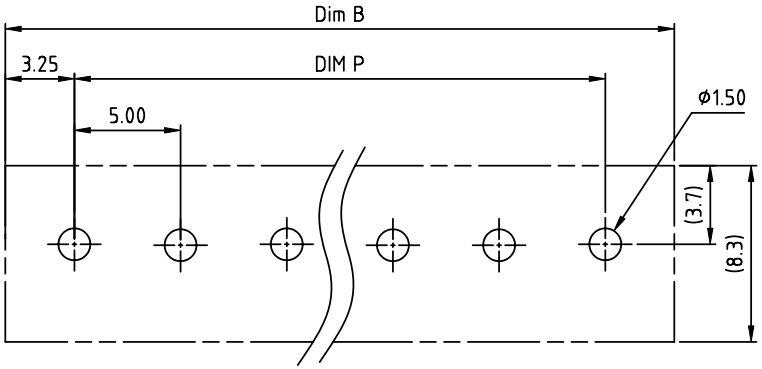

RECOMMENDED P.C.B LAYOUT
TOP VIEW

Material:
- Item ⓐ Insulator(housing):Thermoplastic (UL 94V-0)
- Item ⓑ Terminal:Brass,Tin plated
- Item ⓒ Wire guard:Stainless steel
- Item ⓓ Terminal screw: Steel Zinc plating"+/-"combination type

Electrical cULus/VDE
- Voltage rating:300VAC/450VAC
- Current rating:10A/17.5A
- Wire range: 0.75-4.0mm^2
- Solid wire(AWG):12-20
- Stranded wire(AWG):12-20
- Torque: 3.5Lb-In/0.4Nm
- Screw: M3
- Wire strip length: 6-7mm
- Withstanding Voltage: 1.6KV/2.5KV
- Operating temperature: -40°C to +115°C
- Soldering temperature: 260°C±5°C/5 Sec
- Safety Approval: c UL us VDE

N = Number of poles
Dim L=Nx5.0
Dim P=(N-1)x5.0
Dim B=Nx5.0+1.5

poles	Dim L	Dim P
2-6p	±0.20	±0.15
7-12p	±0.25	±0.20
13-18p	±0.30	±0.25
19-24p	±0.40	±0.30

PART NO.: T4 xx 04 x 0 00J0 G

Solid block
No. of poles
02 2 poles
03 3 poles
... ...
24 24 poles

Body Color
0 Black (RAL9005)
2 Red (RAL3001/D)
3 Orange(RAL2011/P)
4 Yellow(RAL1018/A)
5 Green(RAL6018/T)
6 Blue (RAL5015/A)
8 Grey(RAL7035/D)
9 White(RAL1102)
C Green(RAL6018/U)

RoHS compliant
(lead<4%)
In copper Alloy

mat'l. code				surface ASME Y14.5	tolerance ASME Y14.5	projection	product family TERMINAL BLOCK
ltr	ecn no	dr	date	tolerances unless otherwise specified			title
				angles	linear X.±0.5 / X.X±0.3 / X.XX±0.1	MM	TERMINAL BLOCK
				X°±1°		scale	WIRE PROTECTOR,180D WIRE INLET,SOLID BLOCK
				dr	EVIN ZHONG 040114	FCI	dwg no T4xx04x000J0G — sheet 1 of 1 — size A4
				engr	EVIN ZHONG 040114		
				chr	HANKE FENG 040114		
				appd	SHI JUN 040114		type CUSTOMER Drawing
sheet index	revision	A					
	sheet	1					

form: A4mmXLc

Downloaded from Arrow.com.