EiceDRIVER™

High voltage gate driver IC

Evaluation Board

Application Note

EVAL-2EDL23I06PJ

Application Note

Rev. 1.0 2014-04-11

Infineon Technologies AG

Downloaded from Arrow.com.

Edition 2014-04-11
Published by Infineon Technologies AG,
81726 Munich, Germany.
© 2014 Infineon Technologies AG
All Rights Reserved.

LEGAL DISCLAIMER

THE INFORMATION GIVEN IN THIS APPLICATION NOTE IS GIVEN AS A HINT FOR THE IMPLEMENTATION OF THE INFINEON TECHNOLOGIES COMPONENT ONLY AND SHALL NOT BE REGARDED AS ANY DESCRIPTION OR WARRANTY OF A CERTAIN FUNCTIONALITY, CONDITION OR QUALITY OF THE INFINEON TECHNOLOGIES COMPONENT. THE RECIPIENT OF THIS APPLICATION NOTE MUST VERIFY ANY FUNCTION DESCRIBED HEREIN IN THE REAL APPLICATION. INFINEON TECHNOLOGIES HEREBY DISCLAIMS ANY AND ALL WARRANTIES AND LIABILITIES OF ANY KIND (INCLUDING WITHOUT LIMITATION WARRANTIES OF NON-INFRINGEMENT OF INTELLECTUAL PROPERTY RIGHTS OF ANY THIRD PARTY) WITH RESPECT TO ANY AND ALL INFORMATION GIVEN IN THIS APPLICATION NOTE.

Information

For further information on technology, delivery terms and conditions and prices, please contact the nearest Infineon Technologies Office (**www.infineon.com**).

Warnings

Due to technical requirements, components may contain dangerous substances. For information on the types in question, please contact the nearest Infineon Technologies Office.

Infineon Technologies components may be used in life-support devices or systems only with the express written approval of Infineon Technologies, if a failure of such components can reasonably be expected to cause the failure of that life-support device or system or to affect the safety or effectiveness of that device or system. Life support devices or systems are intended to be implanted in the human body or to support and/or maintain and sustain and/or protect human life. If they fail, it is reasonable to assume that the health of the user or other persons may be endangered.

Downloaded from Arrow.com.

Revision History: 2014-04 Rev.1.0	
Page or Item	**Subjects (major changes since last revision)**

Trademarks of Infineon Technologies AG

AURIX™, C166™, CanPAK™, CIPOS™, CIPURSE™, EconoPACK™, CoolMOS™, CoolSET™, CORECONTROL™, CROSSAVE™, DAVE™, DI-POL™, EasyPIM™, EconoBRIDGE™, EconoDUAL™, EconoPIM™, EconoPACK™, EiceDRIVER™, eupec™, FCOS™, HITFET™, HybridPACK™, I²RF™, ISOFACE™, IsoPACK™, MIPAQ™, ModSTACK™, my-d™, NovalithIC™, OptiMOS™, ORIGA™, POWERCODE™; PRIMARION™, PrimePACK™, PrimeSTACK™, PRO-SIL™, PROFET™, RASIC™, ReverSave™, SatRIC™, SIEGET™, SINDRION™, SIPMOS™, SmartLEWIS™, SOLID FLASH™, TEMPFET™, thinQ!™, TRENCHSTOP™, TriCore™.

Other Trademarks

Advance Design System™ (ADS) of Agilent Technologies, AMBA™, ARM™, MULTI-ICE™, KEIL™, PRIMECELL™, REALVIEW™, THUMB™, µVision™ of ARM Limited, UK. AUTOSAR™ is licensed by AUTOSAR development partnership. Bluetooth™ of Bluetooth SIG Inc. CAT-iq™ of DECT Forum. COLOSSUS™, FirstGPS™ of Trimble Navigation Ltd. EMV™ of EMVCo, LLC (Visa Holdings Inc.). EPCOS™ of Epcos AG. FLEXGO™ of Microsoft Corporation. FlexRay™ is licensed by FlexRay Consortium. HYPERTERMINAL™ of Hilgraeve Incorporated. IEC™ of Commission Electrotechnique Internationale. IrDA™ of Infrared Data Association Corporation. ISO™ of INTERNATIONAL ORGANIZATION FOR STANDARDIZATION. MATLAB™ of MathWorks, Inc. MAXIM™ of Maxim Integrated Products, Inc. MICROTEC™, NUCLEUS™ of Mentor Graphics Corporation. MIPI™ of MIPI Alliance, Inc. MIPS™ of MIPS Technologies, Inc., USA. muRata™ of MURATA MANUFACTURING CO., MICROWAVE OFFICE™ (MWO) of Applied Wave Research Inc., OmniVision™ of OmniVision Technologies, Inc. Openwave™ Openwave Systems Inc. RED HAT™ Red Hat, Inc. RFMD™ RF Micro Devices, Inc. SIRIUS™ of Sirius Satellite Radio Inc. SOLARIS™ of Sun Microsystems, Inc. SPANSION™ of Spansion LLC Ltd. Symbian™ of Symbian Software Limited. TAIYO YUDEN™ of Taiyo Yuden Co. TEAKLITE™ of CEVA, Inc. TEKTRONIX™ of Tektronix Inc. TOKO™ of TOKO KABUSHIKI KAISHA TA. UNIX™ of X/Open Company Limited. VERILOG™, PALLADIUM™ of Cadence Design Systems, Inc. VLYNQ™ of Texas Instruments Incorporated. VXWORKS™, WIND RIVER™ of WIND RIVER SYSTEMS, INC. ZETEX™ of Diodes Zetex Limited.

Last Trademarks Update 2011-11-11

Downloaded from Arrow.com.

Table of Contents

Table of Contents **4**

1 Introduction **5**

2 Design features **6**
2.1 Main features 6
2.2 Board specifications 7
2.3 Pin assignment 8

3 Electrical features **9**
3.1 Supply voltages +5V and +15V 9
3.2 Undervoltage lockout 9
3.3 Short circuit detection 9
3.4 Current amplifier 10
3.5 Deadtime and interlock function 10
3.6 IGBT turn - on / off 11
3.7 Input PWM-Signals 12
3.8 DC-Link capacitor 12
3.9 Connection of inductive load for non repetitive single or multi pulse measurements 12

4 Board design details **14**
4.1 Schematic 14
4.2 Layout 16
4.2.1 Layout top layer 16
4.2.2 Layout bottom layer 16
4.2.3 Layout top place 17
4.3 Bill of material 18

Downloaded from Arrow.com.

Warnings

The described board is an evaluation board dedicated for laboratory environment only. It operates at high voltages. This board must be operated by qualified, skilled personnel familiar with all applicable safety standards.

1 Introduction

The gate driver evaluation board EVAL-2EDL23I06PJ was developed to show the functionalities and key features of the Infineon IGBT gate driver 2EDL23I06PJ.

The board is available from Infineon in sampling quantities. The properties of this part are described in the datasheet chapter of this document, whereas the remaining paragraphs provide information intended to enable the customer to copy, modify and qualify the design for production, according to their own specific requirements.

The design of the EVAL-2EDL23I06PJ was performed with respect to the environmental conditions described in this document. The design was tested as described in this document, but not qualified regarding manufacturing, lifetime or over the full ambient operating conditions.

The boards provided by Infineon are subjected to functional testing only.

Due to their purpose Evaluation Boards are not subjected to the same procedures regarding Returned Material Analysis (RMA), Process Change Notification (PCN) and Product Discontinuation (PD) as regular products. These Evaluation Boards are used for development support only and should not be used as reference design for volume production.

See Legal Disclaimer and Warnings for further restrictions on Infineon´s warranty and liability.

Downloaded from Arrow.com.

2 Design features

2.1 Main features

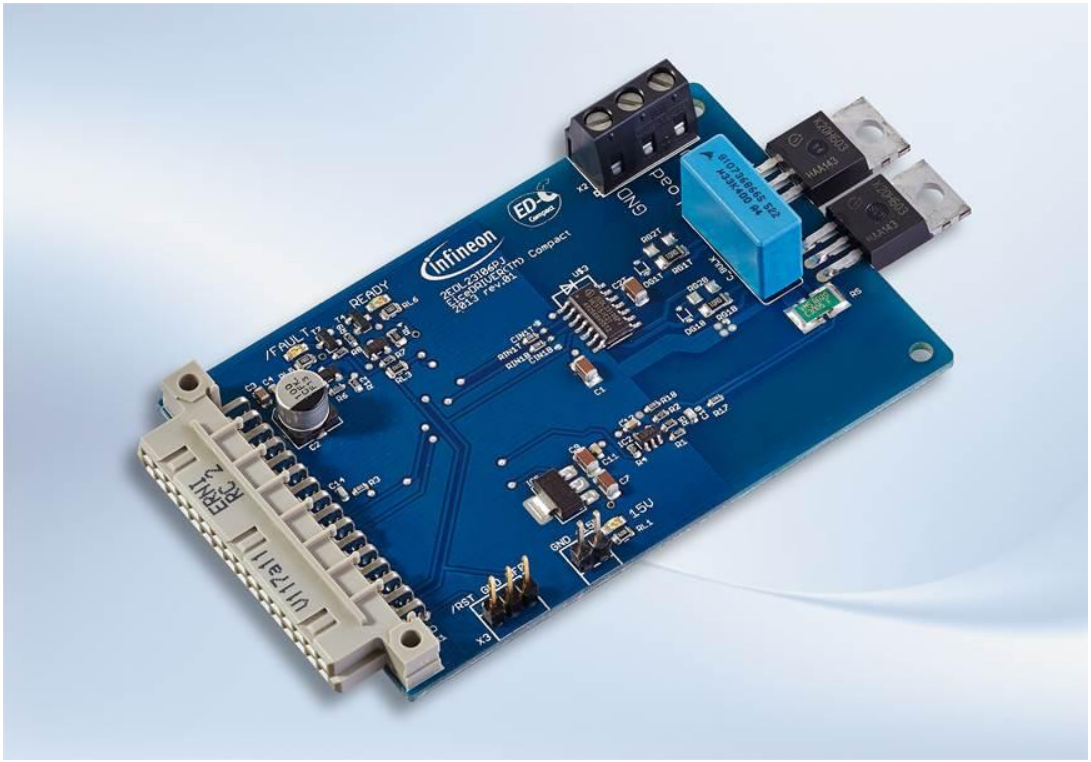

Figure 1 Top view of the EVAL-2EDL23I06PJ

The EVAL-2EDL23I06PJ contains an Infineon IGBT gate half bridge driver 2EDL23I06PJ and two Infineon IGBTs IKP20N60H3.

The evaluation board provides the following main features

- Short circuit protection by shunt measurement incl. status LED (/FAULT) and latch
- Current measurement with operational amplifier
- Under voltage lock out
- Bootstrap functionality for high side IGBT by using the internal ultra-fast bootstrap diode of the 2EDL23I06PJ
- Deadtime and interlock function integrated in the IGBT gate driver.
- Connector for 15V supply, Reset, High voltage supply, external load
- Internal voltage regulator for 5V supply
- Status LED for 15V supply, /FAULT state
- DC link capacitor

Downloaded from Arrow.com.

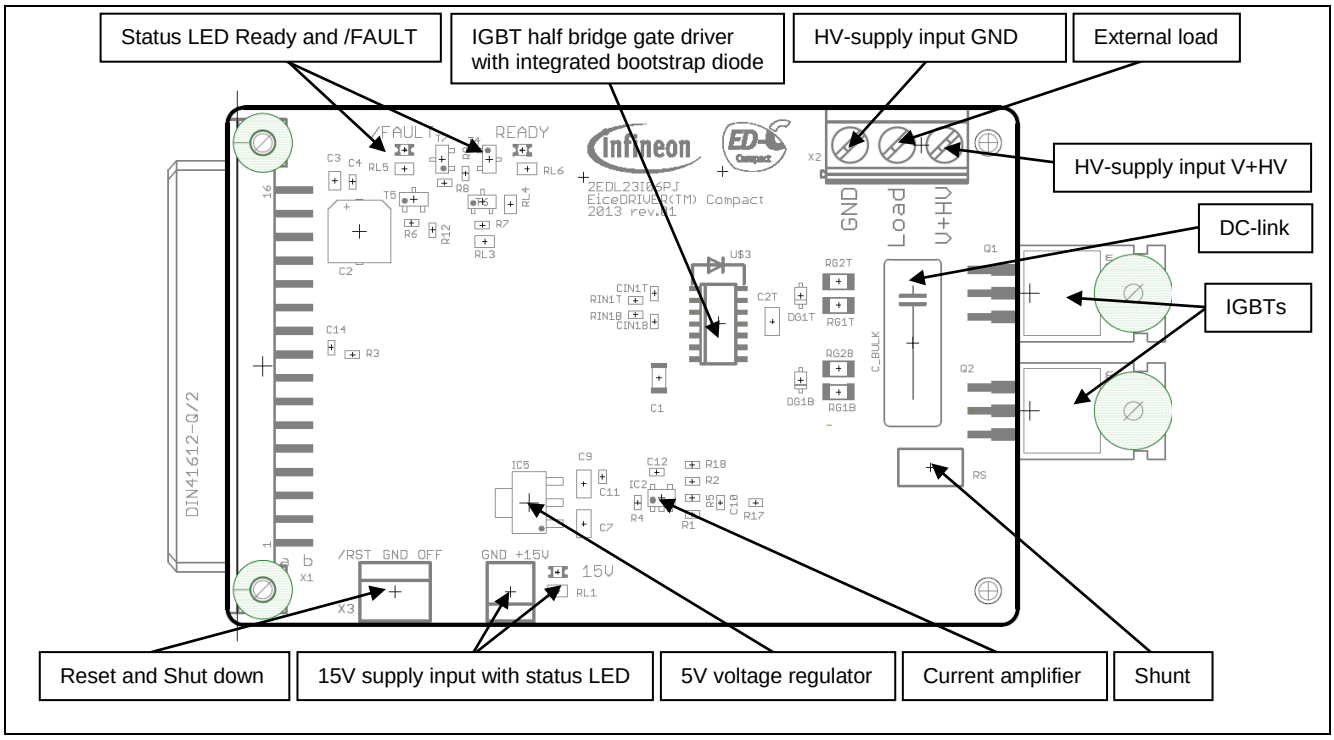

Figure 2 Overview functionalities on top-side

2.2 Board specifications

All values are specified at an ambient temperature of T_A = 25°C

Table 1 Board specifications

Parameter	Description	Typ.	min	max	Unit
V_{DD}	15V voltage supply	15	13.2	17.5	V
V_{DC}	High voltage supply	320	-	450	V
$I_{Out,pk}$	Single pulse peak output current	-	-	20	A
$I_{Out,rms}$	RMS output current	-	-	4	A
f_p	Switching frequency	40	-	100	kHz

Downloaded from Arrow.com.

2.3 Pin assignment

Table 2 Pin assignment

Connector name	Pin no.	Pin name	Description
RESET	Left terminal	/RST	same as X1-B1
	Middle terminal	GND	same as X1-A16
	Right terminal	OFF	same as X1-B2
+15V (VDD)	Right terminal	+15V	positive 15V supply
	Left terminal	GND	
X1	A16	GND	reference for 15V supply and input signals
	B1	/RST	input – 0V to reset circuit
	B2	/FLT	output over current; OC, 0..15V
	B7	IN_T	non-inverting input top IGBT; 0V off; 5V on
	B8	IN_B	non-inverting input bottom IGBT; 0V off; 5V on
	B16	+5V	positive 5V supply generated from 15V

*see Figure 21 for connector pin numbering

GND			reference for high voltage supply (Power-GND, internally connected to GND)
V+HV			positive high voltage supply (up to 400V related to GND_HV)
Load			Output HV half bridge (related to GND_HV) for connecting a test load

Downloaded from Arrow.com.

3 Electrical features

3.1 Supply voltages +5V and +15V

The supply voltage for the driver output (+15V VDD) has to be supplied externally over the dedicated connector. The digital 5V supply voltage is generated internally by an Infineon voltage regulator. The evaluation board does not provide an overvoltage supply monitoring. The user has to ensure therefore that the voltages are in the correct range. Voltages above the maximum values will lead to damages of the IGBT drivers. The availability of the supply voltage +15V is visible over the green status LED.

The high-side gate driver is supplied over the internally ultra-fast bootstrap diode of the 2EDL23I06PJ. To ensure that the bootstrap capacitor is charged before the high side IGBT is switched on, the low side IGBT has to be switched on for a dedicated time of several milliseconds.

3.2 Undervoltage lockout

The +15V supply VDD is monitored by the 2EDL23I06PJ. In case of an undervoltage the driver output is switched off. The thresholds for the low side are typically V_{CCUV+} = 12.5 V (positive going) and V_{CCUV-} = 11.6 V (negative going). The thresholds for the high side are typically V_{BSUV+} = 11.6 V (positive going) and V_{BSUV-} = 10.7 V (negative going). The undervoltage lockout state of the input section is indicated by the /FAULT LED.

3.3 Short circuit detection

The 2EDL23I06PJ provides integrated short circuit detection by measuring the voltage drop over a 20mΩ shunt. If the current reaches a value of typ. 22.7A a short circuit is detected, and the gate driver outputs are switched off. This status is reported by the /FAULT LED. The /FAULT event is latched by the flip-flop according to Figure 3 and must be reset by activating the reset contactor.

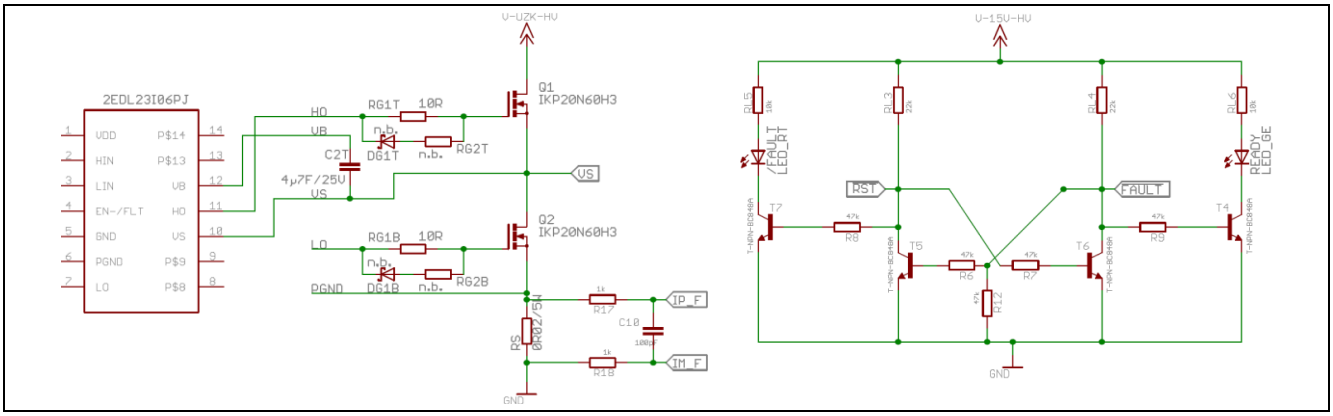

Figure 3 Shunt interface to Opamp and flip-flop latch circuit

Figure 4 shows the signals of the bottom side driver and IGBT during an overcurrent condition. The delay between over current event and output switch off is about 2.2 µs. The FAULT status is latched by an internal logic and must be reset by switching the RESET signal to ground.

Downloaded from Arrow.com.

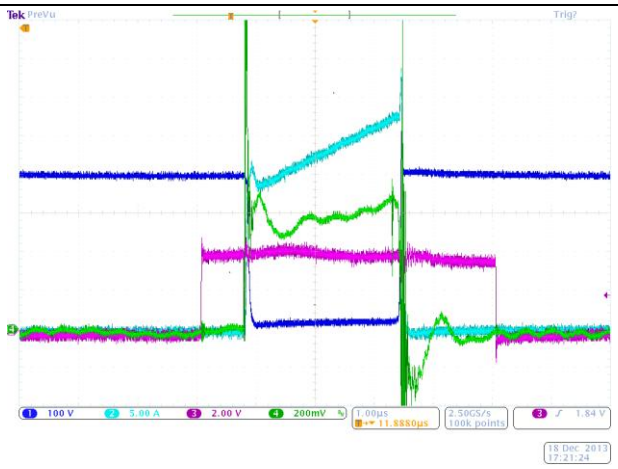

CH1 – V_{CE_bot} 100V/div
CH2 – I_{C_bot} 5A/div
CH3 – V_{LS_input} 2V/div
CH4 – V_{Shunt} 200mV/div

Time 1µs/div

Figure 4 Overcurrent detection signals

3.4 Current amplifier

The EVAL-2EDL23I06PJ provides an operational amplifier which amplifies the voltage drop over the shunt with a gain of 10. The amplified voltage is available for the user at connector X1 pins A9 and B9. The amplified voltage is calculated by the following equation: $V = I_{shunt} \times R_{shunt} \times 10$. Due to inherent component tolerances, the amplifier output should be calibrated in case of using it for a critical current control.

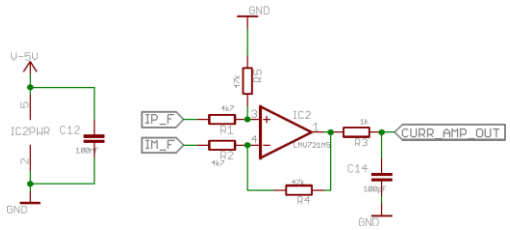

Figure 5 Current amplifier

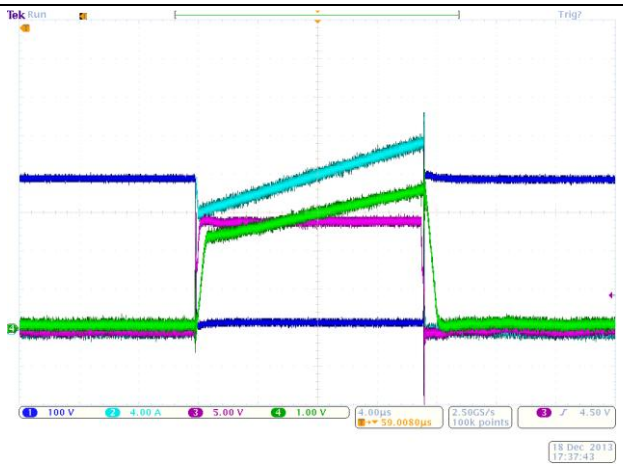

CH1 – V_{CE_bot} 100V/div
CH2 – I_{C_bot} 4A/div
CH3 – V_{GE_bot} 5V/div
CH4 – $V_{Current_amplifier}$ 1V/div

Time 4µs/div

Figure 6 Current amplifier output with collector current

3.5 Deadtime and interlock function

The IC provides a hardware fixed deadtime of typ 380ns. An additional interlock function prevents the two outputs from being activated simultaneously. Hardware deadtime does not block shoot-through. It is a basic item to avoid deep shoot through. The general recommendation for dead time is to be approx. 1µs.

Downloaded from Arrow.com.

3.6 IGBT turn - on / off

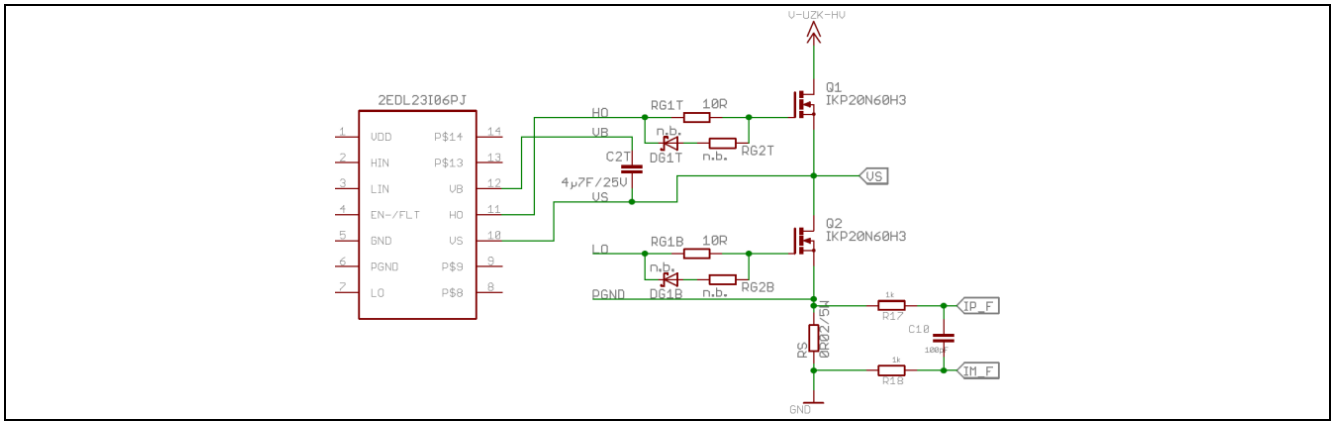

Figure 7 2EDL23I06PJ gate circuit

The switching characteristic of the IGBTs is defined by the gate resistors RG1B, RG1T, RG2B and RG2T according to Figure 7. The resistor values are selected in order to avoid parasitic dv/dt-triggered turn-on. There is the possibility to adapt the switching characteristic to specific applications or to different IGBTs by replacing the values of RG1B and RG1T. The use of RG2B and RG2T together with DG1B and DG1T makes it possible to change the on-switching and the off-switching slopes of the IGBT independent to each other. Please make sure to select an appropriate Schottky diode with sufficient pulse current capability.

The internal deadtime generation of typ. 380ns of the 2EDL23I06PJ ensures that there will be no shoot through between top - and bottom – IGBT. If necessary, a higher deadtime can be generated by the input signals LIN and HIN.

Figure 8 and Figure 9 show typical switching transients for the high side and the low side IGBT.

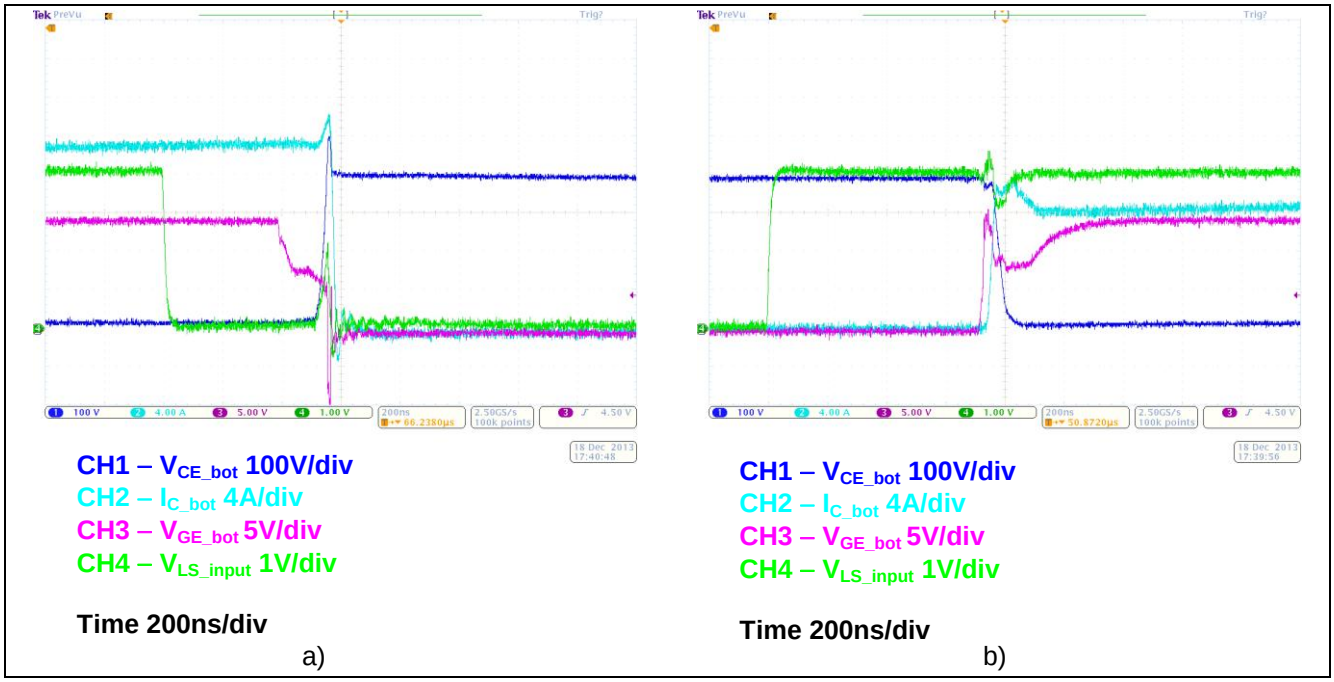

Figure 8 Switching transient of low side IGBT; a) turn-off, b) turn-on

Downloaded from Arrow.com.

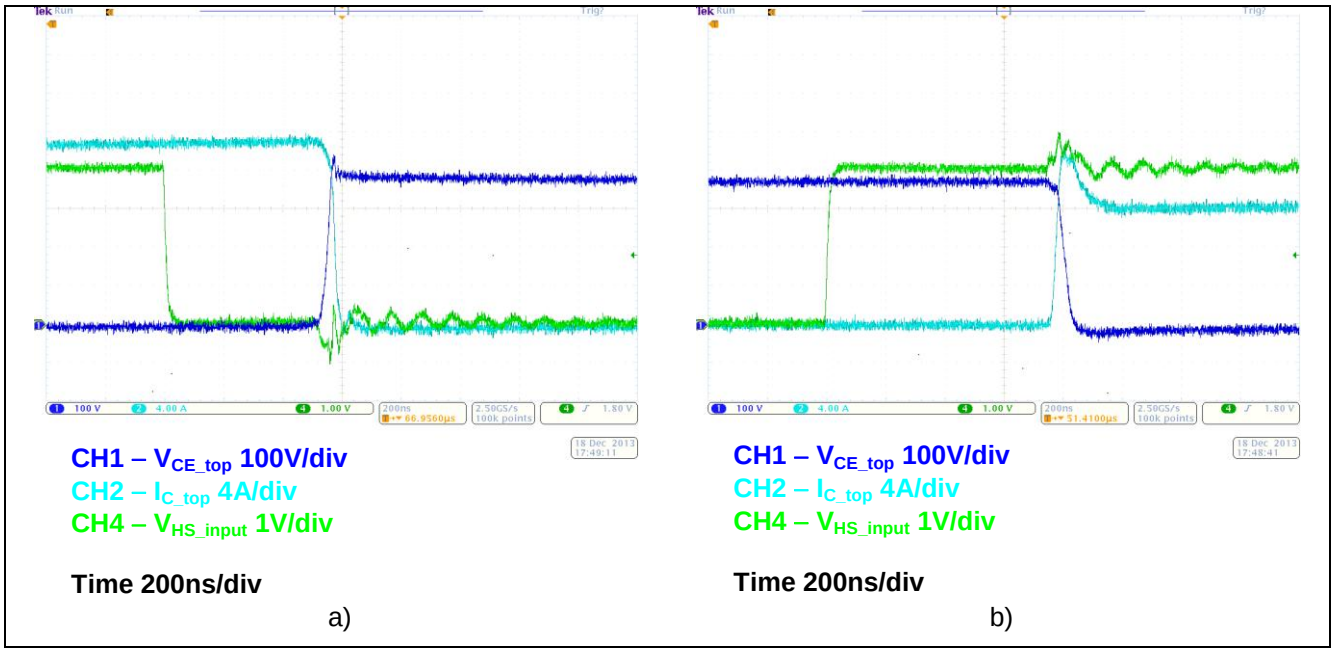

Figure 9 Switching transient of high side IGBT; a) turn-off, b) turn-on

3.7 Input PWM-Signals

There is the possibility to use low pass filters inside the PWM input signals to avoid an undesired turn-on of the IGBT by disturbances. This feature is not used in this evaluation board, but there is the possibility to test it by changing the resistors RIN1T, RIN1B and the capacitors CIN1T, CIN1B. Only the resistors RIN1T and RIN1B are therefore assembled according to Figure 10.

3.8 DC-Link capacitor

Due to the available space there is only a small DC-Link capacitor of 100nF available according to Figure 12. A bigger DC-Link capacitance has to be connected externally to the connectors V+HV and GND_HV to cancel wiring inductances between voltage source and test board.

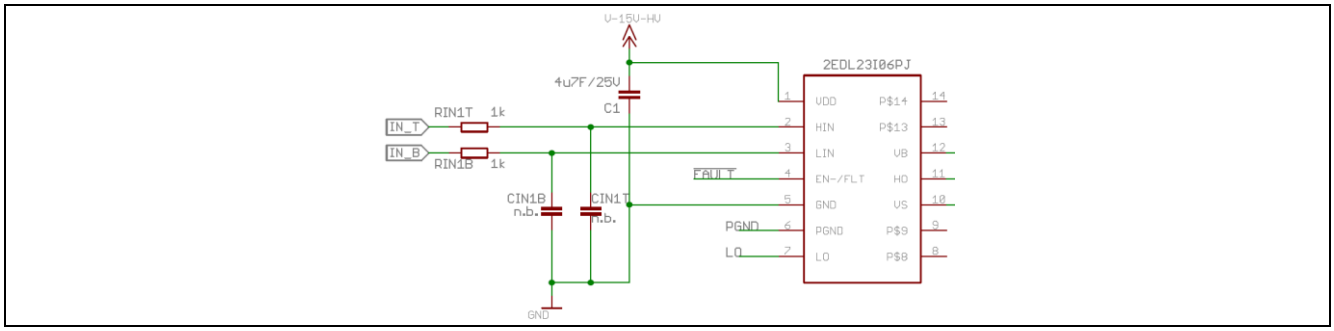

Figure 10 2EDL23I06PJ gate driver input

3.9 Connection of inductive load for non repetitive single or multi pulse measurements

The test board can be used for non-repetitive single or multi pulse measurements. Such kind of measurements help to characterize the switching performance of the used IGBT. **Error! Reference source not found.** shows, how the inductive load must be connected for measuring the high side IGBT in order to keep the overcurrent protection capability.

Downloaded from Arrow.com.

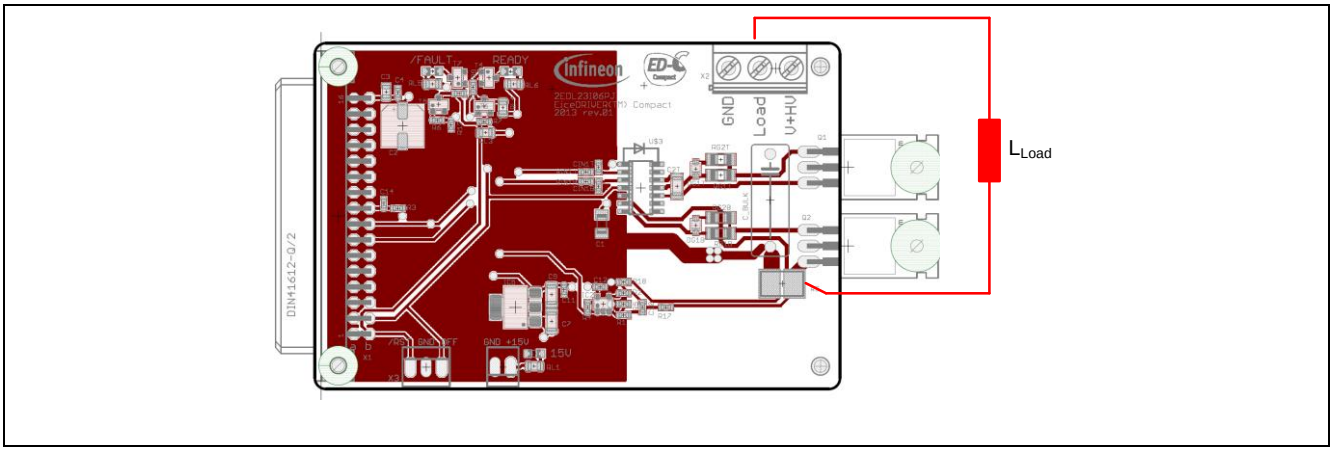

Figure 11 Connection of inductive load

Downloaded from Arrow.com.

4 Board design details

4.1 Schematic

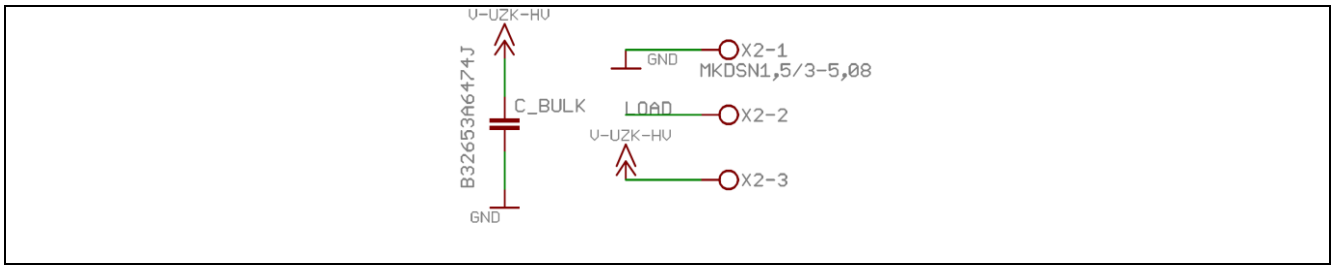

Figure 12 HV supply input and DC-Link

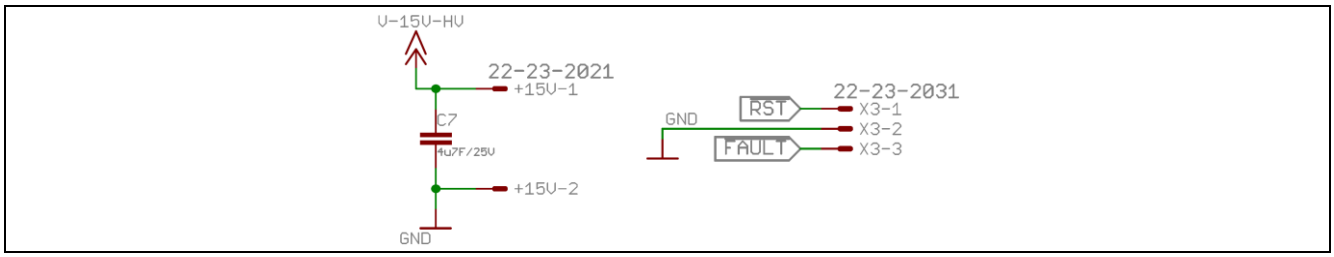

Figure 13 LV Supply and Reset Input

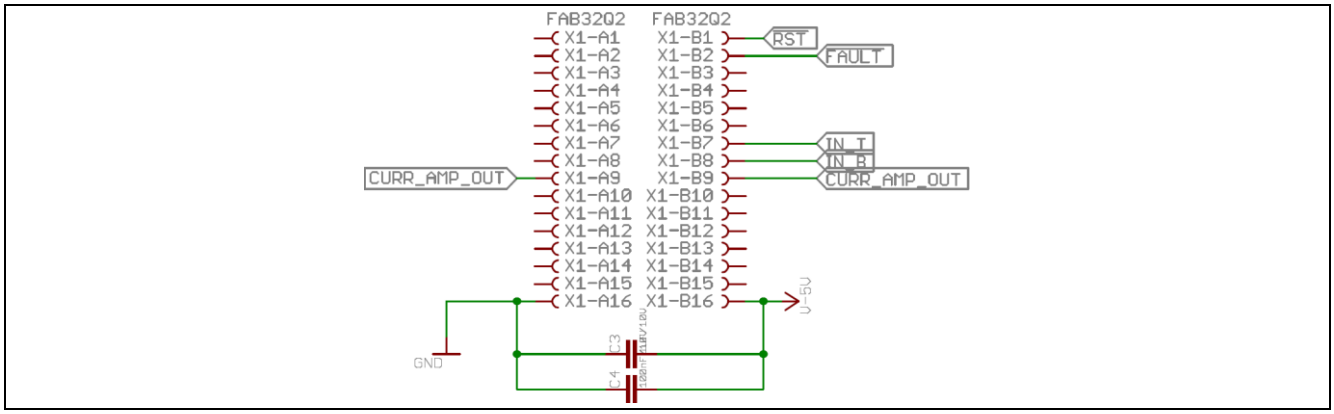

Figure 14 Connector X1

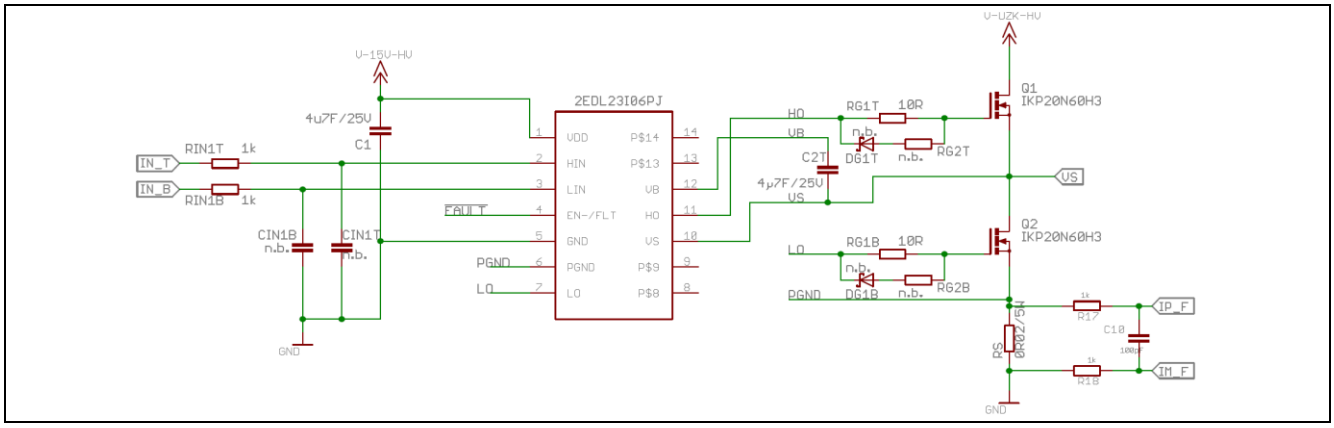

Figure 15 Infineon driver 2EDL23I06PJ with shunt measurement

Downloaded from Arrow.com.

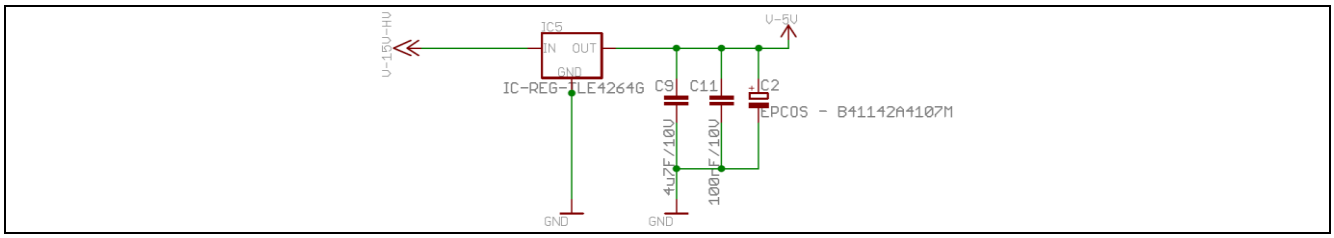

Figure 16 5V voltage regulator

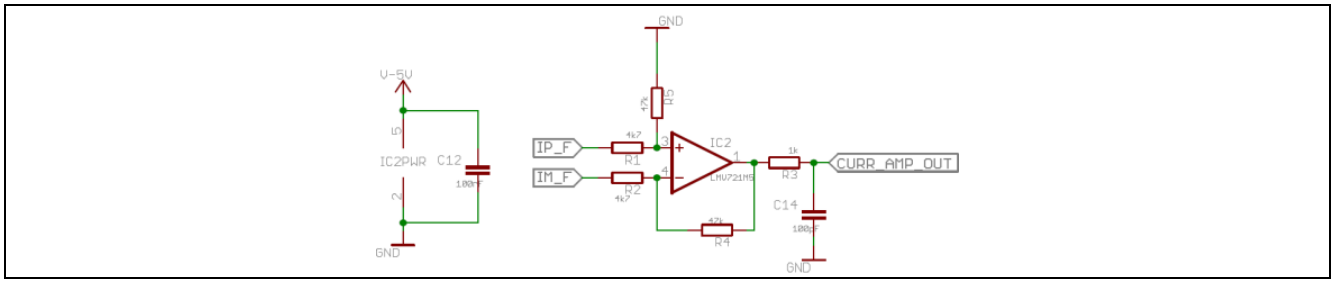

Figure 17 Current amplifier and overcurrent comparator

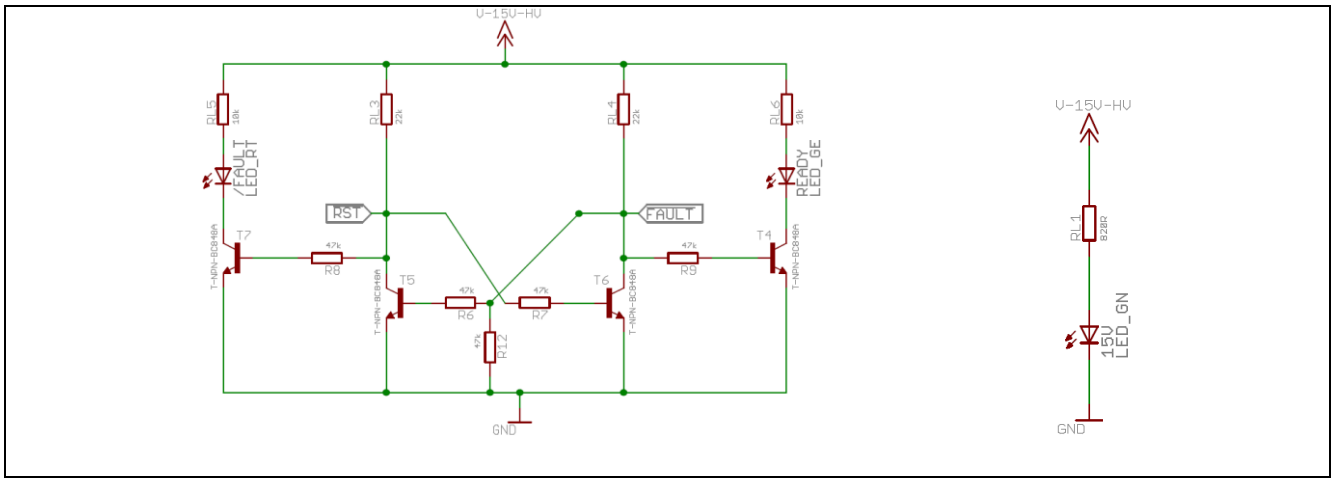

Figure 18 LEDs, FAULT and over current logic

Downloaded from Arrow.com.

4.2 Layout

4.2.1 Layout top layer

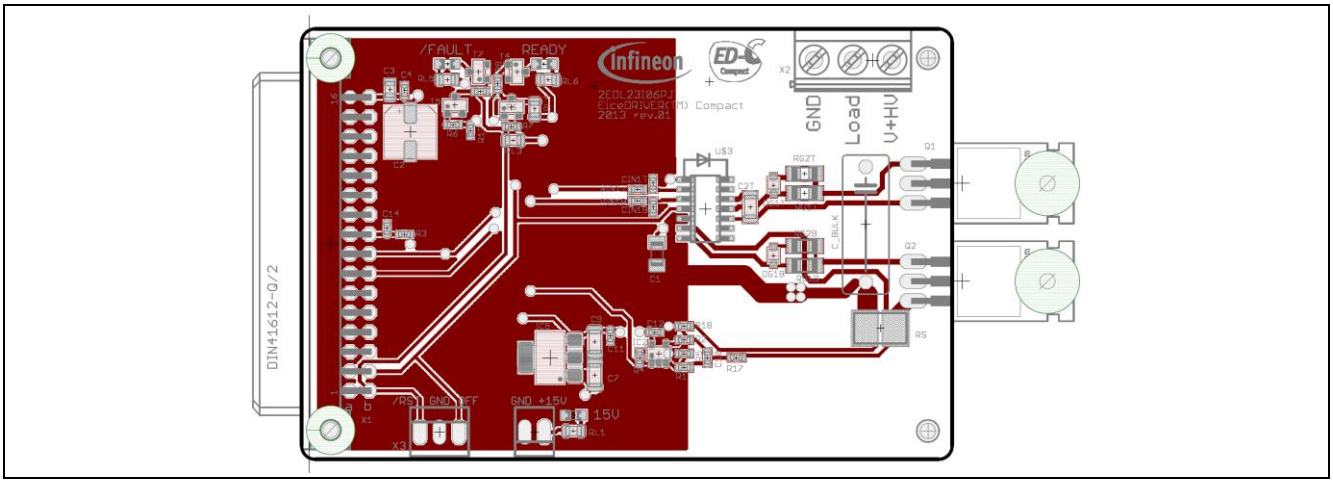

Figure 19 Layout top of the EVAL-2EDL23I06PJ

4.2.2 Layout bottom layer

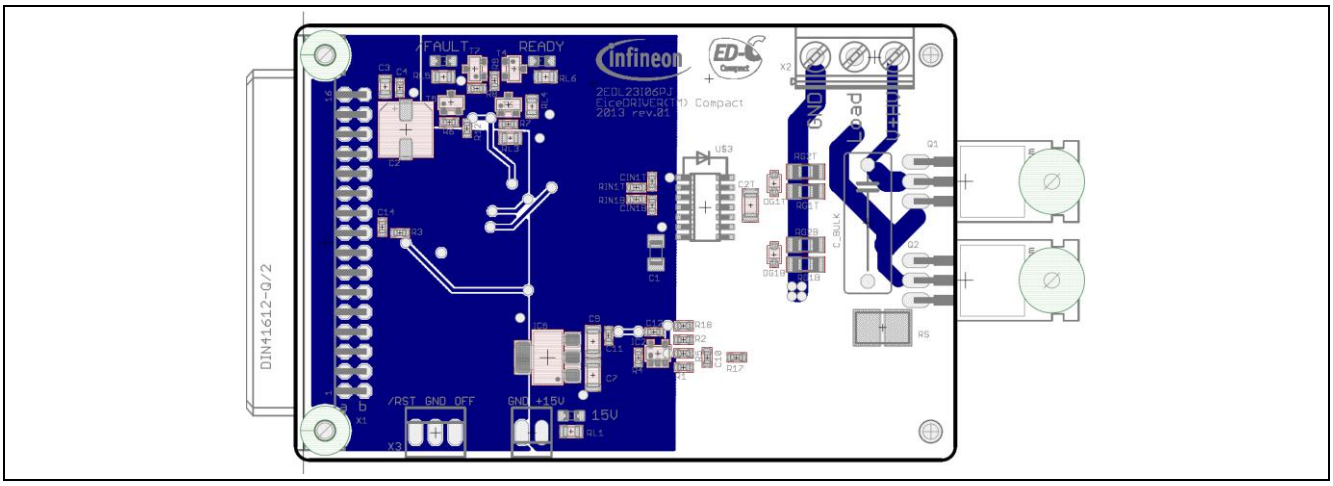

Figure 20 Layout bottom of the EVAL-2EDL23I06PJ

Downloaded from Arrow.com.

4.2.3 Layout top place

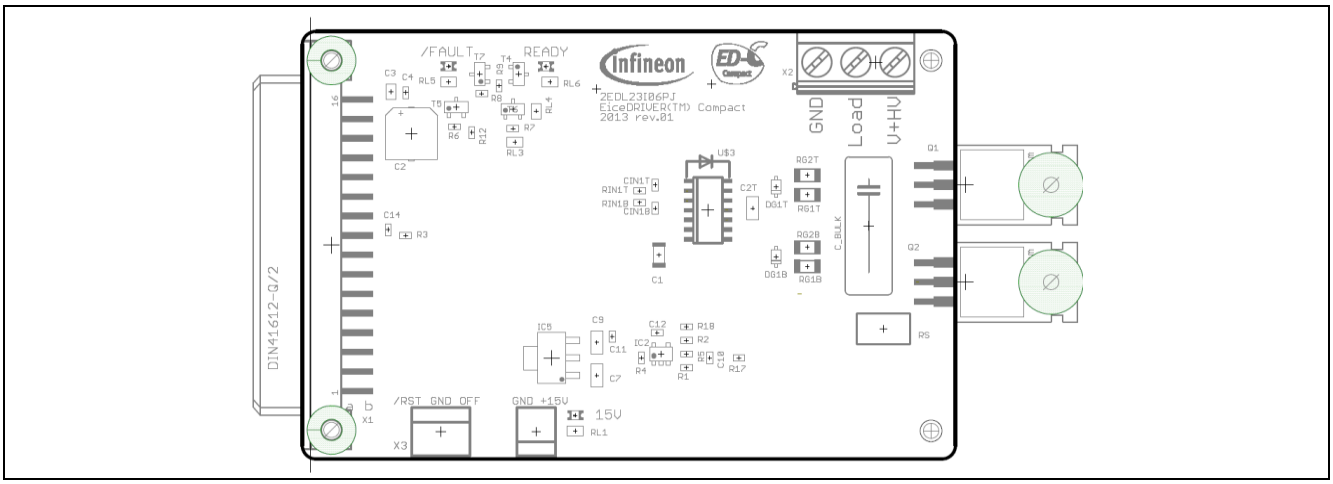

Figure 21 Top place view of the EVAL-2EDL23I06PJ

Downloaded from Arrow.com.

4.3 Bill of material

Part	Value	Package
C_BULK	330nF, 450V	C-EU150-064X183
C1	4u7F/25V	C-EUC1206K
C10, C14	100pF	C-0603
C12	100nF	C-0603
C2	EEEFK1C101P 100µF/16V	SMD-C6.3x7.7
C2T	4µ7F/25V	C-1206
C3	1uF/10V	C-0805
C4, C11	100nF/10V	C-0603
C7	4u7F/25V	C-1206
C9	4u7F/10V	C-1206
IC2	LMV721M5	IC-OP-TSV991AILT
IC5	IC-REG-TLE4264G	SOT223
Q1, Q2	IKP20N60H3	TO220
R1, R2	4k7	R-0603
R3, R17, R18, RIN1B, RIN1T	1k	R-0603
R4, R5, R6, R7, R8, R9, R12	47k	R-0603
RG1B, RG1T	10R	R-EU_R1206
RL1	820R	R-0805
RL3, RL4	22k	R-0805
RL5, RL6	10k	R-0805
RS	0R02/5W	2012
T4, T5, T6, T7	T-NPN-BC848A	T-NPN-BC848A
U$3	2EDL23I06PJ	2EDL_SO14-2_3A
X1	FAB32Q2	FAB32Q2
X2	MKDSN1,5/3-5,08	MKDSN1,5/3-5,08
X3	22-23-2031	22-23-2031
+15V	22-23-2021	22-23-2021
/FAULT	LED_RT	LEDCHIPLED_0805
15V	LED_GN	LEDCHIPLED_0805
READY	LED_GE	LEDCHIPLED_0805

Downloaded from Arrow.com.

w w w . i n f i n e o n . c o m

Published by Infineon Technologies AG

Downloaded from Arrow.com.