Datasheet

Mobile Phone Module Drivers

Uni-directional VCM Driver for Autofocus

BU64292GWZ

General Description

The BU64292GWZ is designed to drive Uni-directional voice coil motors. The driver includes ISRC (Intelligent Slew Rate Control) to reduce mechanical ringing to optimize the camera's autofocus capabilities.

Features

- Constant Current Driver
- 10 bit Resolution Current Control
- ISRC Mechanical Ringing Compensation
- 2-wire Serial Interface
  (I^2C FAST-MODE Plus Compatible)
- Integrated Current Sense Resistor
- Maximum Output Current Selectable

Applications

- Mobile Camera
- Digital Still Camera
- Uni-directional VCM Actuators

Key Specifications

- Power Supply Voltage: 2.5 V to 3.6 V
- Standby Current: 0 µA (Typ)
- Output Resistance: 2.8 Ω (Typ)
- Master Clock: 2 MHz (Typ)
- Output Current: 0 mA to 100 mA, 0 mA to 125 mA
- Operating Temperature Range: -25 °C to +85 °C

Package

Package	W (Typ) x D (Typ) x H (Max)
UCSP25L1(6pin)	0.68 mm x 1.08 mm x 0.3 mm

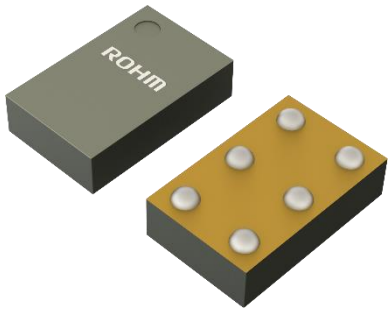

Typical Application Circuit

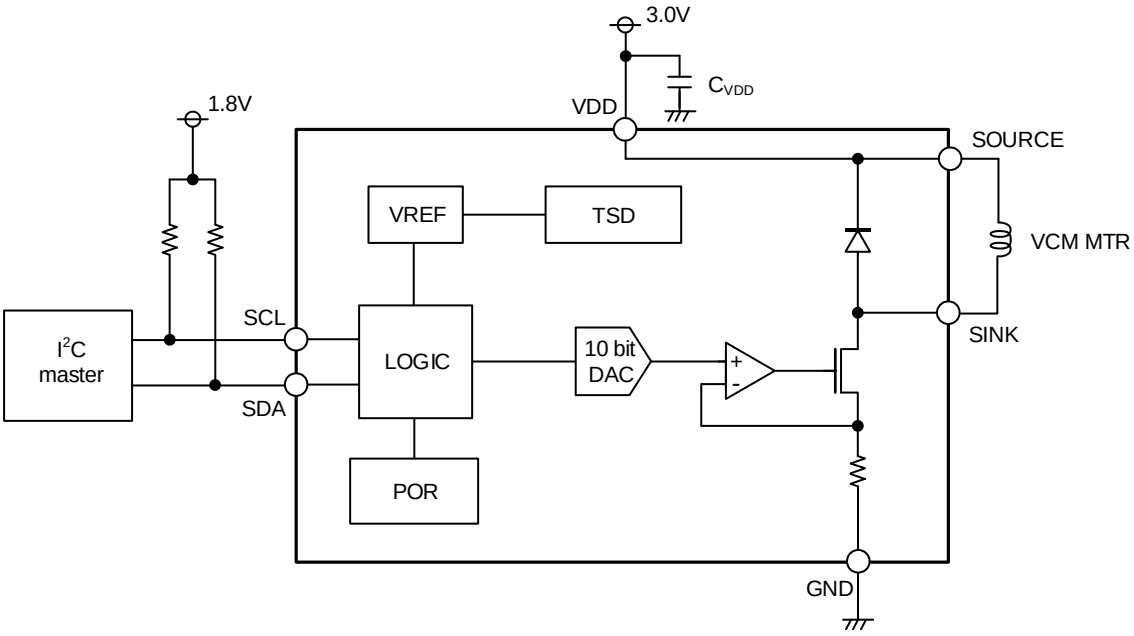

○Product structure : Silicon integrated circuit ○This product has no designed protection against radioactive rays

© 2018 ROHM Co., Ltd. All rights reserved.

Downloaded from Arrow.com.

Pin Configuration

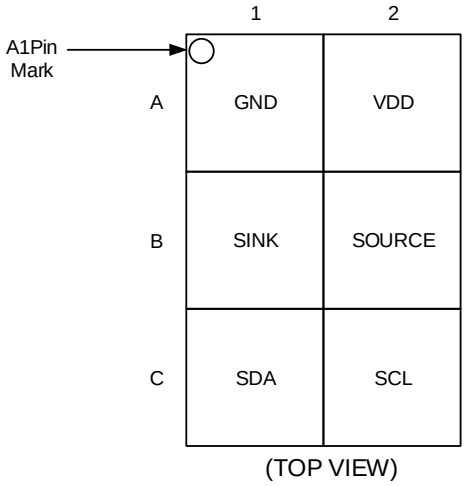

(TOP VIEW)

Pin Description

Pin No.	Pin Name	Function
A1	GND	Ground
A2	VDD	Power supply voltage
B1	SINK	Output -
B2	SOURCE	Output +
C1	SDA	2-wire serial interface data input
C2	SCL	2-wire serial interface clock input

Block Diagram

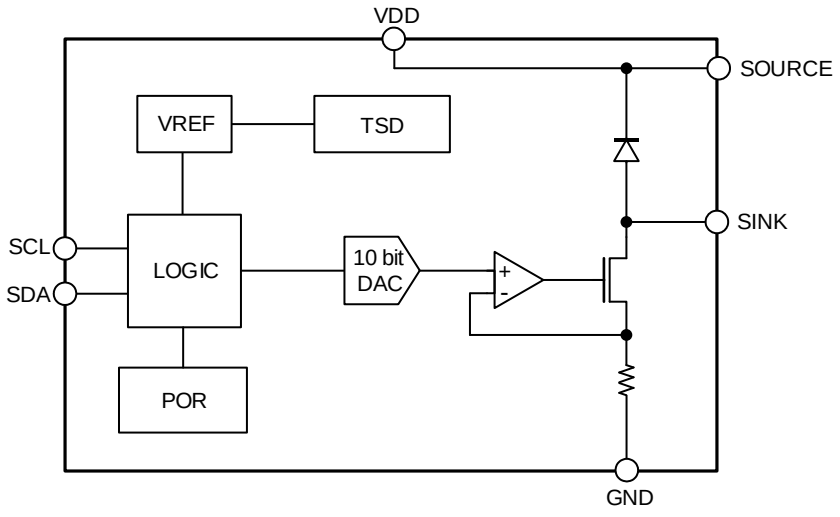

© 2018 ROHM Co., Ltd. All rights reserved.

Downloaded from Arrow.com.

Absolute Maximum Ratings (Ta = 25 °C)

Parameter	Symbol	Rating	Unit
Power Supply Voltage	V_{DD}	-0.3 to +4.5	V
Control Input Voltage*(Note 1)*	V_{IN}	-0.3 to +4.5	V
Power Dissipation*(Note 2)*	Pd	0.27	W
Maximum Junction Temperature	Tjmax	125	°C
Storage Temperature Range	Tstg	-55 to +125	°C
Output Current*(Note 3)*	I_{OUT}	+150	mA

Caution 1: *Operating the IC over the absolute maximum ratings may damage the IC. The damage can either be a short circuit between pins or an open circuit between pins and the internal circuitry. Therefore, it is important to consider circuit protection measures, such as adding a fuse, in case the IC is operated over the absolute maximum ratings.*

Caution 2: *Should by any chance the maximum junction temperature rating be exceeded the rise in temperature of the chip may result in deterioration of the properties of the chip. In case of exceeding this absolute maximum rating, design a PCB with power dissipation taken into consideration by increasing board size and copper area so as not to exceed the maximum junction temperature rating.*

(Note 1) V_{IN} is 2-wire serial interface input pins (SCL, SDA).
(Note 2) UCSP25L1 package. Reduced by 0.27 W/°C when operating above Ta=25 °C (when mounted in ROHM's standard board).
(Note 3) Must not exceed Pd, ASO, or Tjmax=125 °C.

Recommended Operating Conditions

Parameter	Symbol	Rating			Unit
		Min	Typ	Max	
Power Supply Voltage	V_{DD}	2.5	-	3.6	V
Control Input Voltage*(Note 1)*	V_{IN}	0	-	3.6	V
2-wire Serial Interface Frequency	f_{CLK}	0	-	1	MHz
Output Current*(Note 2)*	I_{OUT}	0	100	125	mA
Operating Temperature	Topr	-25	-	+85	°C
Value of VDD Capacitor*(Note 3)*	C_{VDD}	0.5	1.0	-	µF

(Note 1) V_{IN} is 2-wire serial interface input pins (SCL, SDA).
(Note 2) Must not exceed Pd, ASO, or Tjmax=125 °C.
(Note 3) Ceramic capacitor is recommended. The capacitor value including temperature change, DC bias change, and aging change must be larger than minimum value.

© 2018 ROHM Co., Ltd. All rights reserved.

Downloaded from Arrow.com.

Electrical Characteristics

(Unless otherwise specified Ta=25 °C, V_{DD}=3.0 V)

Parameter	Symbol	Limit			Unit	Conditions
		Min	Typ	Max		
Power Consumption						
Standby Current	I_{CCST}	-	0.0	3.0	µA	PS bit = 0, EN bit = 0
Circuit Current	I_{CC}	-	0.45	1.0	mA	PS bit = 1, EN bit = 0
Control Input (V_{IN} = SCL, SDA)						
High Level Input Voltage	V_{INH}	1.5	-	3.6	V	
Low Level Input Voltage	V_{INL}	0	-	0.5	V	
Low Level Output Voltage	V_{INOL}	-	-	0.3	V	I_{IN} = +3 mA (SDA)
High Level Input Current	I_{INH}	-5	-	+5	µA	Input Voltage = 0.9 x V_{IN}
Low Level Input Current	I_{INL}	-5	-	+5	µA	Input Voltage = 0.1 x V_{IN}
Master Clock						
MCLK Accuracy	-	-3	-	+3	%	2 MHz (Typ)
10 Bit D/A Converter (for Control Output Current)						
Resolution	-	-	10	-	bits	
Differential Nonlinearity	-	-1	-	+1	LSB	Target position DAC Code = 0x32 to 0x3CD
Integral Nonlinearity	-	-4	-	+4	LSB	Target position DAC Code = 0x32 to 0x3CD
Output Current Performance						
Output Reference Current	I_{OREF}	95	100	105	mA	Target position DAC Code = 0x3FF
Output Resistance	R_{OUT}	-	2.8	3.8	Ω	

© 2018 ROHM Co., Ltd. All rights reserved.

Downloaded from Arrow.com.

Timing Chart

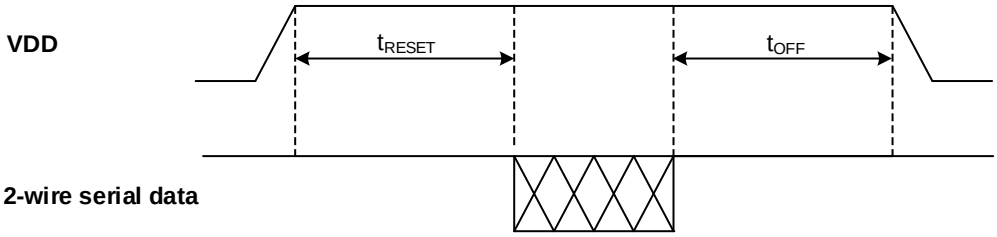

Parameter	Symbol	Min	Typ	Max	Unit
Time from VDD Rise to First Serial Command	t_{RESET}	1.0	-	-	ms
Time Delay of Last Serial Command to VDD Fall	t_{OFF}	0.0	-	-	ms

© 2018 ROHM Co., Ltd. All rights reserved.

Downloaded from Arrow.com.

2-wire Serial BUS Format (FAST-MODE Plus SCL = 1 MHz)

Write mode(R/W = 0)

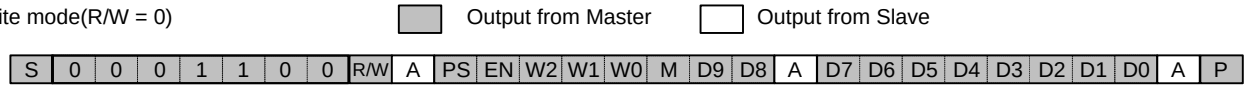

Read mode

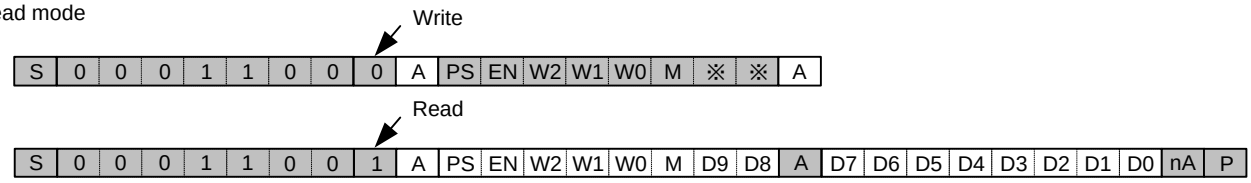

S: start signal P: stop signal

A: acknowledge nA: non acknowledge ※: Don't care

Register Name	Setting Item	Description	Initial Value
R/W	Read/Write Setting	0 = Write to serial registers, 1 = Read from serial registers	0
PS	Serial Power Save	0 = Driver in standby mode, 1 = Driver in operating mode	0
EN	Output Pin Status	0 = Output current set to zero 1 = Constant current drive	0
W[2:0]	Register Address	000 = Output Current [D9:D0]	0x0
		001 = Resonance Frequency [D9:D2], ISRC Mode [D1:D0]	
		010 = Current Mode[D0]	
M	Mode Select Signal	0 = Direct Mode, 1 = ISRC Mode	0
D[9:0]	Output Current	Target position DAC Code [D9:D0]	0x000
	Resonance Frequency	Actuator resonance frequency setting [D9:D2], 0.4 Hz/LSB(0x00 to 0xFF) [D9:D2] = 0x00: 50 Hz [D9:D2] = 0xFF: 152 Hz	0x80
	ISRC Mode	ISRC Setting [D1:D0] [D1:D0] = 0x0: Settling Time ($(1/f_0)$ x 0.48) [D1:D0] = 0x1: Settling Time ($(1/f_0)$ x 0.72) [D1:D0] = 0x2: Settling Time ($(1/f_0)$ x 0.92) [D1:D0] = 0x3: Settling Time ($(1/f_0)$ x 1.20)	0x0
	Current Mode	Max Current Setting [D0] [D0] = 0: Max Output Current = 100 mA [D0] = 1: Max Output Current = 125 mA	0

© 2018 ROHM Co., Ltd. All rights reserved.

Downloaded from Arrow.com.

Characteristics of the SDA and SCL Bus Lines for 2-wire Serial Interface

(Unless otherwise specified Ta = 25 °C, V_{DD} = 2.5 V to 3.6 V)

Parameter	Symbol	FAST-MODE Plus *(Note 1)*		FAST-MODE *(Note 1)*		STANDARD-MODE *(Note 1)*		Unit
		Min	Max	Min	Max	Min	Max	
SCL Clock Frequency	f_{SCL}	-	1000	-	400	-	100	kHz
High Period of the SCL Clock	t_{HIGH}	0.26	-	0.6	-	4.0	-	µs
Low Period of SCL Clock	t_{LOW}	0.5	-	1.3	-	4.7	-	µs
Hold Time (repeated) START Condition	$t_{HD:STA}$	0.26	-	0.6	-	4.0	-	µs
Setup Time (repeated) START Condition	$t_{SU:STA}$	0.26	-	0.6	-	4.7	-	µs
Data Hold Time	$t_{HD:DAT}$	0	0.45	0	0.9	0	3.45	µs
Data Setup Time	$t_{SU:DAT}$	50	-	100	-	250	-	ns
Setup Time for STOP Condition	$t_{SU:STO}$	0.26	-	0.6	-	4.0	-	µs
Bus Free Time between STOP and START Condition	t_{BUF}	0.5	-	1.3	-	4.7	-	µs

(Note 1) STANDARD-MODE, FAST-MODE, and FAST-MODE Plus 2-wire Serial Interface devices must be able to transmit or receive at the designated speed. The maximum bit transfer rates are 100 kbit/s for STANDARD-MODE devices, 400 kbit/s for FAST-MODE devices, and 1 Mbit/s for FAST-MODE Plus devices. This transfer rates are based on the maximum transfer rate. For example, the bus is able to drive 1 Mbit/s clocks with FAST-MODE Plus.

2-wire Serial Interface Timing

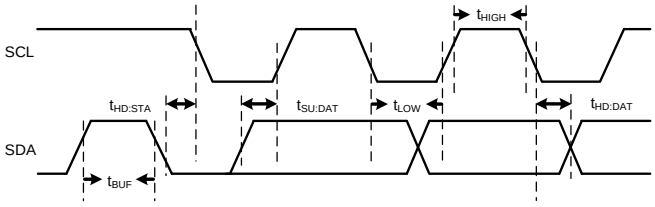

Figure 1. Serial Data Timing

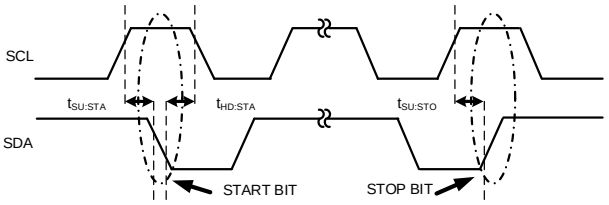

Figure 2. START and STOP Bit Timing

© 2018 ROHM Co., Ltd. All rights reserved.

Downloaded from Arrow.com.

Output Current Setting Method

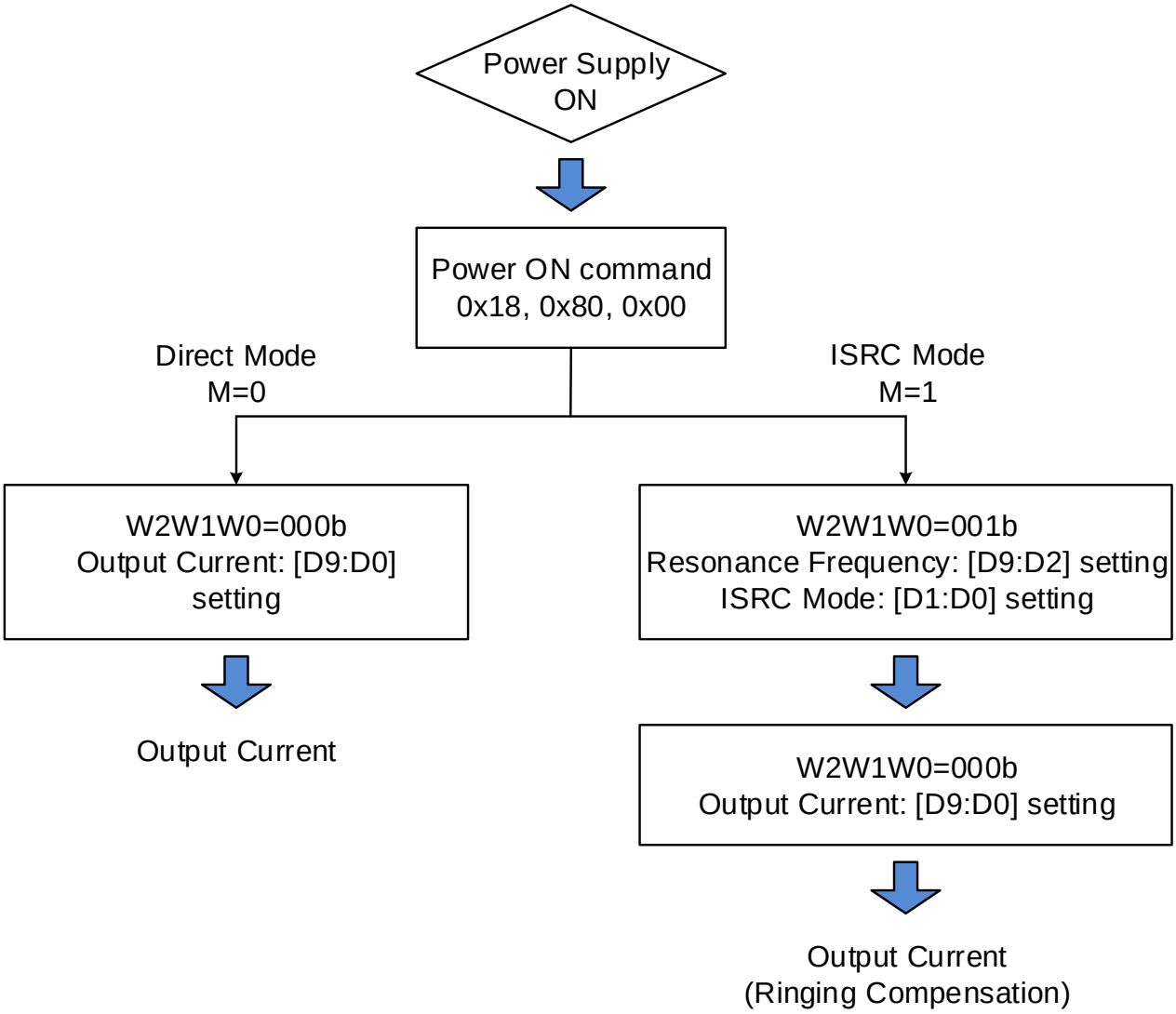

© 2018 ROHM Co., Ltd. All rights reserved.

Downloaded from Arrow.com.

Resonance Frequency Table

Hz	f_0 setting	Hz	f_0 setting	Hz	f_0 setting	Hz	f_0 setting
50.0	00000000	62.8	00100000	75.6	01000000	88.4	01100000
50.4	00000001	63.2	00100001	76.0	01000001	88.8	01100001
50.8	00000010	63.6	00100010	76.4	01000010	89.2	01100010
51.2	00000011	64.0	00100011	76.8	01000011	89.6	01100011
51.6	00000100	64.4	00100100	77.2	01000100	90.0	01100100
52.0	00000101	64.8	00100101	77.6	01000101	90.4	01100101
52.4	00000110	65.2	00100110	78.0	01000110	90.8	01100110
52.8	00000111	65.6	00100111	78.4	01000111	91.2	01100111
53.2	00001000	66.0	00101000	78.8	01001000	91.6	01101000
53.6	00001001	66.4	00101001	79.2	01001001	92.0	01101001
54.0	00001010	66.8	00101010	79.6	01001010	92.4	01101010
54.4	00001011	67.2	00101011	80.0	01001011	92.8	01101011
54.8	00001100	67.6	00101100	80.4	01001100	93.2	01101100
55.2	00001101	68.0	00101101	80.8	01001101	93.6	01101101
55.6	00001110	68.4	00101110	81.2	01001110	94.0	01101110
56.0	00001111	68.8	00101111	81.6	01001111	94.4	01101111
56.4	00010000	69.2	00110000	82.0	01010000	94.8	01110000
56.8	00010001	69.6	00110001	82.4	01010001	95.2	01110001
57.2	00010010	70.0	00110010	82.8	01010010	95.6	01110010
57.6	00010011	70.4	00110011	83.2	01010011	96.0	01110011
58.0	00010100	70.8	00110100	83.6	01010100	96.4	01110100
58.4	00010101	71.2	00110101	84.0	01010101	96.8	01110101
58.8	00010110	71.6	00110110	84.4	01010110	97.2	01110110
59.2	00010111	72.0	00110111	84.8	01010111	97.6	01110111
59.6	00011000	72.4	00111000	85.2	01011000	98.0	01111000
60.0	00011001	72.8	00111001	85.6	01011001	98.4	01111001
60.4	00011010	73.2	00111010	86.0	01011010	98.8	01111010
60.8	00011011	73.6	00111011	86.4	01011011	99.2	01111011
61.2	00011100	74.0	00111100	86.8	01011100	99.6	01111100
61.6	00011101	74.4	00111101	87.2	01011101	100.0	01111101
62.0	00011110	74.8	00111110	87.6	01011110	100.4	01111110
62.4	00011111	75.2	00111111	88.0	01011111	100.8	01111111

© 2018 ROHM Co., Ltd. All rights reserved.

Downloaded from Arrow.com.

Resonance Frequency Table - continued

Hz	f_0 setting	Hz	f_0 setting	Hz	f_0 setting	Hz	f_0 setting
101.2	10000000	114.0	10100000	126.8	11000000	139.6	11100000
101.6	10000001	114.4	10100001	127.2	11000001	140.0	11100001
102.0	10000010	114.8	10100010	127.6	11000010	140.4	11100010
102.4	10000011	115.2	10100011	128.0	11000011	140.8	11100011
102.8	10000100	115.6	10100100	128.4	11000100	141.2	11100100
103.2	10000101	116.0	10100101	128.8	11000101	141.6	11100101
103.6	10000110	116.4	10100110	129.2	11000110	142.0	11100110
104.0	10000111	116.8	10100111	129.6	11000111	142.4	11100111
104.4	10001000	117.2	10101000	130.0	11001000	142.8	11101000
104.8	10001001	117.6	10101001	130.4	11001001	143.2	11101001
105.2	10001010	118.0	10101010	130.8	11001010	143.6	11101010
105.6	10001011	118.4	10101011	131.2	11001011	144.0	11101011
106.0	10001100	118.8	10101100	131.6	11001100	144.4	11101100
106.4	10001101	119.2	10101101	132.0	11001101	144.8	11101101
106.8	10001110	119.6	10101110	132.4	11001110	145.2	11101110
107.2	10001111	120.0	10101111	132.8	11001111	145.6	11101111
107.6	10010000	120.4	10110000	133.2	11010000	146.0	11110000
108.0	10010001	120.8	10110001	133.6	11010001	146.4	11110001
108.4	10010010	121.2	10110010	134.0	11010010	146.8	11110010
108.8	10010011	121.6	10110011	134.4	11010011	147.2	11110011
109.2	10010100	122.0	10110100	134.8	11010100	147.6	11110100
109.6	10010101	122.4	10110101	135.2	11010101	148.0	11110101
110.0	10010110	122.8	10110110	135.6	11010110	148.4	11110110
110.4	10010111	123.2	10110111	136.0	11010111	148.8	11110111
110.8	10011000	123.6	10111000	136.4	11011000	149.2	11111000
111.2	10011001	124.0	10111001	136.8	11011001	149.6	11111001
111.6	10011010	124.4	10111010	137.2	11011010	150.0	11111010
112.0	10011011	124.8	10111011	137.6	11011011	150.4	11111011
112.4	10011100	125.2	10111100	138.0	11011100	150.8	11111100
112.8	10011101	125.6	10111101	138.4	11011101	151.2	11111101
113.2	10011110	126.0	10111110	138.8	11011110	151.6	11111110
113.6	10011111	126.4	10111111	139.2	11011111	152.0	11111111

© 2018 ROHM Co., Ltd. All rights reserved.

Downloaded from Arrow.com.

ISRC Mode Update Timing (Typ)

Following shows ISRC parameters.

Register Address W[2:0]	ISRC Mode D[1:0]	Slew_rate	Settling Time	Function Name
0x1	0x0	0.48 times	$(1/f_0)$ x 0.48	0.48 times control mode
0x1	0x1	0.72 times	$(1/f_0)$ x 0.72	0.72 times control mode
0x1	0x2	0.92 times	$(1/f_0)$ x 0.92	0.92 times control mode
0x1	0x3	1.20 times	$(1/f_0)$ x 1.20	1.20 times control mode

1. Setting 0.48 times control mode
   (1) Limit Current (W[2:0]=0x0) Update Timing
   Settling Time is controlled by the resonance frequency of the actuator and the driver' s slew rate speed setting. This Settling Time is decided by the below Equation 1. Utilize the slew rate speed parameter in order to modify the Settling Time so that any updates to the Limit Current do not occur before the lens has settled.

   $0.70 \times T_0$ [ms] Equation 1

   Where:
   f_0 is the VCM resonance frequency.
   T_0 is the 1 over f_0.
   In case f_0 = 100 Hz, 0.70 × 10 ms = 7 ms

   (2) Slew_rate Update Timing (Change 0.72 times control mode, 0.92 times control mode or 1.20 times control mode)
   Slew_rate update timing is also decided by the Equation 1.
   Take care not to change ISRC Setting D[1:0] earlier than the timing decided by the Equation 1. The accidental current may be happened. However, this accidental current does not exceed maximum output current.

2. Setting 0.72 times control mode
   (1) Limit Current (W[2:0]=0x0) Update Timing
   Settling Time is controlled by the resonance frequency of the actuator and the driver's slew rate speed setting. This Settling Time is decided by the below Equation 2. Utilize the slew rate speed parameter in order to modify the Settling Time so that any updates to the Limit Current do not occur before the lens has settled.

   $0.87 \times T_0$ [ms] Equation 2

   In case f_0 = 100 Hz, 0.87 × 10 ms = 8.7 ms

   (2) Slew_rate Update Timing (Change 0.48 times control mode, 0.92 times control mode or 1.20 times control mode)
   For M = "1", take care not to change ISRC Setting D[1:0] earlier than the timing decided by the Equation 2. The accidental current may be happened. However, this accidental current does not exceed maximum output current.

   It is necessary to change from M = "1" to M = "0" when ISRC Setting D[1:0] is changed after the time obtained by the Equation 2 passes.
   Meanwhile, M = "1" and limit current code are input at the same time after ISRC Setting D[1:0] is updated.

3. Setting 0.92 times control mode
   (1) Limit Current (W[2:0]=0x0) Update Timing
   Settling Time is controlled by the resonance frequency of the actuator and the driver's slew rate speed setting. This Settling Time is decided by the below Equation 3. Utilize the slew rate speed parameter in order to modify the Settling Time so that any updates to the Limit Current do not occur before the lens has settled.

   $1.20 \times T_0$ [ms] Equation 3

   In case f_0 = 100 Hz, 1.20 × 10 ms = 12.0 ms

   (2) Slew_rate Update Timing (Change 0.48 times control mode, 0.72 times control mode or 1.20 times control mode)
   For M = "1", take care not to change ISRC Setting D[1:0] earlier than the timing decided by the Equation 3. the accidental current may be happened. However, this accidental current does not exceed maximum output current.

   It is necessary to change from M = "1" to M = "0" when ISRC Setting D[1:0] is changed after the time obtained by the Equation 3 passes.
   Meanwhile, M = "1" and limit current code are input at the same time after ISRC Setting D[1:0] is updated.

© 2018 ROHM Co., Ltd. All rights reserved.

Downloaded from Arrow.com.

ISRC Mode Update Timing (Typ) - continued

4. Setting 1.20 times control mode
   (1) Limit Current (W[2:0]=0x0) Update Timing
   Settling Time is controlled by the resonance frequency of the actuator and the driver's slew rate speed setting.

   This Settling Time is decided by the below Equation 4. Utilize the slew rate speed parameter in order to modify the Settling Time so that any updates to the Limit Current do not occur before the lens has settled.

   $1.60 \times T_0$ [ms] Equation 4

   In case f_0 = 100 Hz, 1.60 × 10 ms = 16.0 ms

   (2) Slew_rate Update Timing (Change 0.48 times control mode, 0.72 times control mode or 0.92 times control mode)
   For M = "1", take care not to change ISRC Setting D[1:0] earlier than the timing decided by the Equation 4. The accidental current may be happened. However, this accidental current does not exceed maximum output current.

   It is necessary to change from M = "1" to M = "0" when ISRC Setting D[1:0] is changed after the time obtained by the Equation 4 passes.
   Meanwhile, M = "1" and limit current code are input at the same time after ISRC Setting D[1:0] is updated.

© 2018 ROHM Co., Ltd. All rights reserved.

Downloaded from Arrow.com.

I/O Equivalence Circuit

VDD,SOURCE	SCL	SDA
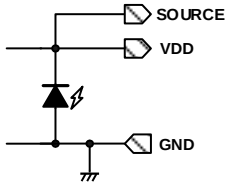	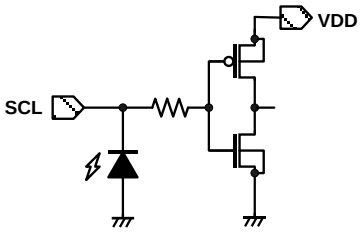	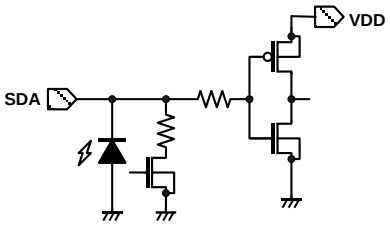
SINK	-	-
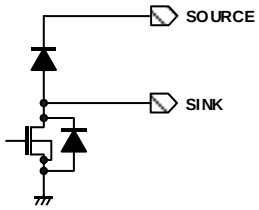	-	-

© 2018 ROHM Co., Ltd. All rights reserved.

Downloaded from Arrow.com.

Operational Notes

1. **Reverse Connection of Power Supply**
   Connecting the power supply in reverse polarity can damage the IC. Take precautions against reverse polarity when connecting the power supply, such as mounting an external diode between the power supply and the IC's power supply pins.

2. **Power Supply Lines**
   Design the PCB layout pattern to provide low impedance supply lines. Furthermore, connect a capacitor to ground at all power supply pins. Consider the effect of temperature and aging on the capacitance value when using electrolytic capacitors.

3. **Ground Voltage**
   Ensure that no pins are at a voltage below that of the ground pin at any time, even during transient condition.

4. **Ground Wiring Pattern**
   When using both small-signal and large-current ground traces, the two ground traces should be routed separately but connected to a single ground at the reference point of the application board to avoid fluctuations in the small-signal ground caused by large currents. Also ensure that the ground traces of external components do not cause variations on the ground voltage. The ground lines must be as short and thick as possible to reduce line impedance.

5. **Recommended Operating Conditions**
   The function and operation of the IC are guaranteed within the range specified by the recommended operating conditions. The characteristic values are guaranteed only under the conditions of each item specified by the electrical characteristics.

6. **Inrush Current**
   When power is first supplied to the IC, it is possible that the internal logic may be unstable and inrush current may flow instantaneously due to the internal powering sequence and delays, especially if the IC has more than one power supply. Therefore, give special consideration to power coupling capacitance, power wiring, width of ground wiring, and routing of connections.

7. **Testing on Application Boards**
   When testing the IC on an application board, connecting a capacitor directly to a low-impedance output pin may subject the IC to stress. Always discharge capacitors completely after each process or step. The IC's power supply should always be turned off completely before connecting or removing it from the test setup during the inspection process. To prevent damage from static discharge, ground the IC during assembly and use similar precautions during transport and storage.

8. **Inter-pin Short and Mounting Errors**
   Ensure that the direction and position are correct when mounting the IC on the PCB. Incorrect mounting may result in damaging the IC. Avoid nearby pins being shorted to each other especially to ground, power supply and output pin. Inter-pin shorts could be due to many reasons such as metal particles, water droplets (in very humid environment) and unintentional solder bridge deposited in between pins during assembly to name a few.

9. **Unused Input Pins**
   Input pins of an IC are often connected to the gate of a MOS transistor. The gate has extremely high impedance and extremely low capacitance. If left unconnected, the electric field from the outside can easily charge it. The small charge acquired in this way is enough to produce a significant effect on the conduction through the transistor and cause unexpected operation of the IC. So unless otherwise specified, unused input pins should be connected to the power supply or ground line.

10. **Regarding the Input Pin of the IC**
    In the construction of this IC, P-N junctions are inevitably formed creating parasitic diodes or transistors. The operation of these parasitic elements can result in mutual interference among circuits, operational faults, or physical damage. Therefore, conditions which cause these parasitic elements to operate, such as applying a voltage to an input pin lower than the ground voltage should be avoided. Furthermore, do not apply a voltage to the input pins when no power supply voltage is applied to the IC. Even if the power supply voltage is applied, make sure that the input pins have voltages within the values specified in the electrical characteristics of this IC.

11. **Ceramic Capacitor**
    When using a ceramic capacitor, determine a capacitance value considering the change of capacitance with temperature and the decrease in nominal capacitance due to DC bias and others.

© 2018 ROHM Co., Ltd. All rights reserved.

Downloaded from Arrow.com.

Operational Notes – continued

12. Thermal Shutdown Circuit(TSD)

This IC has a built-in thermal shutdown circuit that prevents heat damage to the IC. Normal operation should always be within the IC's maximum junction temperature rating. If however the rating is exceeded for a continued period, the junction temperature (Tj) will rise which will activate the TSD circuit that will turn OFF power output pins. When the Tj falls below the TSD threshold, the circuits are automatically restored to normal operation.

Note that the TSD circuit operates in a situation that exceeds the absolute maximum ratings and therefore, under no circumstances, should the TSD circuit be used in a set design or for any purpose other than protecting the IC from heat damage.

13. Disturbance Light

In a device where a portion of silicon is exposed to light such as in a WL-CSP and chip products, IC characteristics may be affected due to photoelectric effect. For this reason, it is recommended to come up with countermeasures that will prevent the chip from being exposed to light.

© 2018 ROHM Co., Ltd. All rights reserved.

Downloaded from Arrow.com.

Ordering Information

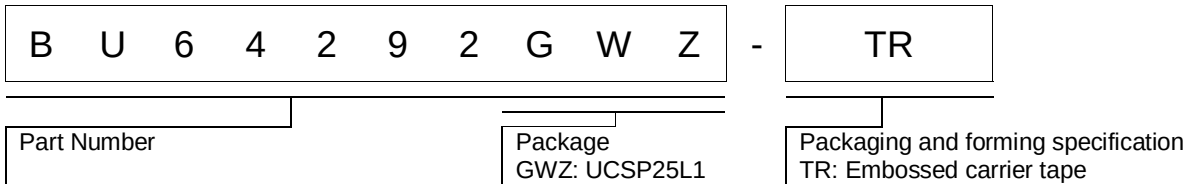

Marking Diagram (TOP VIEW)

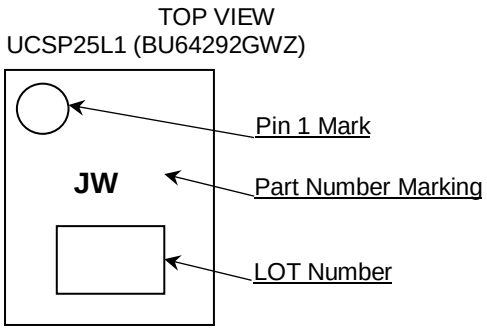

© 2018 ROHM Co., Ltd. All rights reserved.

Downloaded from Arrow.com.

Physical Dimension and Packing Information

Package Name	UCSP25L1 (BU64292GWZ)

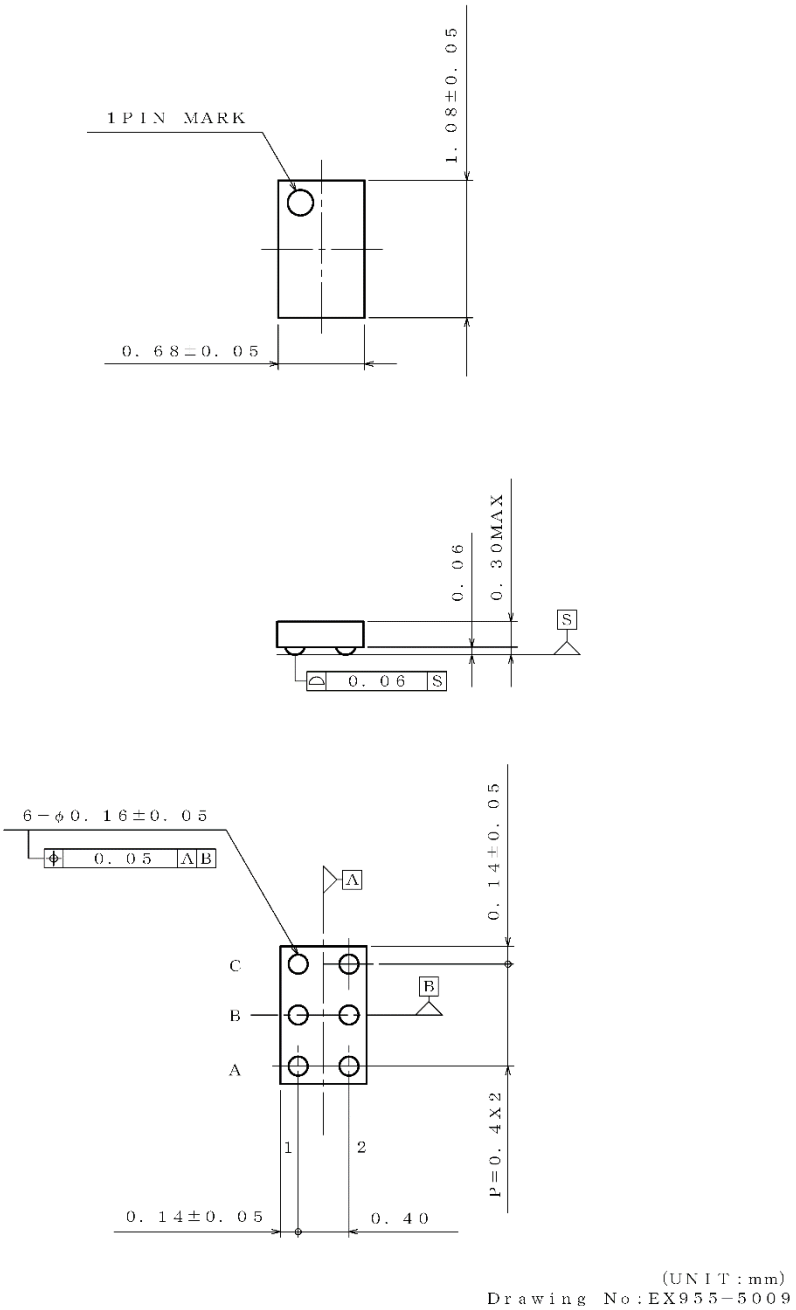

(UNIT : mm)
Drawing No : EX955−5009

< Tape and Reel Information >

Tape	Embossed carrier tape
Quantity	6000pcs
Direction of feed	TR The direction is the pin 1 of product is at the upper right when you hold reel on the left hand and you pull out the tape on the right hand

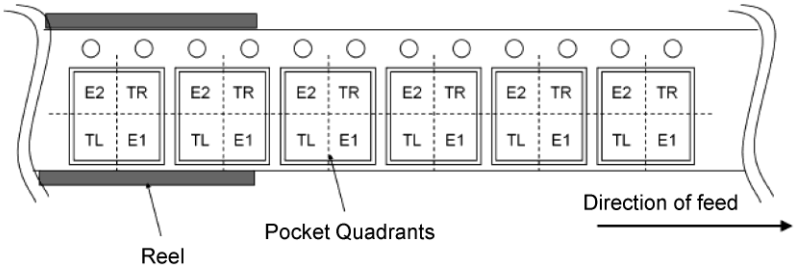

© 2018 ROHM Co., Ltd. All rights reserved.

Downloaded from Arrow.com.

Revision History

Date	Revision	Changes
18. Oct. 2018	001	New release
12. Dec. 2018	002	(1) page1 Changed the package image.

© 2018 ROHM Co., Ltd. All rights reserved.

Downloaded from Arrow.com.

Notice

Precaution on using ROHM Products

1. Our Products are designed and manufactured for application in ordinary electronic equipment (such as AV equipment, OA equipment, telecommunication equipment, home electronic appliances, amusement equipment, etc.). If you intend to use our Products in devices requiring extremely high reliability (such as medical equipment (Note 1), transport equipment, traffic equipment, aircraft/spacecraft, nuclear power controllers, fuel controllers, car equipment including car accessories, safety devices, etc.) and whose malfunction or failure may cause loss of human life, bodily injury or serious damage to property ("Specific Applications"), please consult with the ROHM sales representative in advance. Unless otherwise agreed in writing by ROHM in advance, ROHM shall not be in any way responsible or liable for any damages, expenses or losses incurred by you or third parties arising from the use of any ROHM's Products for Specific Applications.

(Note1) Medical Equipment Classification of the Specific Applications

JAPAN	USA	EU	CHINA
CLASSⅢ	CLASSⅢ	CLASSⅡb	CLASSⅢ
CLASSⅣ		CLASSⅢ	

2. ROHM designs and manufactures its Products subject to strict quality control system. However, semiconductor products can fail or malfunction at a certain rate. Please be sure to implement, at your own responsibilities, adequate safety measures including but not limited to fail-safe design against the physical injury, damage to any property, which a failure or malfunction of our Products may cause. The following are examples of safety measures:
   [a] Installation of protection circuits or other protective devices to improve system safety
   [b] Installation of redundant circuits to reduce the impact of single or multiple circuit failure

3. Our Products are designed and manufactured for use under standard conditions and not under any special or extraordinary environments or conditions, as exemplified below. Accordingly, ROHM shall not be in any way responsible or liable for any damages, expenses or losses arising from the use of any ROHM's Products under any special or extraordinary environments or conditions. If you intend to use our Products under any special or extraordinary environments or conditions (as exemplified below), your independent verification and confirmation of product performance, reliability, etc, prior to use, must be necessary:
   [a] Use of our Products in any types of liquid, including water, oils, chemicals, and organic solvents
   [b] Use of our Products outdoors or in places where the Products are exposed to direct sunlight or dust
   [c] Use of our Products in places where the Products are exposed to sea wind or corrosive gases, including Cl_2, H_2S, NH_3, SO_2, and NO_2
   [d] Use of our Products in places where the Products are exposed to static electricity or electromagnetic waves
   [e] Use of our Products in proximity to heat-producing components, plastic cords, or other flammable items
   [f] Sealing or coating our Products with resin or other coating materials
   [g] Use of our Products without cleaning residue of flux (Exclude cases where no-clean type fluxes is used. However, recommend sufficiently about the residue.) ; or Washing our Products by using water or water-soluble cleaning agents for cleaning residue after soldering
   [h] Use of the Products in places subject to dew condensation

4. The Products are not subject to radiation-proof design.

5. Please verify and confirm characteristics of the final or mounted products in using the Products.

6. In particular, if a transient load (a large amount of load applied in a short period of time, such as pulse, is applied, confirmation of performance characteristics after on-board mounting is strongly recommended. Avoid applying power exceeding normal rated power; exceeding the power rating under steady-state loading condition may negatively affect product performance and reliability.

7. De-rate Power Dissipation depending on ambient temperature. When used in sealed area, confirm that it is the use in the range that does not exceed the maximum junction temperature.

8. Confirm that operation temperature is within the specified range described in the product specification.

9. ROHM shall not be in any way responsible or liable for failure induced under deviant condition from what is defined in this document.

Precaution for Mounting / Circuit board design

1. When a highly active halogenous (chlorine, bromine, etc.) flux is used, the residue of flux may negatively affect product performance and reliability.

2. In principle, the reflow soldering method must be used on a surface-mount products, the flow soldering method must be used on a through hole mount products. If the flow soldering method is preferred on a surface-mount products, please consult with the ROHM representative in advance.

For details, please refer to ROHM Mounting specification

© 2015 ROHM Co., Ltd. All rights reserved.

Downloaded from Arrow.com.

Precautions Regarding Application Examples and External Circuits

1. If change is made to the constant of an external circuit, please allow a sufficient margin considering variations of the characteristics of the Products and external components, including transient characteristics, as well as static characteristics.

2. You agree that application notes, reference designs, and associated data and information contained in this document are presented only as guidance for Products use. Therefore, in case you use such information, you are solely responsible for it and you must exercise your own independent verification and judgment in the use of such information contained in this document. ROHM shall not be in any way responsible or liable for any damages, expenses or losses incurred by you or third parties arising from the use of such information.

Precaution for Electrostatic

This Product is electrostatic sensitive product, which may be damaged due to electrostatic discharge. Please take proper caution in your manufacturing process and storage so that voltage exceeding the Products maximum rating will not be applied to Products. Please take special care under dry condition (e.g. Grounding of human body / equipment / solder iron, isolation from charged objects, setting of Ionizer, friction prevention and temperature / humidity control).

Precaution for Storage / Transportation

1. Product performance and soldered connections may deteriorate if the Products are stored in the places where:
   - [a] the Products are exposed to sea winds or corrosive gases, including Cl_2, H_2S, NH_3, SO_2, and NO_2
   - [b] the temperature or humidity exceeds those recommended by ROHM
   - [c] the Products are exposed to direct sunshine or condensation
   - [d] the Products are exposed to high Electrostatic

2. Even under ROHM recommended storage condition, solderability of products out of recommended storage time period may be degraded. It is strongly recommended to confirm solderability before using Products of which storage time is exceeding the recommended storage time period.

3. Store / transport cartons in the correct direction, which is indicated on a carton with a symbol. Otherwise bent leads may occur due to excessive stress applied when dropping of a carton.

4. Use Products within the specified time after opening a humidity barrier bag. Baking is required before using Products of which storage time is exceeding the recommended storage time period.

Precaution for Product Label

A two-dimensional barcode printed on ROHM Products label is for ROHM's internal use only.

Precaution for Disposition

When disposing Products please dispose them properly using an authorized industry waste company.

Precaution for Foreign Exchange and Foreign Trade act

Since concerned goods might be fallen under listed items of export control prescribed by Foreign exchange and Foreign trade act, please consult with ROHM in case of export.

Precaution Regarding Intellectual Property Rights

1. All information and data including but not limited to application example contained in this document is for reference only. ROHM does not warrant that foregoing information or data will not infringe any intellectual property rights or any other rights of any third party regarding such information or data.

2. ROHM shall not have any obligations where the claims, actions or demands arising from the combination of the Products with other articles such as components, circuits, systems or external equipment (including software).

3. No license, expressly or implied, is granted hereby under any intellectual property rights or other rights of ROHM or any third parties with respect to the Products or the information contained in this document. Provided, however, that ROHM will not assert its intellectual property rights or other rights against you or your customers to the extent necessary to manufacture or sell products containing the Products, subject to the terms and conditions herein.

Other Precaution

1. This document may not be reprinted or reproduced, in whole or in part, without prior written consent of ROHM.

2. The Products may not be disassembled, converted, modified, reproduced or otherwise changed without prior written consent of ROHM.

3. In no event shall you use in any way whatsoever the Products and the related technical information contained in the Products or this document for any military purposes, including but not limited to, the development of mass-destruction weapons.

4. The proper names of companies or products described in this document are trademarks or registered trademarks of ROHM, its affiliated companies or third parties.

© 2015 ROHM Co., Ltd. All rights reserved.

Downloaded from Arrow.com.

General Precaution

1. Before you use our Products, you are requested to carefully read this document and fully understand its contents. ROHM shall not be in any way responsible or liable for failure, malfunction or accident arising from the use of any ROHM's Products against warning, caution or note contained in this document.

2. All information contained in this document is current as of the issuing date and subject to change without any prior notice. Before purchasing or using ROHM's Products, please confirm the latest information with a ROHM sales representative.

3. The information contained in this document is provided on an "as is" basis and ROHM does not warrant that all information contained in this document is accurate and/or error-free. ROHM shall not be in any way responsible or liable for any damages, expenses or losses incurred by you or third parties resulting from inaccuracy or errors of or concerning such information.

© 2015 ROHM Co., Ltd. All rights reserved.

Downloaded from Arrow.com.