Sep.1.2025 Copyright 2025 HIROSE ELECTRIC CO., LTD. All Rights Reserved.
In case of consideration for using Automotive equipment / device which demand high reliability, kindly contact our sales window correspondents.

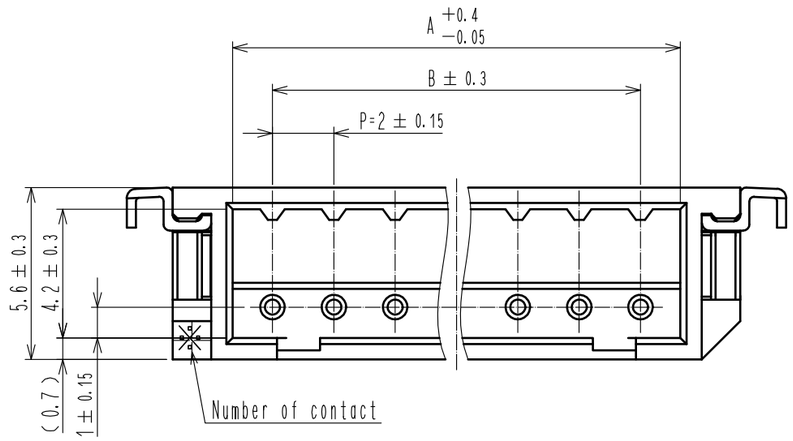

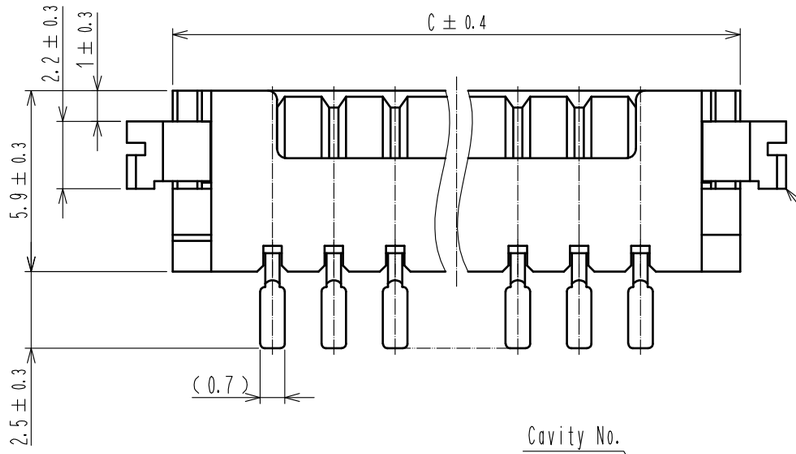

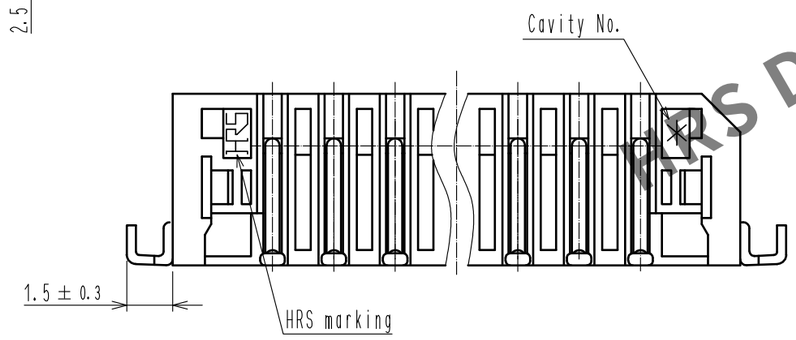

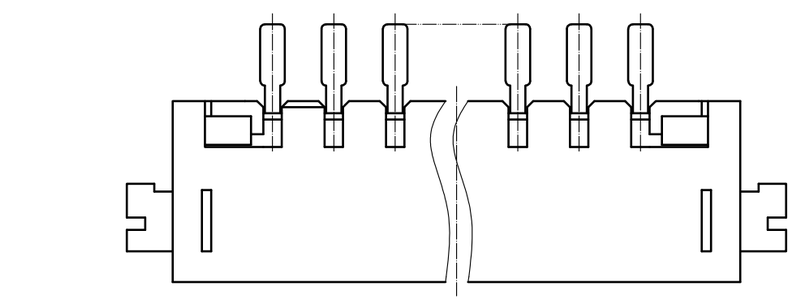

Mated connectors

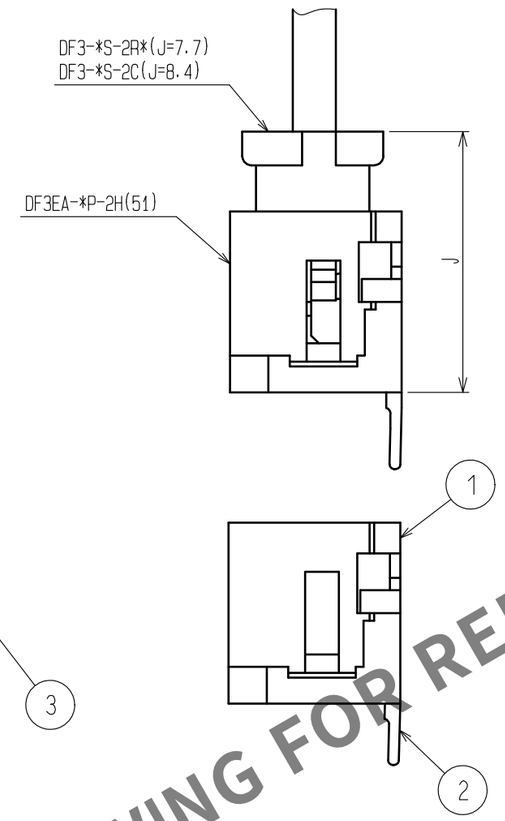

1 Configuration of 2 to 6 position

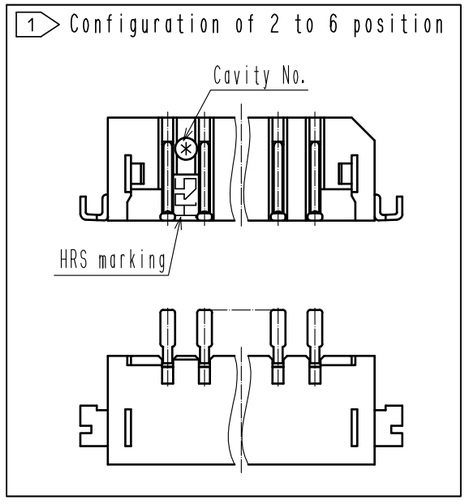

1 Recommended pattern

Outline of connector

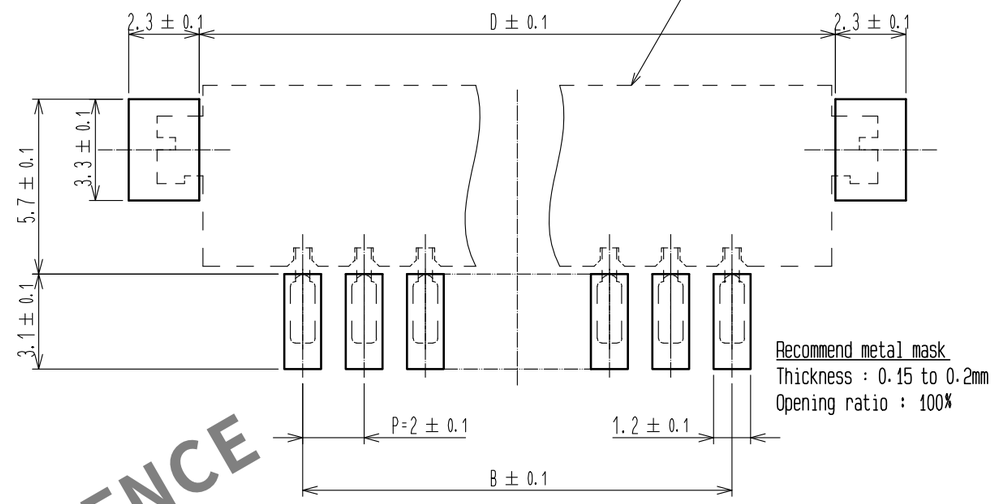

Recommend metal mask
Thickness : 0.15 to 0.2mm
Opening ratio : 100%

Part No.	Code No.	A	B	C	D
DF3EA- 2P-2H(51)	CL543-0329-0-51	4.6	2.0	8.5	8.74
DF3EA- 3P-2H(51)	CL543-0330-0-51	6.6	4.0	10.5	10.74
DF3EA- 4P-2H(51)	CL543-0331-0-51	8.6	6.0	12.5	12.74
DF3EA- 5P-2H(51)	CL543-0332-0-51	10.6	8.0	14.5	14.74
DF3EA- 6P-2H(51)	CL543-0333-0-51	12.6	10.0	16.5	16.74
DF3EA- 7P-2H(51)	CL543-0334-0-51	14.6	12.0	18.5	18.74
DF3EA- 8P-2H(51)	CL543-0335-0-51	16.6	14.0	20.5	20.74
DF3EA- 9P-2H(51)	CL543-0336-0-51	18.6	16.0	22.5	22.74
DF3EA-10P-2H(51)	CL543-0337-0-51	20.6	18.0	24.5	24.74
DF3EA-11P-2H(51)	CL543-0338-0-51	22.6	20.0	26.5	26.74
DF3EA-12P-2H(51)	CL543-0339-0-51	24.6	22.0	28.5	28.74
DF3EA-13P-2H(51)	CL543-0340-0-51	26.6	24.0	30.5	30.74
DF3EA-14P-2H(51)	CL543-0341-0-51	28.6	26.0	32.5	32.74
DF3EA-15P-2H(51)	CL543-0342-0-51	30.6	28.0	34.5	34.74

Notes 1 It shows configuration of 2 to 6 position.
2. Lead co-planarity include reinforced metal fittings shall be 0.1mm MAX.

HRS DRAWING FOR REFERENCE

NO.	MATERIAL	FINISH , REMARKS
2	Brass	Surface:Gold plated 0.2μm MIN Under plating:Nickel plated 1μm MIN
1	Polyamide	Natural(Beige), UL94V-0

NO.	MATERIAL	FINISH , REMARKS
5	Polyester	Clear(Cover tape)
4	PS	Clear(Embossed carrier tape)
3	Brass	Surface:Tin plated 1μm MIN (Under plating)Nickel plated 1μm MIN

UNITS	SCALE		COUNT	DESCRIPTION OF REVISIONS	DESIGNED	CHECKED	DATE
mm	5 : 1	1		DIS-H-00019004	SS. YAMASAKI	SZ. ONO	20230829

HIROSE ELECTRIC CO., LTD.

APPROVED	: KI. AKIYAMA	20151217	DRAWING NO.	EDC-367269-51-00
CHECKED	: TS. FUKUSHIMA	20151217	PART NO.	DF3EA-*P-2H(51)
DESIGNED	: HT. SATO	20151217	CODE NO.	CL543-
DRAWN	: MI. SAKIMURA	20151217		1 1/2

FORM HC0011-5-7

Downloaded from Arrow.com.

Sep.1.2025 Copyright 2025 HIROSE ELECTRIC CO., LTD. All Rights Reserved.
In case of consideration for using Automotive equipment / device which demand high reliability, kindly contact our sales window correspondents.

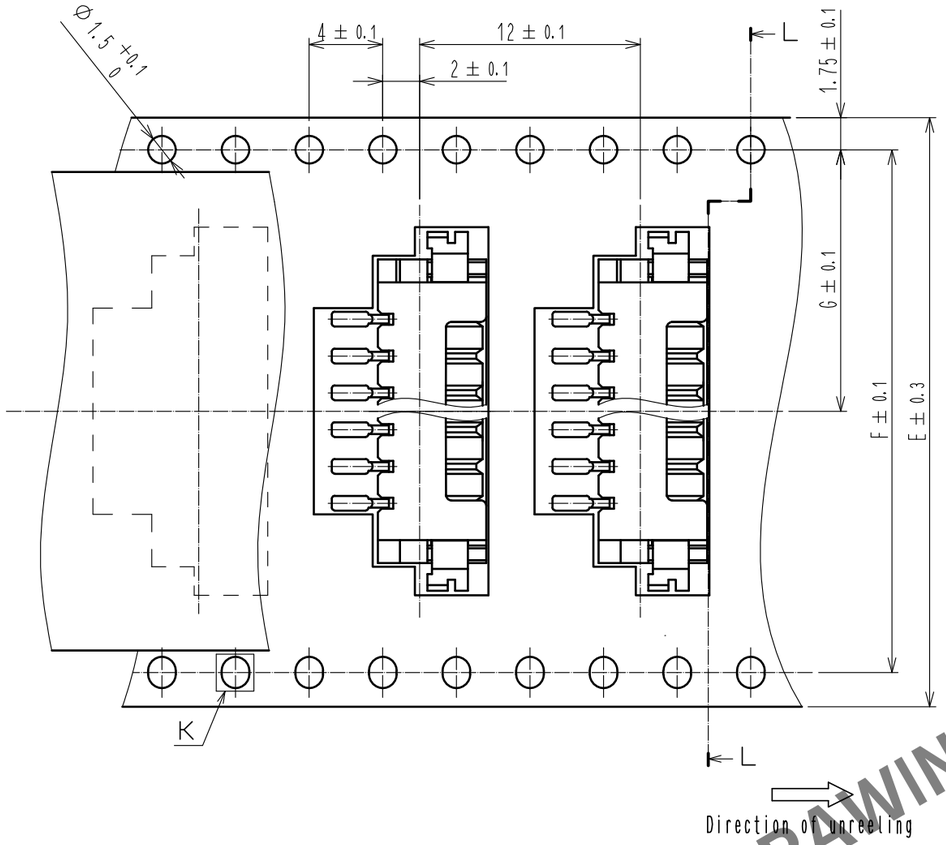

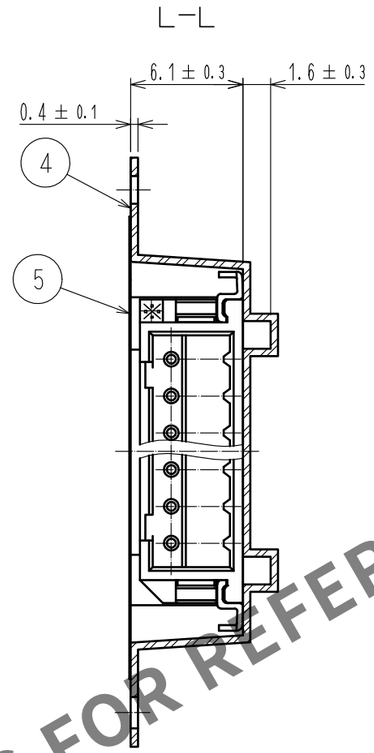

Part No.	Code No.	Number of contact	E	F	G	H
DF3EA- 2P-2H(51)	CL543-0329-0-51	2	24.0		11.5	24.4
DF3EA- 3P-2H(51)	CL543-0330-0-51	3	24.0		11.5	24.4
DF3EA- 4P-2H(51)	CL543-0331-0-51	4	24.0		11.5	24.4
DF3EA- 5P-2H(51)	CL543-0332-0-51	5	32.0	28.4	14.2	32.4
DF3EA- 6P-2H(51)	CL543-0333-0-51	6	32.0	28.4	14.2	32.4
DF3EA- 7P-2H(51)	CL543-0334-0-51	7	32.0	28.4	14.2	32.4
DF3EA- 8P-2H(51)	CL543-0335-0-51	8	44.0	40.4	20.2	44.4
DF3EA- 9P-2H(51)	CL543-0336-0-51	9	44.0	40.4	20.2	44.4
DF3EA-10P-2H(51)	CL543-0337-0-51	10	44.0	40.4	20.2	44.4
DF3EA-11P-2H(51)	CL543-0338-0-51	11	56.0	52.4	26.2	56.4
DF3EA-12P-2H(51)	CL543-0339-0-51	12	56.0	52.4	26.2	56.4
DF3EA-13P-2H(51)	CL543-0340-0-51	13	56.0	52.4	26.2	56.4
DF3EA-14P-2H(51)	CL543-0341-0-51	14	56.0	52.4	26.2	56.4
DF3EA-15P-2H(51)	CL543-0342-0-51	15	56.0	52.4	26.2	56.4

HRS DRAWING FOR REFERENCE

K(10:1)

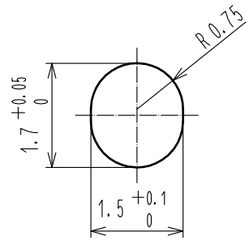

Notes
4. 1 reel 1000 connectors.
5. At the beginning of the reel, 30 boxes shall be empty.
   At The end of the reel, 20 boxes shall be empty.
6. When the tape width is 32, 44 and 56 mm, sprocket holes shall be set on both sides of reel as shown on this drawing.

Style and dimension of reel

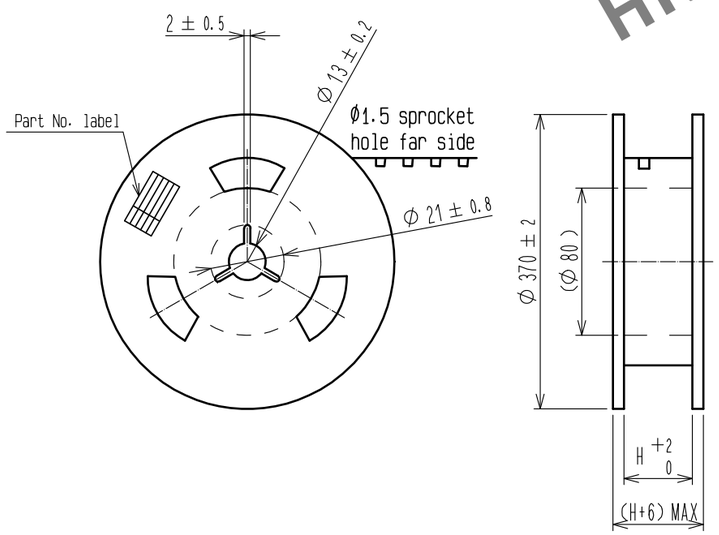

Supplier
Quantity
Part No.
Code No.
Date of manufactured

Detail of Part No. label

生産月日	年　月　日
図番	CL543-****-*-51
品名	DF3EA-*P-2H(51)
納入数量	1000ko
納入者	ヒロセ電機(株)

DRAWING NO.	EDC-367269-51-00
PART NO.	DF3EA-*P-2H(51)
CODE NO.	CL543-

1 2/2

FORM HC0011-5-8

Downloaded from Arrow.com.