Important notice on ams-OSRAM documents

As part of the acquisition of the non-optical analog/mixed-signal sensor portfolio from ams-OSRAM by Infineon, Infineon is in the process of rebranding all relevant documents.
Due to the large volume of documents, this process will be completed in phases. In the interim, we are providing access to legacy ams-OSRAM documents under the terms of a trademark license agreement.

The attached document is a legacy ams-OSRAM document and has not been rebranded to reflect the acquisition by Infineon.

Please note that:

Infineon Technologies AG is the owner and provider of the document and the products/services described therein, effective from 1 July 2026, the date of “closing”.

All terms and conditions, including but not limited to warranties, liabilities, and intellectual property rights, are now governed by Infineon's policies and agreements.

All products described in these documents retain their original qualifications and certifications. Infineon confirms that no changes will be made to the products that would affect their compliance with relevant standards, regulations, or certifications.

Contact:

Infineon Technologies AG
Am Campeon 1-15
85579 Neubiberg
Germany

© 2026 Infineon Technologies AG
All Rights Reserved.
Email: erratum@infineon.com

Downloaded from Arrow.com.

Product Document

Published by
ams OSRAM Group

Downloaded from Arrow.com.

AS5162

12-Bit Magnetic Angle Position Sensor

General Description

The AS5162 is a contactless magnetic angle position sensor for accurate angular measurement over a full turn of 360°. A sub range can be programmed to achieve the best resolution for the application. It is a system-on-chip, combining integrated Hall elements, analog front end, digital signal processing and best in class automotive protection features in a single device.

To measure the angle, only a simple two-pole magnet, rotating over the center of the chip, is required. The magnet may be placed above or below the IC.

The absolute angle measurement provides instant indication of the magnet's angular position with a resolution of 0.022° = 16384 positions per revolution. According to this resolution the adjustment of the application specific mechanical positions are possible. The angular output data is available over a 12 bit ratiometric analog output.

The AS5162 operates at a supply voltage of 5V and the supply and output pins are protected against overvoltage up to +20V. In addition the supply pins are protected against reverse polarity up to –20V.

Figure 1:
Typical Arrangement of AS5162 and Magnet

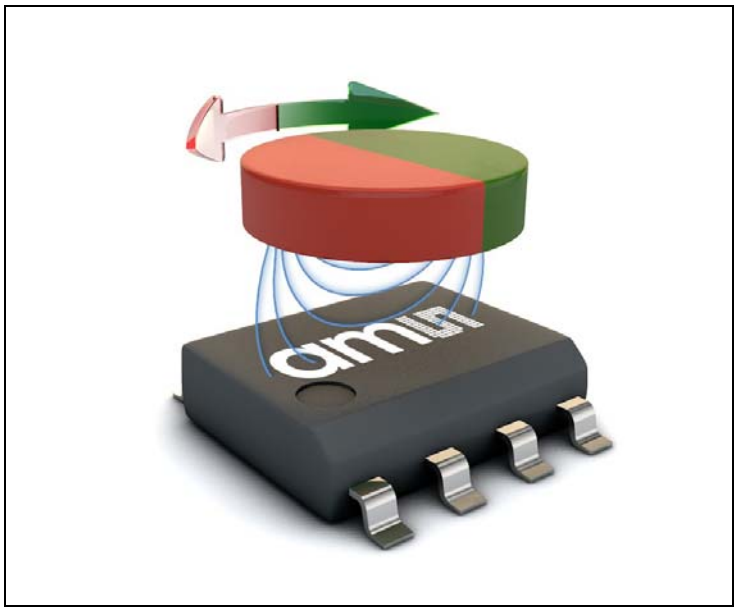

Ordering Information and Content Guide appear at end of datasheet.

Downloaded from Arrow.com.

Key Benefits & Features

The benefits and features of AS5162, 12-Bit Magnetic Angle Position Sensor are listed below:

Figure 2:
Added Value of Using AS5162

Benefits	Features
• Great flexibility on angular excursion	• 360º contactless high resolution angular position sensing
• Simple programming	• User programmable start and end point of the application region • Saw tooth mode 1-4 slopes per revolution • Clamping levels • Transition point
• Failure diagnostics	• Broken GND and VDD detection for all external load cases
• High-Resolution output signal	• Analog output ratiometric to VDD
• Ideal for applications in harsh environments due to contactless position sensing	• Wide temperature range: - 40°C to 150°C

Applications

The AS5162 is ideal for automotive applications like:

- Throttle and valve position sensing
- Gearbox position sensor
- Tumble flap
- Chassis height level
- Pedal position sensing
- Contactless potentiometers

Downloaded from Arrow.com.

Block Diagram

The functional blocks of this device are shown below:

Figure 3:
AS5162 Block Diagram

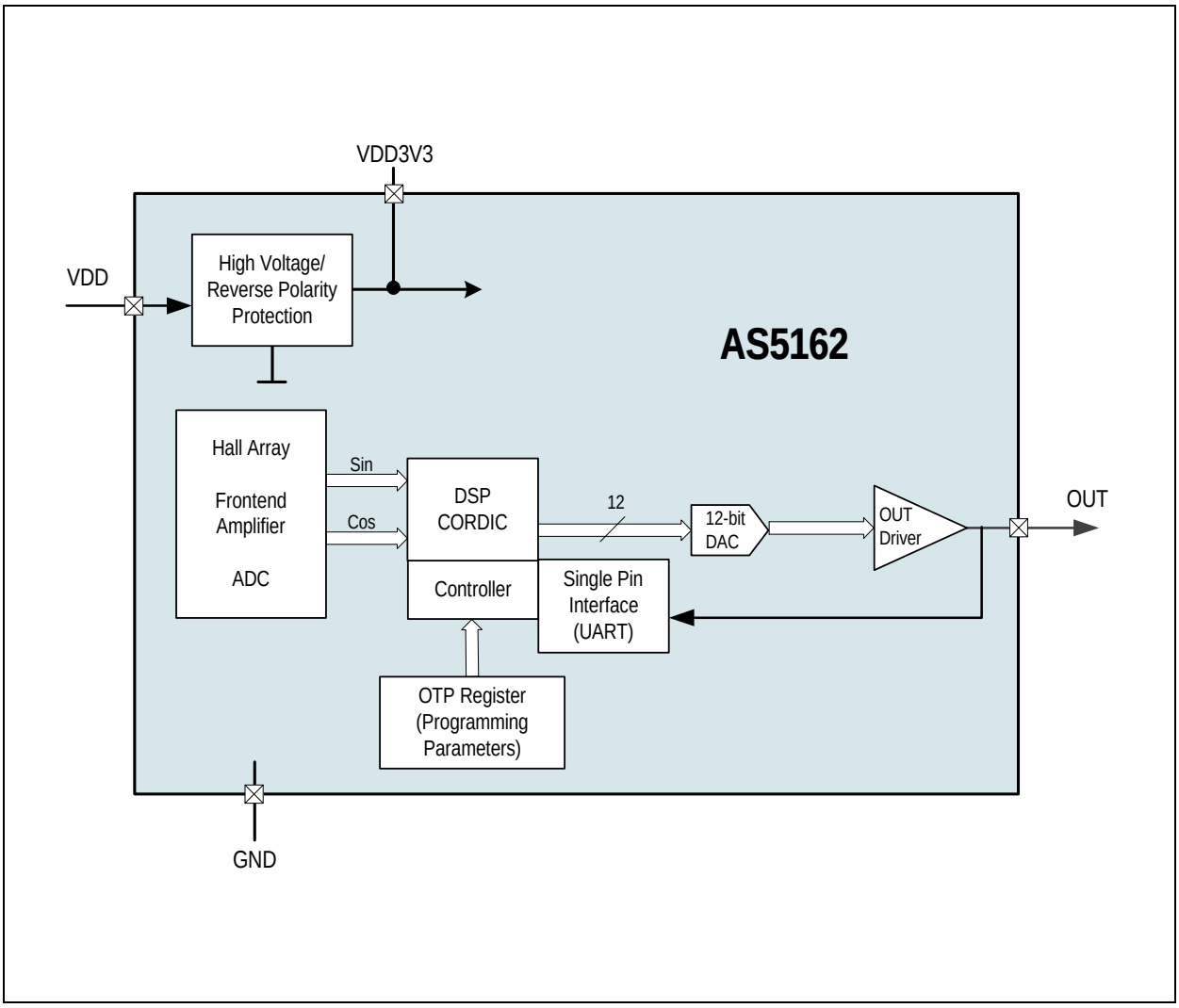

Downloaded from Arrow.com.

Pin Assignment

Figure 4:
SOIC-8 Pin Configuration

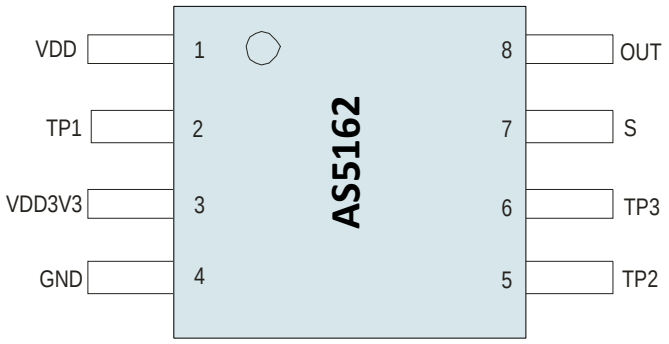

Figure 5:
SOIC-8 Pin Description

Pin Number	Pin Name	Pin Type	Description
1	VDD	Supply pin	**Positive supply pin.** This pin is over voltage protected.
2	TP1	DIO/AIO multi purpose pin	**Test pin for fabrication.** Connected to ground in the application board.
3	VDD3V3	AIO	Output of the internal voltage regulator
4	GND	Supply pin	**Ground pin.** Connected to ground in the application.
5	TP2	DIO/AIO multi purpose pin	**Test pin for fabrication.** Connected to ground in the application board.
6	TP3	DIO/AIO multi purpose pin	**Test pin for fabrication.** Open in the application.
7	S	AIO	**Test pin for fabrication.** Connected to OUT in the application board.
8	OUT	DIO/AIO multi purpose pin	**Output pin analog output.** Over this pin the programming is possible.

Downloaded from Arrow.com.

Absolute Maximum Ratings

Stresses beyond those listed in Absolute Maximum Ratings may cause permanent damage to the device. These are stress ratings only, and functional operation of the device at these or any other conditions beyond those indicated in Electrical Characteristics is not implied. Exposure to absolute maximum rating conditions for extended periods may affect device reliability.

Figure 6:
Absolute Maximum Ratings

Symbol	Parameter	Min	Max	Units	Comments
Electrical Parameters					
V_{DD}	DC supply voltage at pin VDD Overvoltage	-20	20	V	No operation
V_{OUT}	Output voltage OUT	-0.3	20	V	Permanent
V_{diff}	Voltage difference at pin VDD and OUT	-20	20	V	
V_{DD3V3}	DC supply voltage at pin V_{DD3V3}	-0.3	5	V	
I_{scr}	Input current (latchup immunity)	-100	100	mA	Norm: AEC-Q100-004
Electrostatic Discharge					
ESD	Electrostatic discharge	±2		kV	Norm: AEC-Q100-002
Temperature Ranges and Storage Conditions					
T_{strg}	Storage temperature	-55	150	°C	Min -67°F; Max 302°F
T_{Body}	Body temperature		260	°C	The reflow peak soldering temperature (body temperature) specified is in accordance with IPC/JEDEC J-STD-020 "Moisture/Reflow Sensitivity Classification for Non-Hermetic Solid State Surface Mount Devices". The lead finish for Pb-free leaded packages is matte tin (100% Sn).
RH_{NC}	Relative humidity (non-condensing)	5	85	%	
MSL	Moisture Sensitivity Level	3			Represents a maximum floor life time of 168h

Downloaded from Arrow.com.

Electrical Characteristics

Operating Conditions

In this specification, all the defined tolerances for external components need to be assured over the whole operation conditions range and also over lifetime.

Figure 7:
Operating Conditions

Symbol	Parameter	Conditions	Min	Typ	Max	Units
T_{AMB}	Ambient temperature		-40		150	°C
I_{supp}	Supply current				12	mA
V_{DD}	Supply voltage at pin VDD		4.5	5.0	5.5	V

Magnetic Input Specification

T_{AMB} = -40°C to 150°C, V_{DD} = 4.5V to 5.5V (5V operation), unless otherwise noted.

Two-Pole Cylindrical Diametrically Magnetized Source

Figure 8:
Magnetic Input Specification

Symbol	Parameter	Conditions	Min	Typ	Max	Units
B_{pk}	Magnetic input field amplitude	Required vertical component of the magnetic field strength on the die's surface, measured along a concentric circle with a radius of 1.25 mm	30		70	mT
B_{pkext}	Magnetic input field amplitude (extended) default setting	Required vertical component of the magnetic field strength on the die's surface, measured along a concentric circle with a radius of 1.25 mm. Increased sensor output noise.	10		90	mT
B_{off}	Magnetic offset	Constant magnetic stray field			± 5	mT
	Field non-linearity	Including offset gradient			5	%
D_{isp}	Displacement radius	Offset between defined device center and magnet axis. Dependent on the selected magnet. Including Eccentricity.		1		mm

Downloaded from Arrow.com.

Electrical System Specifications

T_{AMB} = -40°C to 150°C, V_{DD} = 4.5V to 5.5V (5V operation), Magnetic Input Specification, unless otherwise noted.

Figure 9:
Electrical System Specifications

Symbol	Parameter	Conditions	Min	Typ	Max	Units
RES	Resolution Analog Output	Range > 90° 1LSB=1.221mV typ			12	bit
INL_{opt}	Integral non-linearity (optimum)	Best aligned reference magnet at 25°C over full turn 360°.			0.5	deg
INL_{temp}	Integral non-linearity (optimum)	Best aligned reference magnet over temperature -40° to 150° over full turn 360°.			0.9	deg
INL	Integral non-linearity	Best aligned reference magnet over temperature -40° to 150° over full turn 360° and displacement			1.4	deg
DNL	Differential non-linearity	Monolitic		0.05		deg
ON	Output noise (360° segment)	1 LSB after filter peak/peak rms value		0.2		%/VDD
t_{PwrUp}	Power-up time 0-5V	See Figure 10			10	ms
t_{delay}	System propagation delay absolute output: delay of ADC, DSP and absolute interface	10kOhm, 100 µF RC filter			300	µs

Figure 10:
Power-Up Timing Diagram

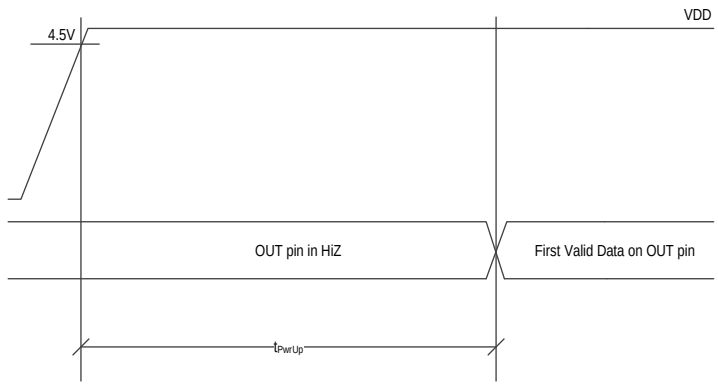

Downloaded from Arrow.com.

Timing Characteristics

Figure 11:
Timing Conditions

Symbol	Parameter	Conditions	Min	Typ	Max	Units
T_{DETWD}	WachDog error detection time				12	ms

Power Management - Supply Monitor

Figure 12:
Power Management - Supply Monitor Conditions

Symbol	Parameter	Conditions	Min	Typ	Max	Units
VDD_{UVTH}	VDD undervoltage upper threshold		3.5	4.0	4.5	V
VDD_{UVTL}	VDD undervoltage lower threshold		3.0	3.5	4.0	V
VDD_{UVHYS}	VDD undervoltage hysteresis		300	500	900	mV
VDD_{UVDET}	VDD undervoltage detection time		10	50	250	µs
VDD_{UVREC}	VDD undervoltage recovery time		10	50	250	µs
VDD_{OVTH}	VDD overvoltage upper threshold		6.0	6.5	7.0	V
VDD_{OVTL}	VDD overvoltage lower threshold		5.5	6	6.5	V
VDD_{OVHYS}	VDD overvoltage hysteresis		300	500	900	mV
ANA_{TOVDET}	VDD overvoltage detection time (analog path)		10	50	250	µs
ANA_{TOVREC}	VDD overvoltage recovery time (analog path)		10	50	250	µs

Downloaded from Arrow.com.

Detailed Description

The AS5162 is manufactured in a CMOS process and uses a spinning current Hall technology for sensing the magnetic field distribution across the surface of the chip.

The integrated Hall elements are placed around the center of the device and deliver a voltage representation of the magnetic field at the surface of the IC.

Through Sigma-Delta Analog / Digital Conversion and Digital Signal-Processing (DSP) algorithms, the AS5162 provides accurate high-resolution absolute angular position information. For this purpose a Coordinate Rotation Digital Computer (CORDIC) calculates the angle and the magnitude of the Hall array signals.

The DSP is also used to provide digital information at the outputs that indicate movements of the used magnet towards or away from the device's surface.

A small low cost diametrically magnetized (two-pole) standard magnet provides the angular position information.

The AS5162 senses the orientation of the magnetic field and calculates a 14-bit binary code. This code is mapped to a programmable output characteristic in analog voltage format. This signal is available at the pin (**OUT**).

The application angular region can be programmed in a user friendly way. The start angle position **T1** and the end point **T2** can be set and programmed according the mechanical range of the application with a resolution of 14 bits. In addition the **T1Y** and **T2Y** parameter can be set and programmed according the application. The transition point 0 to 360 degree can be shifted using the break point parameter **BP**. The voltage for clamping level low **CLL** and clamping level high **CLH** can be programmed with a resolution of 9 bits. Both levels are individually adjustable.

The output parameters can be programmed in an OTP register. No additional voltage is required to program the AS5162. The setting may be overwritten at any time and will be reset to default when power is cycled. To make the setting permanent, the OTP register must be programmed by using a lock bit the content could be frozen for ever.

The AS5162 is tolerant to magnet misalignment and unwanted external magnetic fields due to differential measurement technique and Hall sensor conditioning circuitry.

Downloaded from Arrow.com.

Operation

VDD Voltage Monitor

VDD Over Voltage Management. If the supply voltage at pin **VDD** exceeds the over-voltage upper threshold for longer than the detection time the output is turned off. When the over voltage event has passed and the voltage applied to pin **VDD** falls below the over-voltage lower threshold for longer than the recovery time the device enters the normal mode and the output is enabled.

VDD Under Voltage Management. When the voltage applied to the **VDD** pin falls below the under-voltage lower threshold for longer than the detection time the output is turned off. When the voltage applied to the **VDD** pin exceeds the under-voltage upper threshold for longer than the detection time the device enters the normal mode and the output is enabled.

Analog Output

By default (after programmed **CUST_LOCK** OTP bit) the analog output mode is selected. The pin **OUT** provides an analog voltage that is proportional to the angle of the rotating magnet and ratiometric to the supply voltage **VDD**. It can source or sink currents up in normal operation. A short circuit protection is in place and will switch the output driver in high Z in case of an overload event. Due to an intelligent approach a permanent short circuit will not damage the device. This is also feasible in a high voltage condition up to 20 V and at the highest specified ambient temperature.

After the digital signal processing (DSP) a 12-bit Digital-to-Analog converter and output stage provides the output signal.

The DSP maps the application range to the output characteristic. An inversion of the slope is also programmable to allow inversion of the rotation direction.

The reference voltage for the Digital-to-Analog converter (DAC) is taken from **VDD**. In this mode, the output voltage is ratiometric to the supply voltage.

An on-chip diagnostic feature handles the error state at the output. Depending on the failure the output is in HiZ condition or is driven in the failure band (see Figure 21).

Downloaded from Arrow.com.

Programming Parameters

The analog output characteristic is programmable by OTP. Depending on the application, the analog output can be adjusted. The user can program the following application specific parameters.

Figure 13:
Programming Parameters

Parameter	Description
T1	Mechanical angle start point
T2	Mechanical angle end point
T1Y	Voltage level at the T1 position
T2Y	Voltage level at the T2 position
CLL	Clamping Level Low
CLH	Clamping Level High
BP	Break point (transition point 0 to 360°)

These parameters are input parameters. Using the available programming software and programmer these parameters are converted and finally written into the AS5162 128 bit OTP memory.

Downloaded from Arrow.com.

Application Specific Angular Range Programming

The application range can be selected by programming **T1** with a related **T1Y** and **T2** with a related **T2Y** into the AS5162. The clamping levels **CLL** and **CLH** can be programmed independent from the **T1** and **T2** position and both levels can be separately adjusted.

Figure 14:
Programming of an Individual Application Range

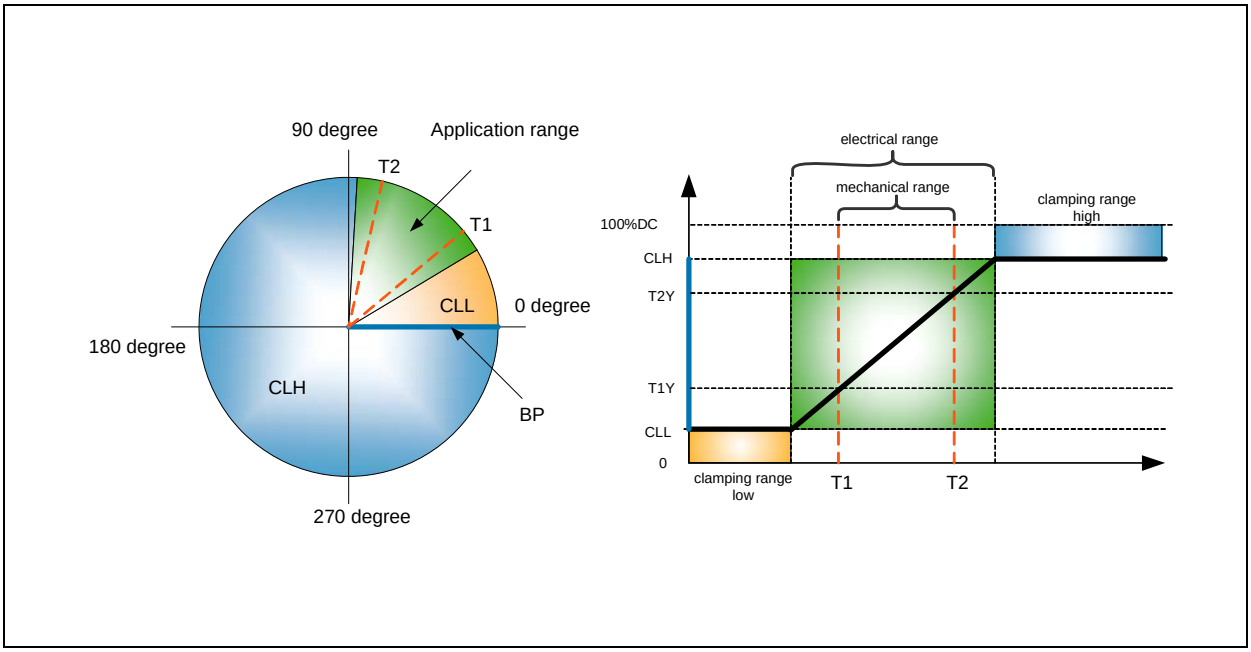

Figure 14 shows a simple example of the selection of the range. The mechanical starting point **T1** and the mechanical end point **T2** are defining the mechanical range. A sub range of the internal CORDIC output range is used and mapped to the needed output characteristic. The analog output signal has 12 bit, hence the level **T1Y** and **T2Y** can be adjusted with this resolution. As a result of this level and the calculated slope the clamping region low is defined. The break point **BP** defines the transition between **CLL** and **CLH**. In this example the **BP** is set to 0 degree. The **BP** is also the end point of the clamping level high **CLH**. This range is defined by the level **CLH** and the calculated slope. Both clamping levels can be set independently form each other.

Downloaded from Arrow.com.

Application Specific Programming of the Break Point

The break point **BP** can be programmed as well with 14 bits. This is important when the default transition point is inside the application range. In such a case the default transition point must be shifted out of the application range. The parameter **BP** defines the new position.

Figure 15:
Individual Programming of the Break Point BP

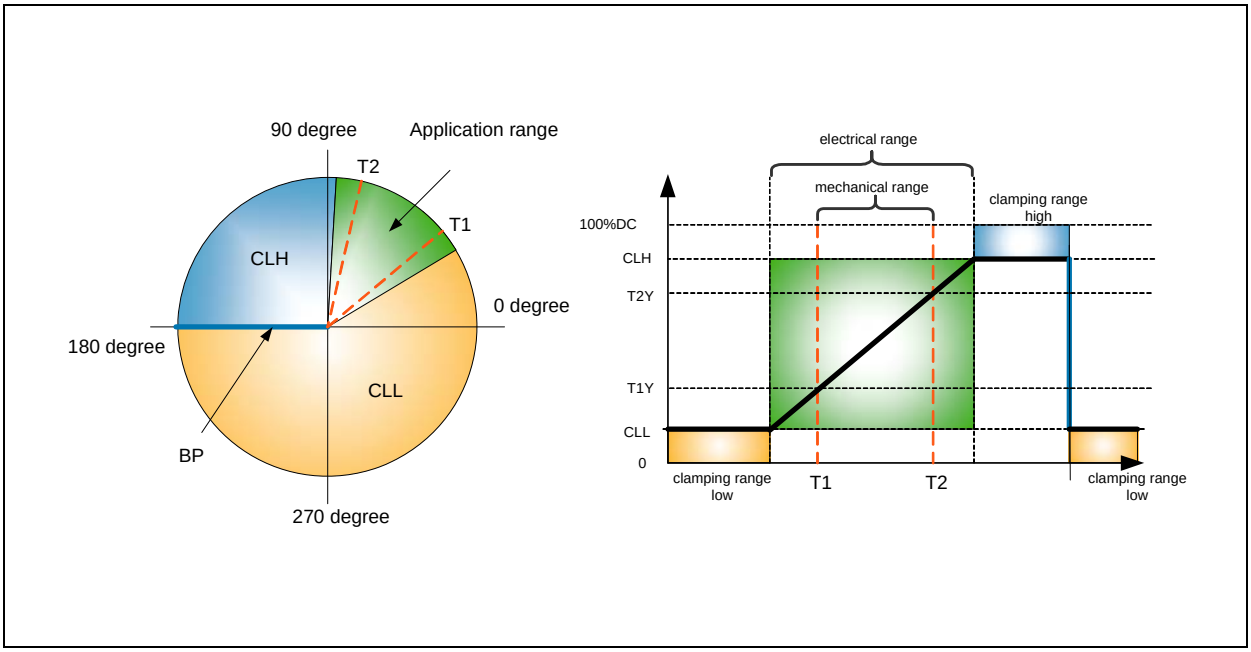

Full Scale Mode

Figure 16:
Full Scale Mode

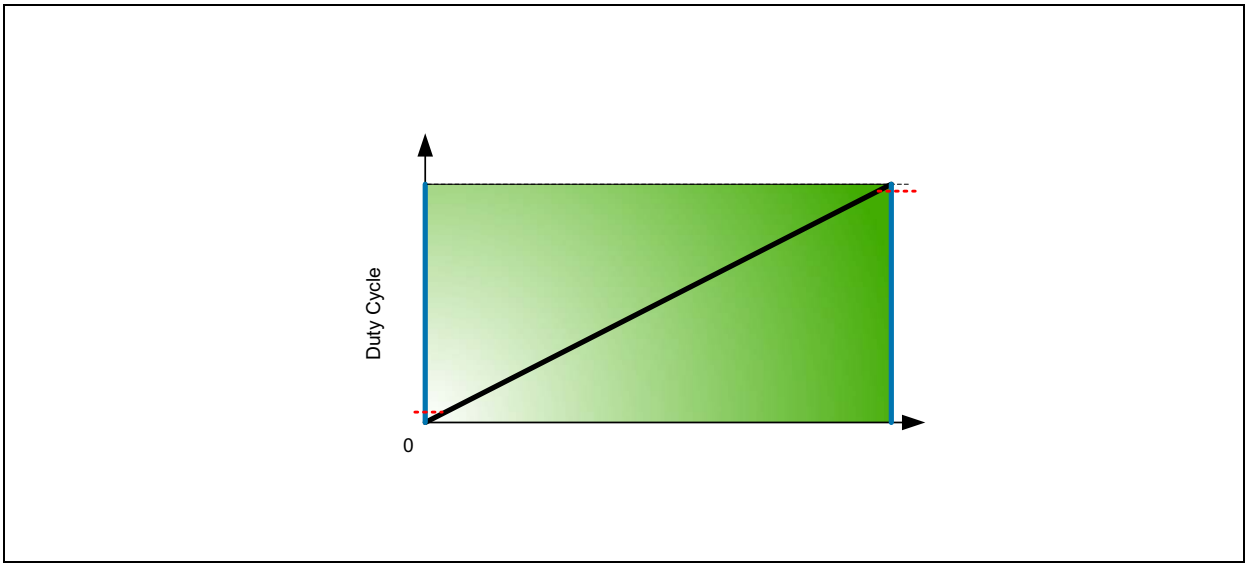

Downloaded from Arrow.com.

For simplification, Figure 16 describes a linear output voltage from rail to rail (0V to VDD) over the complete rotation range. In practice, this is not feasible due to saturation effects of the output stage transistors. The actual curve will be rounded towards the supply rails (as indicated Figure 16).

Multiple Slope Output

The AS5162 can be programmed to multiple slopes. Where one programmed reference slope characteristic is copied to multiple slopes. Two, three and four slopes are selectable by the user OTP bits QUADEN (1:0). In addition to the steepness of the slope the clamping levels can be programmed as well.

Figure 17:
Two Slope Mode

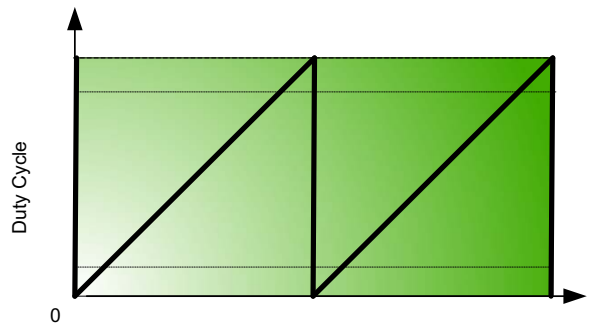

Figure 18:
Four Slope Mode

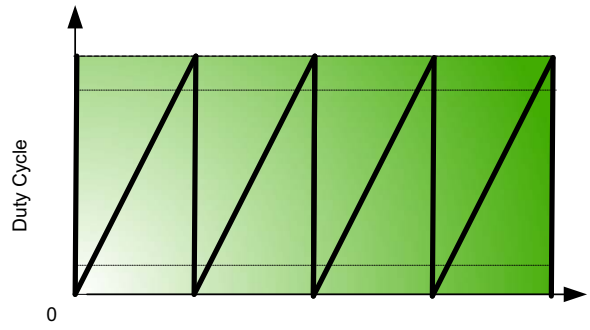

Downloaded from Arrow.com.

Resolution of Parameters

The programming parameters have a wide resolution of up to 14 bits.

Figure 19:
Resolution of the Programming Parameters

Symbol	Parameter	Resolution	Note
T1	Mechanical angle start point	14 bits	
T2	Mechanical angle stop point	14 bits	
T1Y	Mechanical start voltage level	12 bits	
T2Y	Mechanical stop voltage level	12 bits	
CLL	Clamping level low	9 bits	
CLH	Clamping level high	9 bits	
BP	Break point	14 bits	

Figure 20:
Overview of the Angular Output Voltage

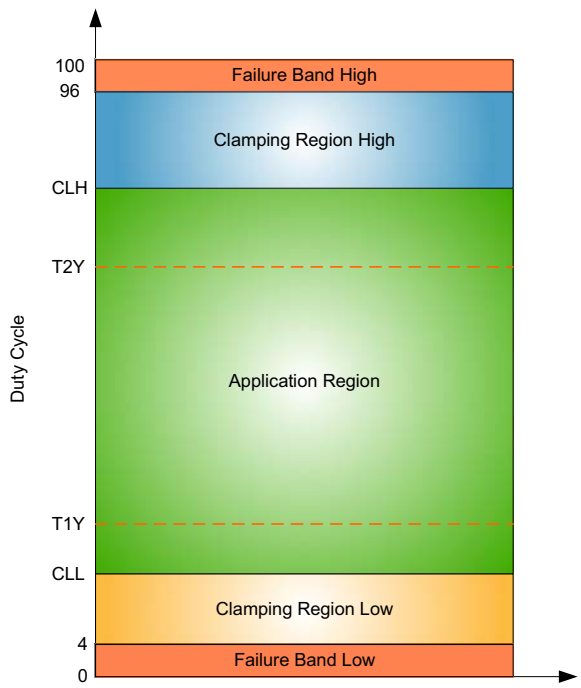

Downloaded from Arrow.com.

Figure 20 gives an overview of the different ranges. The failure bands are used to indicate a wrong operation of the AS5162. This can be caused due to a broken supply line. By using the specified load resistors, the output level will remain in these bands during a fail. It is recommended to set the clamping level **CLL** above the lower failure band and the clamping level **CLH** below the higher failure band.

Analog Output Diagnostic Mode

Due to the low pin count in the application a wrong operation must be indicated by the output pin **OUT**. This could be realized using the failure bands. The failure band is defined with a fixed level. The failure band low is specified from 0 to 4% of the supply range over the total operation range. The failure band high is defined always from 96 to 100%. Several failures can happen during operation. The output signal remains in these bands over the specified operating and load conditions. All different failures can be grouped into the internal alarms (failures) and the application related failures.

$C_{LOAD} \leq 33$ nF, R_{PU}= 4kΩ to 10kΩ

R_{PD}= 4kΩ to 10kΩ load pull-up

Figure 21:
Different Failure Cases of AS5162

Type	Failure Mode	Symbol	Failure Band	Note
Internal alarms (failures)	Out of magnetic range (too less or too high magnetic input)	MAGRng	High/Low	Programmable by OTP bit **DIAG_HIGH**
	CORDIC overflow	COF	High/Low	Programmable by OTP bit **DIAG_HIGH**
	Offset compensation finished	OCF	High/Low	Programmable by OTP bit **DIAG_HIGH**
	Watchdog fail	WDF	High/Low	Programmable by OTP bit **DIAG_HIGH**
	Oscillator fail	OF	High/Low	Programmable by OTP bit **DIAG_HIGH**
Application related failures	Overvoltage condition	OV	High/Low	Dependant on the load resistor Pull up → failure band high Pull down → failure band low
	Broken VDD	BVDD		
	Broken VSS	BVSS		
	Short circuit output	SCO	High/Low	Switch off → short circuit dependent

Downloaded from Arrow.com.

For efficient use of diagnostics, it is recommended to program to clamping levels **CLL** and **CLH**.

Analog Output Driver Parameters

The output stage is configured in a push-pull output. Therefore it is possible to sink and source currents.

$C_{LOAD} \leq 33nF$, R_{PU}= 4kΩ to 10kΩ;
R_{PD}= 4kΩ to 10kΩ load pull-up

Figure 22:
General Parameters for the Output Driver

Symbol	Parameter	Min	Typ	Max	Unit	Note
IOUTSCL	Short circuit output current (low side driver)	5	10	20	mA	V_{OUT}=20V
IOUTSCH	Short circuit output current (high side driver)	-20	-10	-5	mA	V_{OUT}=0V
TSCDET	Short circuit detection time	20		600	µs	output stage turned off
TSCREC	Short circuit recovery time	2		20	ms	output stage turned on
ILEAKOUT	Output Leakage current	-20		20	µA	V_{OUT}=VDD=5V
BGNDPU	Output voltage broken GND with pull-up	96		100	%VDD	
BGNDPD	Output voltage broken GND with pull-down	0		4	%VDD	
BVDDPU	Output voltage broken VDD with pull-up	96		100	%VDD	
BVDDPD	Output voltage broken VDD with pull-down	0		4	%VDD	
OUTRATIO	Output ratiometric error	-0.5		0.5	%VDD	
OUTDNL	Output DNL			10[(1)]	LSB	Between 4% and 96% of VDD
OUTINL	Output INL	-10[(2)]		10[(2)]	LSB	Between 4% and 96% of VDD

Note(s) and/or Footnote(s):

1. This parameter will be finally defined after temperature characterisation.
2. Design target for this value is reduced.

Hysteresis Function

AS5162 device includes a hysteresis function to avoid sudden jumps from CLH to CLL and vice versa caused by noise in the full turn configuration. The hysteresis amplitude can be selected via the OTP bits **HYSTSEL<1:0>**.

Downloaded from Arrow.com.

Application Information

Recommended Application Schematic

Figure 23 and Figure 24 show the recommended schematic in the application. All components marked with (*) are optional and can be used to further increase the EMC.

Figure 23:
Recommended Schematic of Pull-Down Configuration

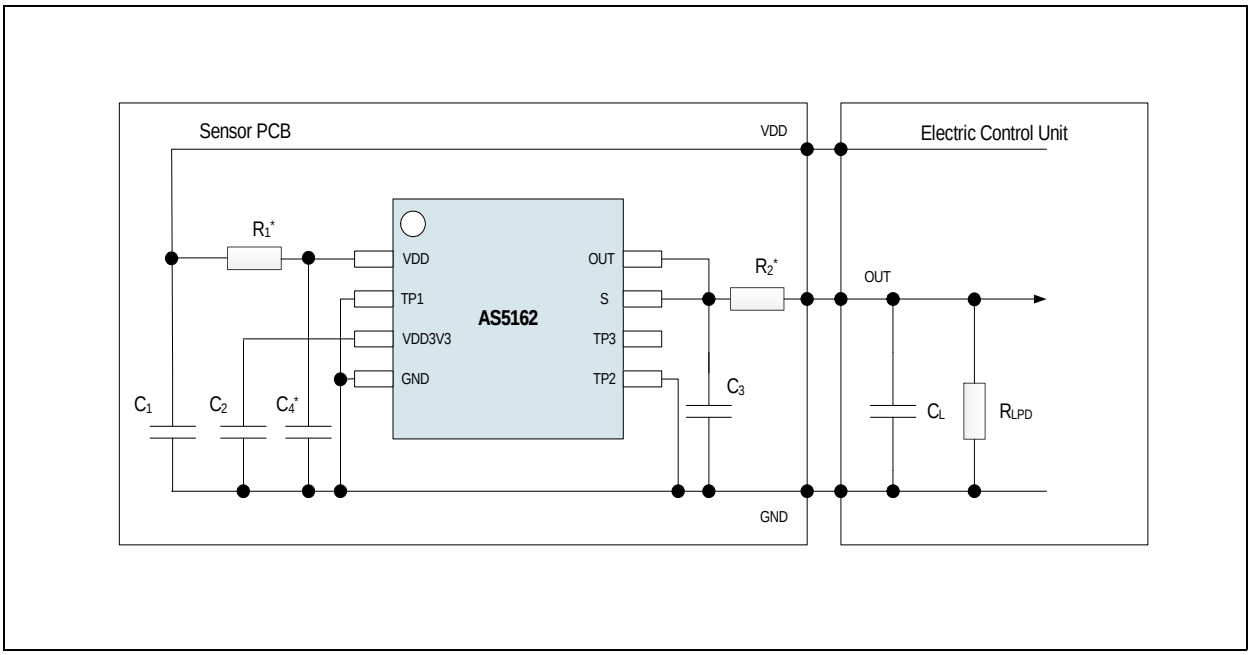

Downloaded from Arrow.com.

Figure 24:
Recommended Schematic of Pull-Up Configuration

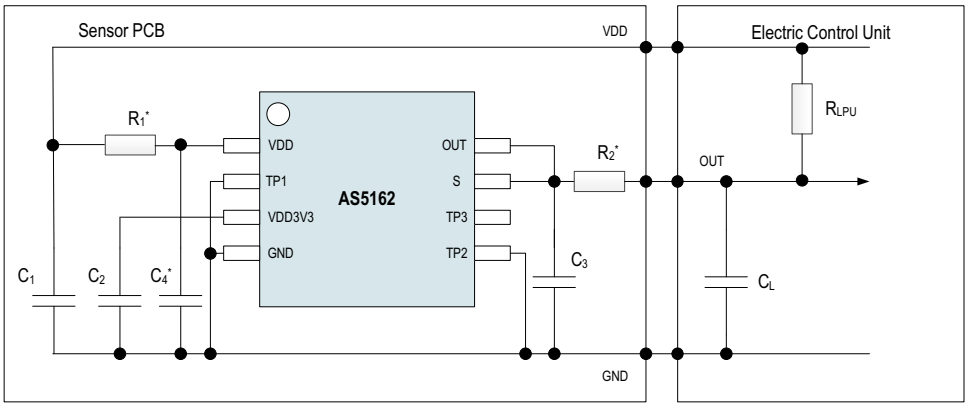

Figure 25:
External Components

Symbol	Parameter	Min	Typ	Max	Unit	Note
C_1	VDD buffer capacitor	0.8	1	1.2	µF	Low ESR 0.3 Ω
C_2	VDD3V3 regulator capacitor	0.8	1	1.2	µF	Low ESR 0.3 Ω
C_3	OUT load capacitor (sensor PCB)	0		4.7	nF	
C_4^*	VDD capacitor (optional)		4.7		nF	Do not increase due to programming over output
R_1^*	VDD serial resistor (optional)		10		Ω	
C_L	OUT load capacitor (ECU)	0		33	nF	
R_2^*	OUT serial resistor (optional)		50		Ω	
R_{LPU}	OUT pull-up resistance	4		10	kΩ	
R_{LPD}	OUT pull-down resistance	4		10	kΩ	

Downloaded from Arrow.com.

Programming the AS5162

The AS5162 programming is a one-time-programming (OTP) method, based on polysilicon fuses. The advantage of this method is that no additional programming voltage is needed. The internal LDO provides the current for programming.

The OTP consists of 128 bits; several bits are available for user programming. In addition factory settings are stored in the OTP memory. Both regions are independently lockable by build in lock bits.

A single OTP cell can be programmed only once. Per default, the cell is “0”; a programmed cell will contain a “1”. While it is not possible to reset a programmed bit from “1” to “0”, multiple OTP writes are possible, as long as only unprogrammed “0”-bits are programmed to “1”.

Independent of the OTP programming, it is possible to overwrite the OTP register temporarily with an OTP write command. This is possible only if the user lock bit is not programmed.

Due to the programming over the output pin the device will initially start in the communication mode. In this mode the digital angle value can be read with a specific protocol format. It is a bidirectional communication possible. Parameters can be written into the device. A programming of the device is triggered by a specific command. With another command (pass2func) the device can be switched into operation mode. In case of a programmed user lock bit the AS5162 automatically starts up in the functional operation mode. No communication of the specific protocol is possible after this.

A standard half duplex UART protocol is used to exchange data with the device in the communication mode.

UART Interface for Programming

The AS5162 uses a standard UART interface with an address byte and two data bytes. The read or write mode is selected with bit R/Wn in the first byte. The timing (baudrate) is selected by the AS5162 over a synchronization frame. The baud rate register can be read and overwritten (optional). Every start bit is used for synchronization.

A time out function detects not complete commands and resets the AS5162 UART after the timeout period.

Downloaded from Arrow.com.

Frame Organization

Each frame is composed by 24 bits. The first byte of the frame specifies the read/write operation with the register address. 16 data bits contains the communication data. There will be no operation in case of the usage of a not specified CMD. The UART programming interface block of the AS5162 can operate in slave communication or master communication mode. In the slave communication mode the AS5162 receives the data. The programming tool is the driver of the single communication line. In case of the master communication mode the AS5162 transmits data in the frame format. The single communication line can be pulled down by the AS5162.

The UART frame consists of 1 start bit (low level), 8 data bit, 1 even-parity bit and 1 stop bit (high level). Data are transferred from LSB to MSB.

Figure 26:
General UART Frame

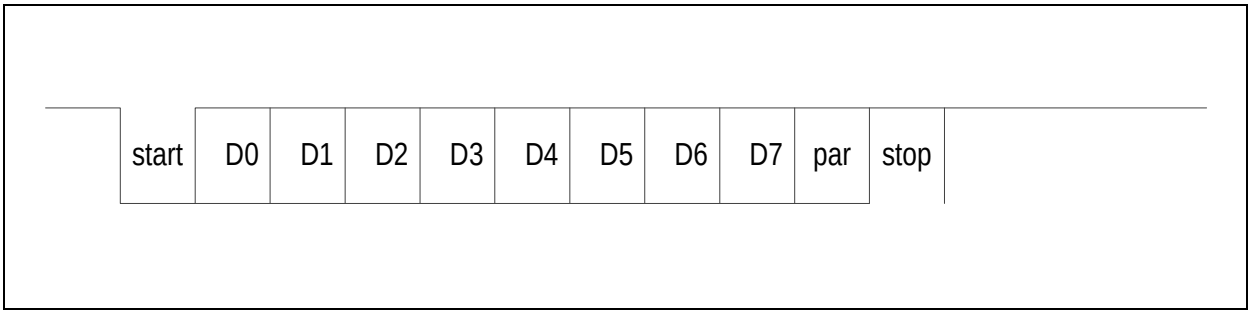

Figure 27:
Bit Timing

Symbol	Parameter	Min	Typ	Max	Unit	Note
START	Start bit		1		TBIT	
Dx	Data bit		1		TBIT	
PAR	Parity bit		1		TBIT	
STOP	Stop bit	1			TBIT	
TSW	Slave/Master Switch Time		7		TBIT	

Each communication starts with the reception of a request from the external controller. The request consists of two frames: one synchronization frame and the command frame.

Downloaded from Arrow.com.

The synchronization frame contains the data 0x55 and allows the UART to measure the external controller baud rate.

Figure 28:
Synchronization Frame

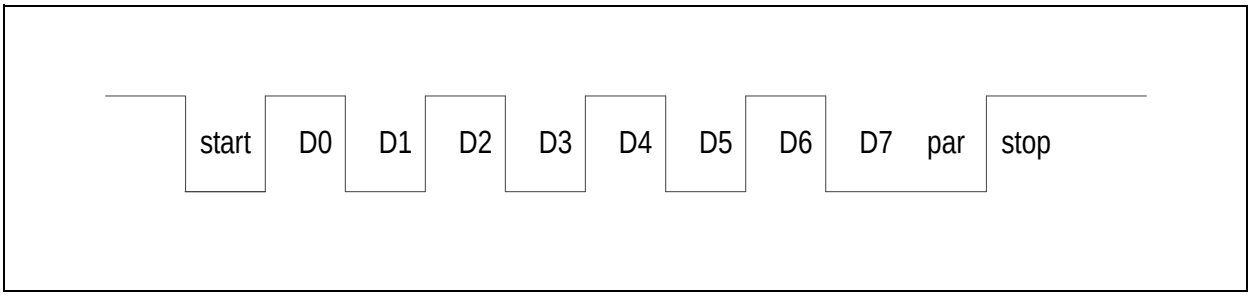

The second frame contains the command Read/ Write (1 bit) and the address (7 bits).

Figure 29:
Address and Command Frame

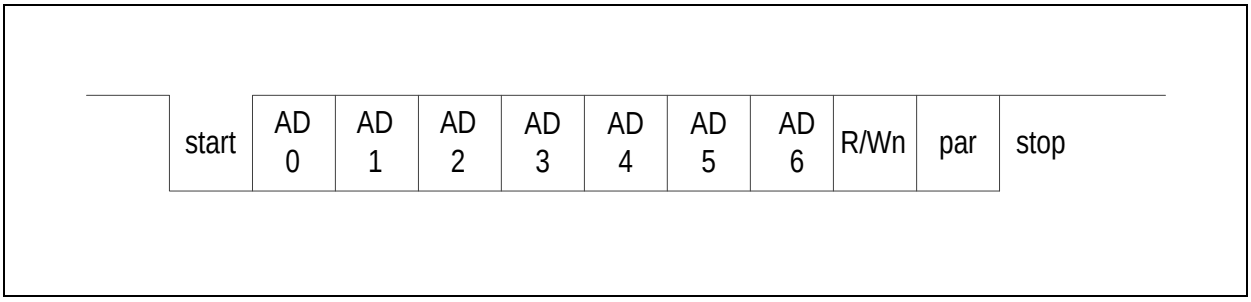

Only two commands are possible. In case of read command the idle phase between the command and the answer is the time TSW. In case of parity error command is not executed.

Figure 30:
Possible Commands

Possible Interface Commands	Description	AS5X63 Communication Mode	Command CMD
WRITE	Write data to the OTP memory or Registers	SLAVE	0
READ	Read data to the OTP memory or Registers	SLAVE & MASTER	1

Note(s) and/or Footnote(s):

1. In case of Write command the request is followed by the frames containing the data to write.
2. In case of Read command the communication direction will change and the AS5162 will answer with the frames containing the requested data.

Downloaded from Arrow.com.

WRITE (Command Description)

Figure 31:
Full Write Command

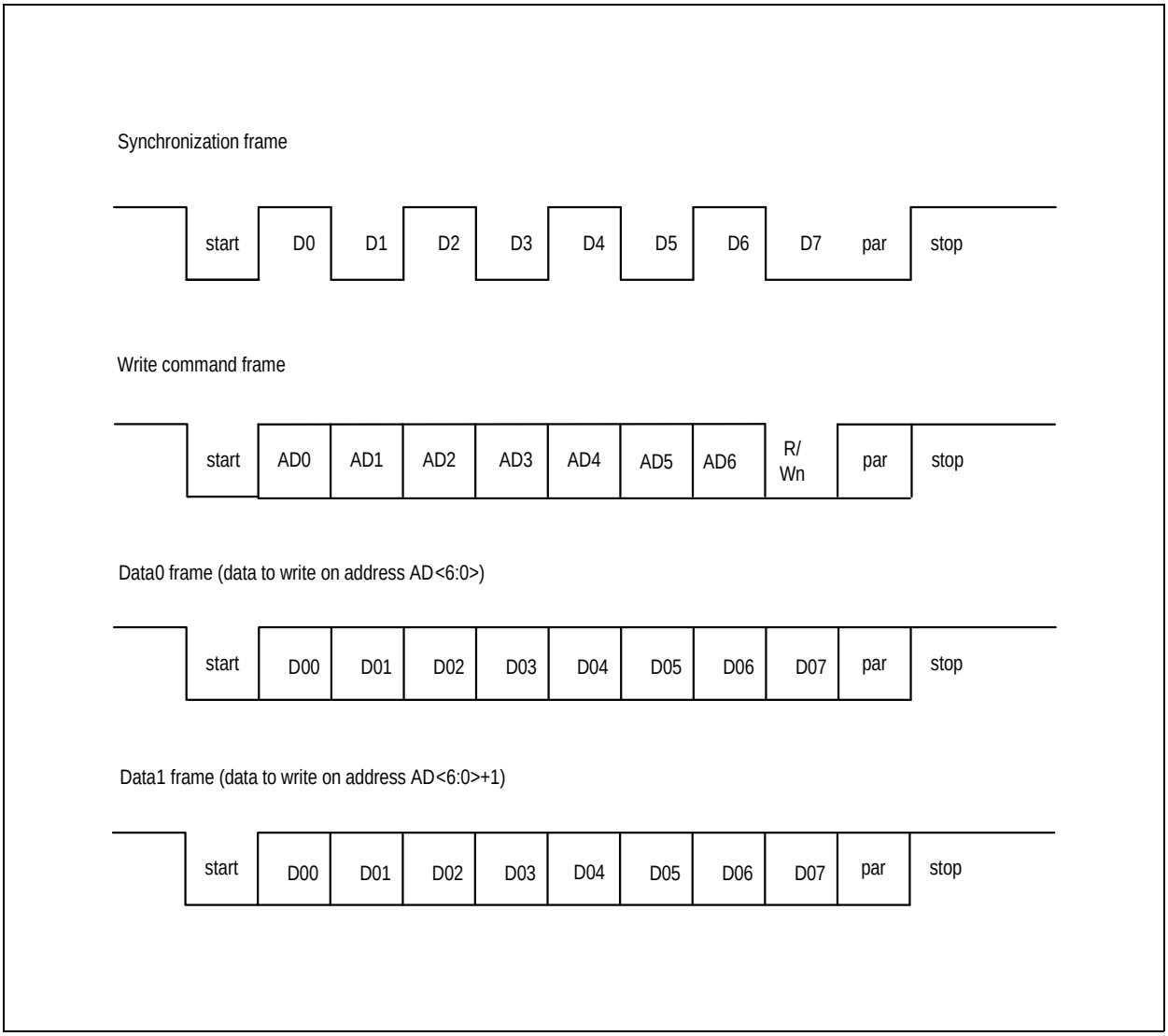

- Writing the AS5162 KEY in the fuse register (address 0x41) triggers the transfer of the data from the OTP RAM into the Poly Fuse cell.
- Writing the AS5162 KEY in the Pass2Func Register (address 0x60) forces the device into normal mode.

Downloaded from Arrow.com.

READ (Command Description)

Figure 32:
Full Read Command

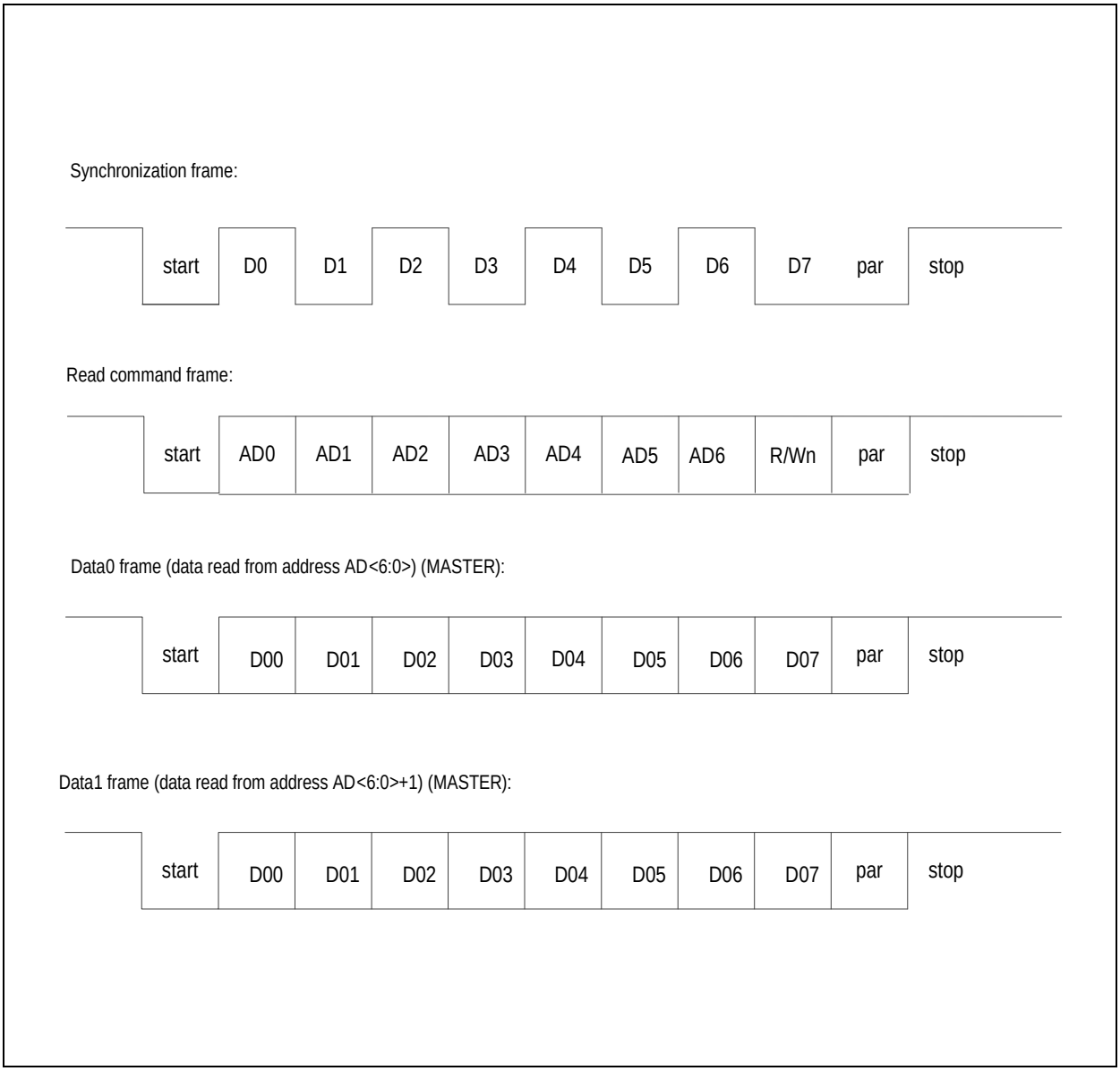

Baud-Rate Automatic Detection

The UART includes a built-in baud-rate monitor that uses the synchronization frame to detect the external controller baud-rate. This baud-rate is used after the synchronization byte to decode the following frame and to transmit the answer and it is stored in the BAUDREG register.

Downloaded from Arrow.com.

Baud-Rate Manual Setting (Optional)

The BAUDREG register can be read and over-written for a possible manual setting of the baud-rate: in case the register is overwritten with a value different from 0, this value will be used for the following UART communications and the synchronization frame must be removed from the request.

Figure 33:
Manual Baud-Rate Setting

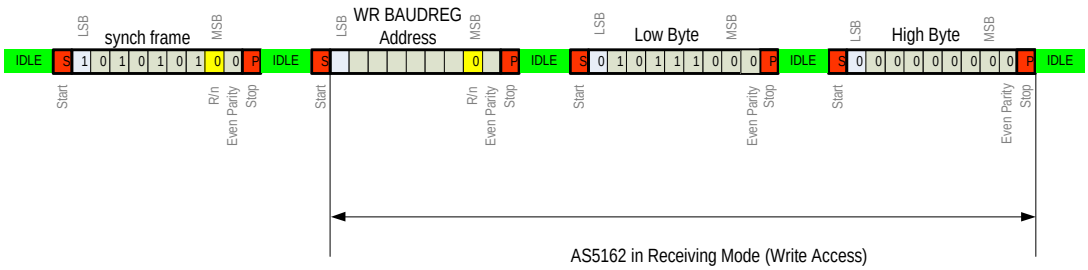

Figure 34:
Simple Read and Write

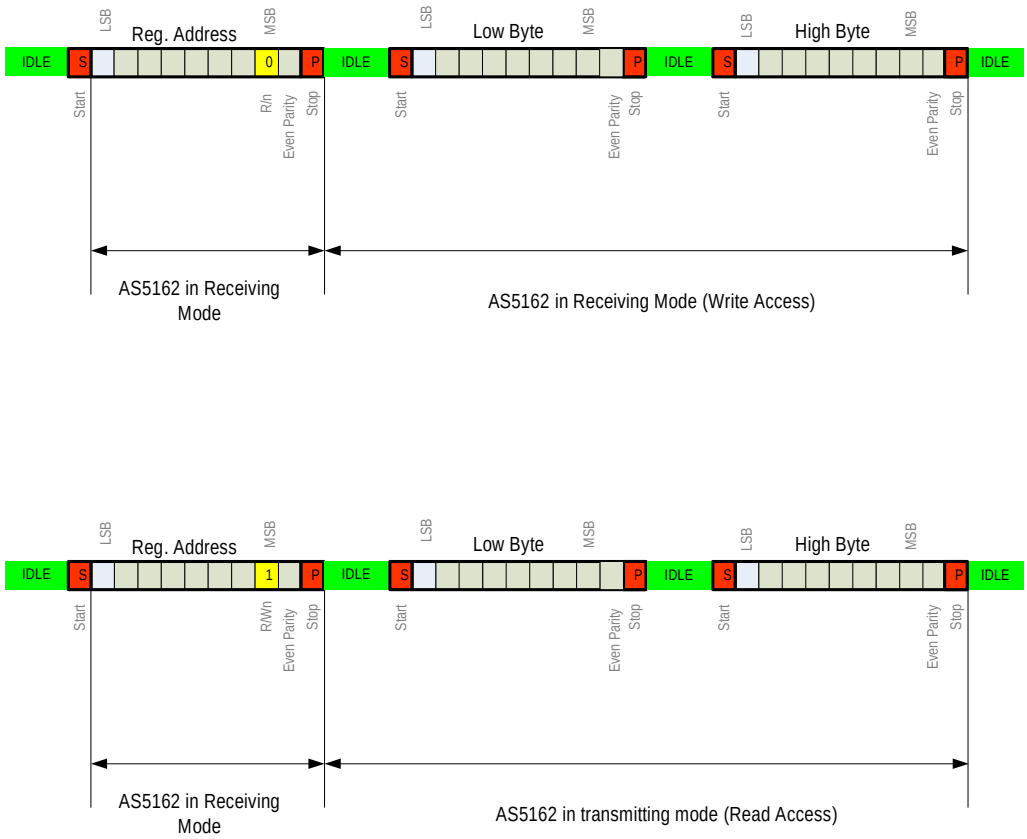

Downloaded from Arrow.com.

OTP Programming Data

Figure 35:
OTP Memory Map

Data Byte	Bit Number	Symbol	Default	Description	
DATA15 (0x0F)	0	Factory Settings	0	**ams** (reserved)	**Factory Settings**
	1		0		
	2		0		
	3		0		
	4		0		
	5		0		
	6		0		
	7		0		
DATA14 (0x0E)	0		0		
	1		0		
	2		0		
	3		0		
	4		0		
	5		0		
	6		0		
	7		0		
DATA13 (0x0D)	0		0		
	1		0		

Downloaded from Arrow.com.

Data Byte	Bit Number	Symbol	Default	Description	
DATA13 (0x0D)	2	CUSTID<0>	0	Customer Identifier	Customer Settings
	3	CUSTID<1>	0		
	4	CUSTID<2>	0		
	5	CUSTID<3>	0		
	6	CUSTID<4>	0		
	7	CUSTID<5>	0		
DATA12 (0x0C)	0	CUSTID<6>	0		
DATA11 (0x0B)	7	CLH<0>	0	Clamping Level High	
DATA10 (0x0A)	0	CLH<1>	0		
	1	CLH<2>	0		
	2	CLH<3>	0		
	3	CLH<4>	0		
	4	CLH<5>	0		
	5	CLH<6>	0		
	6	CLH<7>	0		
	7	CLH<8>	0		

Downloaded from Arrow.com.

Data Byte	Bit Number	Symbol	Default	Description	
DATA9 (0x09)	0	CLL<0>	0	Clamping Level Low	Customer Settings
	1	CLL<1>	0		
	2	CLL<2>	0		
	3	CLL<3>	0		
	4	CLL<4>	0		
	5	CLL<5>	0		
	6	CLL<6>	0		
	7	CLL<7>	0		
DATA8 (0x08)	0	CLL<8>	0		
	1	OFFSET<0>	0	Offset	
	2	OFFSET<1>	0		
	3	OFFSET<2>	0		
	4	OFFSET<3>	0		
	5	OFFSET<4>	0		
	6	OFFSET<5>	0		
	7	OFFSET<6>	0		

Downloaded from Arrow.com.

Data Byte	Bit Number	Symbol	Default	Description	
DATA7 (0x07)	0	OFFSET<7>	0	Offset	Customer Settings
	1	OFFSET<8>	0		
	2	OFFSET<9>	0		
	3	OFFSET<10>	0		
	4	OFFSET<11>	0		
	5	OFFSET<12>	0		
	6	OFFSET<13>	0		
	7	OFFSET<14>	0		
DATA6 (0x06)	0	OFFSET<15>	0		
	1	OFFSET<16>	0		
	2	OFFSET<17>	0		
	3	OFFSET<18>	0		
	4	OFFSET<19>	0		
	5	GAIN<0>	0	Scale Factor	
	6	GAIN<1>	0		
	7	GAIN<2>	0		
DATA5 (0x05)	0	GAIN<3>	0		
	1	GAIN<4>	0		
	2	GAIN<5>	0		
	3	GAIN<6>	0		
	4	GAIN<7>	0		
	5	GAIN<8>	0		
	6	GAIN<9>	0		
	7	GAIN<10>	0		

Downloaded from Arrow.com.

Data Byte	Bit Number	Symbol	Default	Description	
DATA4 (0x04)	0	GAIN<11>	0	Scale Factor	Customer Settings
	1	GAIN<12>	0		
	2	GAIN<13>	0		
	3	GAIN<14>	0		
	4	GAIN<15>	0		
	5	GAIN<16>	0		
	6	BP<0>	0	Break Point	
	7	BP<1>	0		
DATA3 (0x003)	0	BP<2>	0		
	1	BP<3>	0		
	2	BP<4>	0		
	3	BP<5>	0		
	4	BP<6>	0		
	5	BP<7>	0		
	6	BP<8>	0		
	7	BP<9>	0		
DATA2 (0x02)	0	BP<10>	0		
	1	BP<11>	0		
	2	BP<12>	0		
	3	BP<13>	0		
	4	ANGLERNG	0	Sector selection 0=Angular Sector≥22.5 degrees; 1=Angular Sector<22.5 degrees	
	5	DIAG_HIGH	0	Failure Band Selection 0=Failure Band Low 1=Failure Band High	

Downloaded from Arrow.com.

Data Byte	Bit Number	Symbol	Default	Description	
DATA2 (0x02)	6	QUADEN<0>	0	Quadrant Mode Enable 00=1quadrant; 01=2quadrants; 10=3 quadrants; 11=4 quadrants	Customer Settings
	7	QUADEN<1>	0		
DATA1 (0x01)	0	AIRGAPSEL	0	Magnetic input range extension 0:extended range; 1=normal range	
	1	HYSTSEL<0>	0	Hysteresis selection 00=no hysteresis; 01: 56LSB; 10=91LSB; 11=137LSB	
	2	HYSTSEL<1>	0		
	3	Not used	0		
	4	Not used	0		
	5	Not used	0		
	6	Not used	0		
	7	Not used	0		
DATA0 (0x00)	0	RED_ADD<0>	0	Redundancy Address Identify the address of the byte containing the bit to be changed	
	1	RED_ADD<1>	0		
	2	RED_ADD<2>	0		
	3	RED_ADD<3>	0		
	4	RED_BIT<0>	0	Redundancy Bit Identify the position of the bit to be changed in the byte at the address RED_ADD<3:0>	
	5	RED_BIT<1>	0		
	6	RED_BIT<2>	0		
	7	CUST_LOCK	0	Lock bit for Customer Area	

Downloaded from Arrow.com.

READ / WRITE Register Map

Figure 36:
Read/Write Registers

Data Byte	Bit Number	Symbol	Default	Description	
DATA0 (0x20)	0	BAUDREG<0>	0	UART Baud Rate Register	Read/Write Area
	1	BAUDREG<1>	0		
	2	BAUDREG<2>	0		
	3	BAUDREG<3>	0		
	4	BAUDREG<4>	0		
	5	BAUDREG<5>	0		
	6	BAUDREG<6>	0		
	7	BAUDREG<7>	0		
DATA1 (0x21)	0	BAUDREG<8>	0		
	1	Not used	0	A read command returns all data bits at 0	
	2	Not used	0		
	3	Not used	0		
	4	Not used	0		
	5	Not used	0		
	6	Not used	0		
	7	Not used	0		

Downloaded from Arrow.com.

Data Byte	Bit Number	Symbol	Default	Description	
DATA2 (0x22)	0	DAC12IN<8>	0	DAC12 buffer value	Read/Write Area
	1	DAC12IN<9>	0		
	2	DAC12IN<10>	0		
	3	DAC12IN<11>	0		
	4	DAC12INSEL	0	DAC12 buffer selection	
	5	R1K10K<0>	0	Selection of the reference resistance used for OTP download	
	6	R1K10K<1>	0		
	7	DSPRN	0	Resetn of the Digital Signal Processing circuit	
DATA3 (0x23)	0	DAC12IN<0>	0	DAC12 buffer value	
	1	DAC12IN<1>	0		
	2	DAC12IN<2>	0		
	3	DAC12IN<3>	0		
	4	DAC12IN<4>	0		
	5	DAC12IN<5>	0		
	6	DAC12IN<6>	0		
	7	DAC12IN<7>	0		

Downloaded from Arrow.com.

READ Only Register Map

Figure 37:
Read Only Registers

Data Byte	Bit Number	Symbol	Default	Description	
DATA0 (0x28)	0	Not used	0	A read command returns 0	Read Area
	1	OFFSETFINISHED	0	Offset compensation finished	
	2	AGCFINISHED	0	AGC loop compensation finished	
	3	CORDICOVF	0	Overflow of the CORDIC	
	4	AGCALARML	0	AGC loop saturation because of B field too strong	
	5	AGCALARMH	0	AGC loop saturation because of B field too weak	
	6	OTP_RES	0	0=1K resistance selected for OTP download; 1=10K resistance selected for OTP download	
	7	PARITY_ERR	0	UART parity error flag	

Downloaded from Arrow.com.

Data Byte	Bit Number	Symbol	Default	Description	
DATA1 (0x29)	0	CORDICOUT<0>	0	CORDIC Output	Read Area
	1	CORDICOUT<1>	0		
	2	CORDICOUT<2>	0		
	3	CORDICOUT<3>	0		
	4	CORDICOUT<4>	0		
	5	CORDICOUT<5>	0		
	6	CORDICOUT<6>	0		
	7	CORDICOUT<7>	0		
DATA2 (0x2A)	0	CORDICOUT<8>	0		
	1	CORDICOUT<9>	0		
	2	CORDICOUT<10>	0		
	3	CORDICOUT<11>	0		
	4	CORDICOUT<12>	0		
	5	CORDICOUT<13>	0		
	6	Not used	0	A read command returns all data bits at 0	
	7	Not used	0		
DATA3 (0x2B)	0	DSPOUT<0>	0	DSP Output	
	1	DSPOUT<1>	0		
	2	DSPOUT<2>	0		
	3	DSPOUT<3>	0		
	4	DSPOUT<4>	0		
	5	DSPOUT<5>	0		
	6	DSPOUT<6>	0		
	7	DSPOUT<7>	0		

Downloaded from Arrow.com.

Data Byte	Bit Number	Symbol	Default	Description	
DATA4 (0x2C)	0	DSPOUT<8>	0	DSP Output	Read Area
	1	DSPOUT<9>	0		
	2	DSPOUT<10>	0		
	3	DSPOUT<11>	0		
	4	Not used	0	A read command returns all data bits at 0	
	5	Not used	0		
	6	Not used	0		
	7	Not used	0		
DATA5 (0x2D)	0	AGCVALUE<0>	0	AGC Value	
	1	AGCVALUE<1>	0		
	2	AGCVALUE<2>	0		
	3	AGCVALUE<3>	0		
	4	AGCVALUE<4>	0		
	5	AGCVALUE<5>	0		
	6	AGCVALUE<6>	0		
	7	AGCVALUE<7>	0		
DATA6 (0x2E)	0	MAG<0>	0	Magnitude of magnetic field	
	1	MAG<1>	0		
	2	MAG<2>	0		
	3	MAG<3>	0		
	4	MAG<4>	0		
	5	MAG<5>	0		
	6	MAG<6>	0		
	7	MAG<7>	0		

Downloaded from Arrow.com.

Data Byte	Bit Number	Symbol	Default	Description	
DATA7 (0x2F)	0	Not used	0	A read command returns all data bits at 0	Read Area
	1	Not used	0		
	2	Not used	0		
	3	Not used	0		
	4	Not used	0		
	5	Not used	0		
	6	Not used	0		
	7	Not used	0		

Special Registers

Figure 38:
Special Registers

Data Byte	Bit Number	Symbol	Default	Description	
DATA0 (0x41)	0	AS5162KEY<0>	0	AS5162 KEY<15:0>=0101 0001 0110 0010 A write command with data different from AS5162 KEY is not executed A read command returns all data bits at 0	Fuse Register
	1	AS5162KEY<1>	0		
	2	AS5162KEY<2>	0		
	3	AS5162KEY<3>	0		
	4	AS5162KEY<4>	0		
	5	AS5162KEY<5>	0		
	6	AS5162KEY<6>	0		
	7	AS5162KEY<7>	0		
DATA1 (0x42)	0	AS5162KEY<8>	0		
	1	AS5162KEY<9>	0		
	2	AS5162KEY<10>	0		
	3	AS5162KEY<11>	0		
	4	AS5162KEY<12>	0		
	5	AS5162KEY<13>	0		
	6	AS5162KEY<14>	0		
	7	AS5162KEY<15>	0		

Downloaded from Arrow.com.

Data Byte	Bit Number	Symbol	Default	Description	
DATA0 (0x60)	0	AS5162KEY<0>	0	AS5162 KEY<15:0>=0101 0001 0110 0010 A write command with data different from AS5162 KEY is not executed A read command returns all data bits at 0	**Pass2Func Register**
	1	AS5162KEY<1>	0		
	2	AS5162KEY<2>	0		
	3	AS5162KEY<3>	0		
	4	AS5162KEY<4>	0		
	5	AS5162KEY<5>	0		
	6	AS5162KEY<6>	0		
	7	AS5162KEY<7>	0		
DATA1 (0x61)	0	AS5162KEY<8>	0		
	1	AS5162KEY<9>	0		
	2	AS5162KEY<10>	0		
	3	AS5162KEY<11>	0		
	4	AS5162KEY<12>	0		
	5	AS5162KEY<13>	0		
	6	AS5162KEY<14>	0		
	7	AS5162KEY<15>	0		

Downloaded from Arrow.com.

Programming Procedure

- Pull-Up on out pin
- VDD=5V
- Wait 10ms (after the startup time device enters communication mode)
- Write command: Trimming bits are written in the OTP RAM
- Read command: All the trimming bits are read back to check the correctness of the writing procedure.
- Write AS5162KEY in the Fuse register: The OTP RAM content is permanently transferred into the Poly Fuse cells.
- Wait 10 ms (fuse time)
- Write command, R1K_10K<1:0>=(11)b: Poly Fuse cells are downloaded into the RAM memory using a 10K resistance as reference.
- Wait 5 ms (download time)
- Read R1K_10K register, the expected value is 00b
- Write command, R1K_10K<1:0>=(11)b
- Read R1K_10K register, the expected value is (11)b. NB: Step11 and Step12 have to be consecutive.
- Read command: all the fused bits downloaded with 10K resistance are read back.
- Write command, R1K_10K=<1:0>=(10)b: Poly Fuse cells are downloaded into the RAM memory using a 1K resistance as reference.
- Wait 5 ms (download time)
- Read R1K_10K register, the expected value is (00)b
- Write command register, R1K_10K<1:0>=(10)b
- Read R1K_10K register, the expected value is (10)b NB: Step18 and Step19 have to be consecutive.
- Read command: All the fused bits downloaded with 1K resistance are read back.
- Check that read commands at Steps 5, 13 and 19 are matching
- Write AS5162KEY in the Pass2Func register: Device enters normal mode.

Downloaded from Arrow.com.

Mechanical Data

The internal Hall elements are placed in the center of the package on a circle with a radius of 1.25mm.

Figure 39:
Hall Element Positions

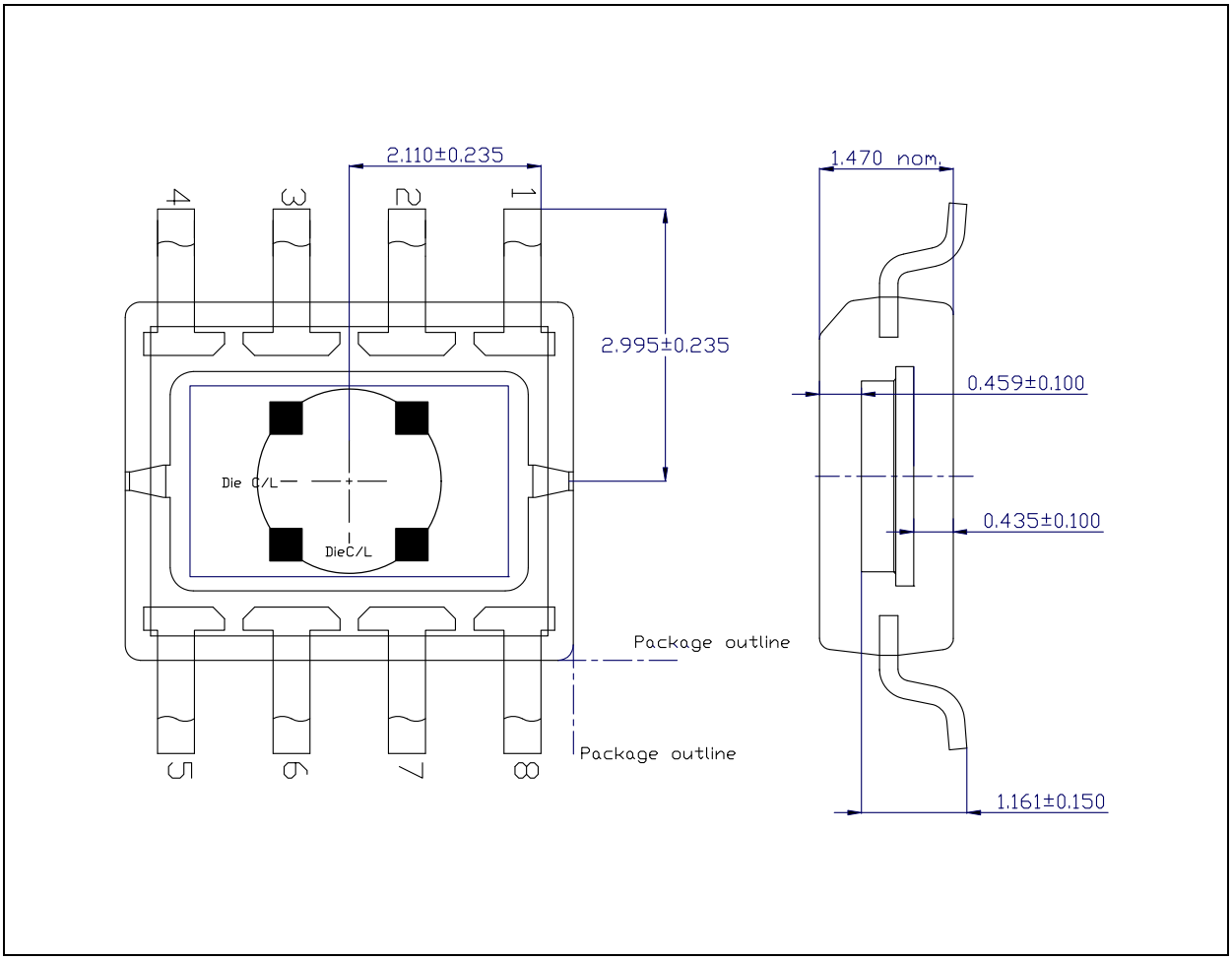

Note(s) and/or Footnote(s):

1. All dimensions in mm.
2. Die thickness 356µm nom.
3. Adhesive thickness 2 0 ± 10µm.
4. Lead frame downest 200 ± 25µm.
5. Lead frame thickness 200 ± 8µm.

Downloaded from Arrow.com.

Package Drawings & Markings

The device is available in a SOIC 8 - Lead 150 MIL Package.

Figure 40:
Package Drawings and Dimensions

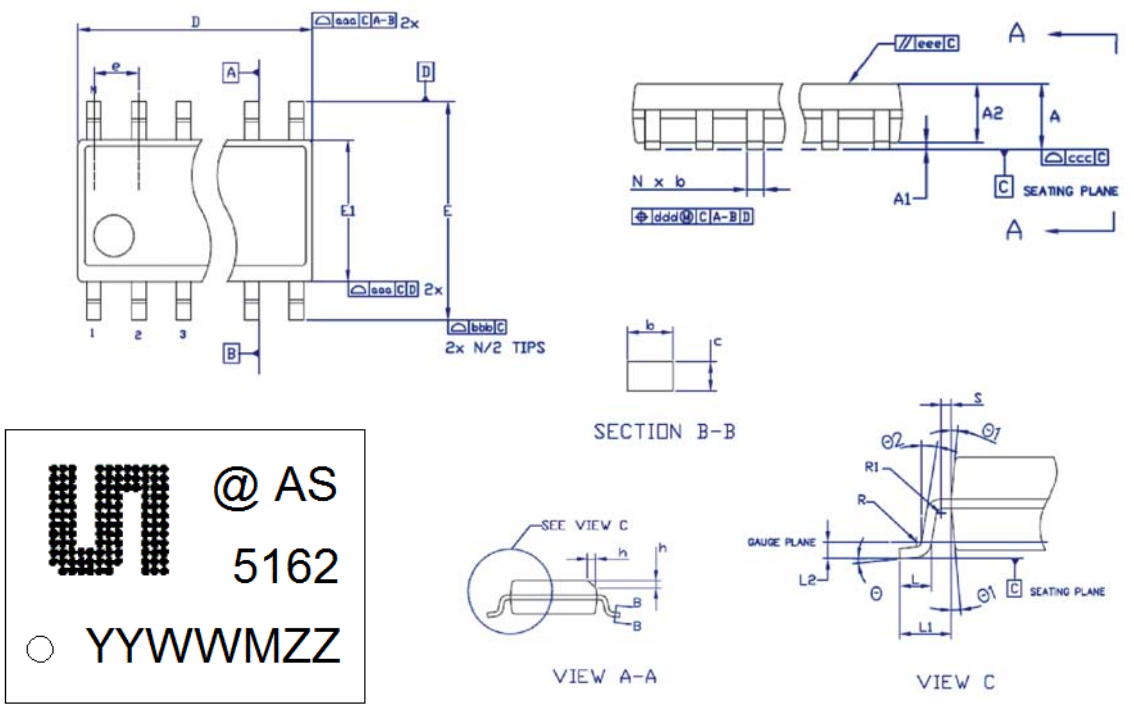

Symbol	Min	Nom	Max
A	-	-	1.75
A1	0.10	-	0.25
A2	1.25	-	-
b	0.31	-	0.51
c	0.17	-	0.25
D	-	4.90 BSC	-
E	-	6.00 BSC	-
E1	-	3.90 BSC	-
e	-	1.27 BSC	-
L	0.40	-	1.27
L1	-	1.04 REF	-
L2	-	0.25 BSC	-

Symbol	Min	Typ	Max
R	0.07	-	-
R1	0.07	-	-
h	0.25	-	0.50
Q	0°	-	8°
Θ1	5°	-	15°
Θ2	0°	-	-
aaa	-	0.10	-
bbb	-	0.20	-
ccc	-	0.10	-
ddd	-	0.25	-
eee	-	0.10	-
fff	-	0.15	-
N	-	8	-

Note(s) and/or Footnote(s):

1. Dimensions and tolerancing confirm to *ASME Y14.5M-1994*.
2. All dimensions are in miilimeters. Angles are in degrees.

Figure 41:
Package Marking: @YYWWMZZ

@	YY	WW	M	ZZ
Sublot identifier	Year	Week	Assembly plant identifier	Assembly traceability code

Downloaded from Arrow.com.

Ordering & Contact Information

The devices are available as the standard products shown in Figure 42.

Figure 42:
Ordering Information

Ordering Code	Description	Package	Delivery Form	Delivery Quantity
AS5162-HSOP	12-Bit Programmable Angle Position Sensor with analog output	SOIC - 8	Tape & Reel	2500 pcs/reel
AS5162-HSOM				500 pcs/reel

Buy our products or get free samples online at:
www.ams.com/ICdirect

Technical Support is available at:
www.ams.com/Technical-Support

Provide feedback about this document at:
www.ams.com/Document-Feedback

For further information and requests, e-mail us at:
ams_sales@ams.com

For sales offices, distributors and representatives, please visit:
www.ams.com/contact

Headquarters
ams AG
Tobelbaderstrasse 30
8141 Unterpremstaetten
Austria, Europe

Tel: +43 (0) 3136 500 0

Website: www.ams.com

Downloaded from Arrow.com.

RoHS Compliant & ams Green Statement

RoHS: The term RoHS compliant means that ams AG products fully comply with current RoHS directives. Our semiconductor products do not contain any chemicals for all 6 substance categories, including the requirement that lead not exceed 0.1% by weight in homogeneous materials. Where designed to be soldered at high temperatures, RoHS compliant products are suitable for use in specified lead-free processes.

ams Green (RoHS compliant and no Sb/Br): ams Green defines that in addition to RoHS compliance, our products are free of Bromine (Br) and Antimony (Sb) based flame retardants (Br or Sb do not exceed 0.1% by weight in homogeneous material).

Important Information: The information provided in this statement represents ams AG knowledge and belief as of the date that it is provided. ams AG bases its knowledge and belief on information provided by third parties, and makes no representation or warranty as to the accuracy of such information. Efforts are underway to better integrate information from third parties. ams AG has taken and continues to take reasonable steps to provide representative and accurate information but may not have conducted destructive testing or chemical analysis on incoming materials and chemicals. ams AG and ams AG suppliers consider certain information to be proprietary, and thus CAS numbers and other limited information may not be available for release.

Downloaded from Arrow.com.

Copyrights & Disclaimer

Copyright ams AG, Tobelbader Strasse 30, 8141 Unterpremstaetten, Austria-Europe. Trademarks Registered. All rights reserved. The material herein may not be reproduced, adapted, merged, translated, stored, or used without the prior written consent of the copyright owner.

Devices sold by ams AG are covered by the warranty and patent indemnification provisions appearing in its General Terms of Trade. ams AG makes no warranty, express, statutory, implied, or by description regarding the information set forth herein. ams AG reserves the right to change specifications and prices at any time and without notice. Therefore, prior to designing this product into a system, it is necessary to check with ams AG for current information. This product is intended for use in commercial applications. Applications requiring extended temperature range, unusual environmental requirements, or high reliability applications, such as military, medical life-support or life-sustaining equipment are specifically not recommended without additional processing by ams AG for each application. This product is provided by ams AG "AS IS" and any express or implied warranties, including, but not limited to the implied warranties of merchantability and fitness for a particular purpose are disclaimed.

ams AG shall not be liable to recipient or any third party for any damages, including but not limited to personal injury, property damage, loss of profits, loss of use, interruption of business or indirect, special, incidental or consequential damages, of any kind, in connection with or arising out of the furnishing, performance or use of the technical data herein. No obligation or liability to recipient or any third party shall arise or flow out of ams AG rendering of technical or other services.

Downloaded from Arrow.com.

Document Status

Document Status	Product Status	Definition
Product Preview	Pre-Development	Information in this datasheet is based on product ideas in the planning phase of development. All specifications are design goals without any warranty and are subject to change without notice
Preliminary Datasheet	Pre-Production	Information in this datasheet is based on products in the design, validation or qualification phase of development. The performance and parameters shown in this document are preliminary without any warranty and are subject to change without notice
Datasheet	Production	Information in this datasheet is based on products in ramp-up to full production or full production which conform to specifications in accordance with the terms of ams AG standard warranty as given in the General Terms of Trade
Datasheet (discontinued)	Discontinued	Information in this datasheet is based on products which conform to specifications in accordance with the terms of ams AG standard warranty as given in the General Terms of Trade, but these products have been superseded and should not be used for new designs

Downloaded from Arrow.com.

Revision Information

Changes from 1.3 (2013-Oct-31) to current revision 1-06 (2015-Dec-07)	Page
1.3 (2013-Oct-31) to 1-04 (2015-Aug-07)	
Content was updated to the latest **ams** design	
Noise Suppressor section was removed	
Updated Key Benefits & Features	2
Updated Figure 36	26
Added Mechanical Data section	40
Updated Package Drawings & Markings section	41
Updated Figure 44	42
1-04 (2015-Aug-07) to 1-05 (2015-Nov-19)	
Removed Linearization of the Output section	
Updated text under Detailed Description	9
Updated Figure 13	11
Updated Figure 19	15
1-05 (2015-Nov-19) to 1-06 (2015-Dec-07)	
Updated Figure 2	2
Updated Figure 35 [DATA11 (0x0B), DATA12 (0x0C)]	26
Updated Mechanical Data section	40

Note(s) and/or Footnote(s):

1. Page and figure numbers for the previous version may differ from page and figure numbers in the current revision.
2. Correction of typographical errors is not explicitly mentioned.

Downloaded from Arrow.com.

Content Guide

1 General Description
2 Key Benefits & Features
2 Applications
3 Block Diagram

4 Pin Assignment
5 Absolute Maximum Ratings

6 Electrical Characteristics
6 Operating Conditions
6 Magnetic Input Specification
7 Electrical System Specifications
8 Timing Characteristics
8 Power Management - Supply Monitor

9 Detailed Description
10 Operation
10 VDD Voltage Monitor
10 Analog Output
11 Programming Parameters
12 Application Specific Angular Range Programming
13 Application Specific Programming of the Break Point
13 Full Scale Mode
14 Multiple Slope Output
15 Resolution of Parameters
16 Analog Output Diagnostic Mode
17 Analog Output Driver Parameters
17 Hysteresis Function

18 Application Information
18 Recommended Application Schematic
20 Programming the AS5162
20 UART Interface for Programming
21 Frame Organization
23 WRITE (Command Description)
24 READ (Command Description)
24 Baud-Rate Automatic Detection
25 Baud-Rate Manual Setting (Optional)
26 OTP Programming Data
32 READ / WRITE Register Map
34 READ Only Register Map
37 Special Registers
39 Programming Procedure
40 Mechanical Data

41 Package Drawings & Markings
42 Ordering & Contact Information
43 RoHS Compliant & ams Green Statement
44 Copyrights & Disclaimer
45 Document Status
46 Revision Information

Downloaded from Arrow.com.