16mm XA E-Stops

Key features:

- Two button sizes: ø29 and ø40mm
- Lead-free, RoHS compliant, (EU directive 2002/95/EC)
- Depth behind the panel:
  Standard - only 27.9mm for 1 to 4 contacts
  Unibody - only 23.9mm for 1NC or 2NC
- IDEC's original "Safe break action" ensures that the NC contacts open when the contact block is detached from the operator.
- Push-to-lock, Pull or Turn-to-reset operator
- Direct opening action mechanism (IEC60947-5-5, 5.2, IEC60947-5-1, Annex K)
- Safety lock mechanism (IEC60947-5-5, 6.2)
- Degree of protection:
  Standard - IP65 (IEC60529)
  Unibody - IP65 and IP40 (IEC 60529)
- UL, c-UL recognized. EN compliant
- UL NISD2 category emergency stop button (File# E305148)

UL File No. E68691

CCC No. 2005010305150899

Specifications

Model	Standard	Unibody
Applicable Standards	IEC60947-5-1, EN60947-5-1, IEC60947-5-5, EN60947-5-5, UL508, UL991, CSA C22.2 No. 14	UL508, CSA C22.2 No.14, IEC 60947-5-1, EN 60947-5-1 IEC 60947-5-5 Note, EN 60947-5-5 Note, JIS C8201-5-1
Operating Temperature	Non-illuminated: –25 to +60°C (no freezing), Illuminated: –25 to +55°C (no freezing)	–25 to +60°C (no freezing)
Operating Humidity	45 to 85% RH (no condensation)	
Storage Temperature	–45 to +80°C	
Operating Force	Push-to-lock: 10.5N Pull-to-reset: 10N Turn-to-reset: 0.16N·m	
Minimum Force Required for Direct Opening Action	60N	40N
Min Operator Stroke Required for Direct Opening Action	4mm	
Maximum Operator Stroke	4.5mm	
Contact Resistance	50mΩ maximum (initial value)	
Contact Material	Gold plated silver	
Insulation Resistance	100MΩ minimum (500V DC megger)	
Impulse Withstand Voltage	2.5kV	
Pollution Degree	3 (inside LED unit: 2)	3
Operation Frequency	900 operations/hour	
Shock Resistance	Operating extremes: 150 m/s^2, Damage limits: 1000 m/s^2	
Vibration Resistance	Operating extremes: 10 to 500Hz, amplitude 0.35mm acceleration 50m/s^2, Damage limits: 10 to 500Hz, amplitude 0.35mm acceleration 50m/s^2	
Mechanical Life	250,000 operations minimum	
Electrical Life	100,000 operations minimum, (250,000 operations minimum @ 24V AC/DC, 100mA)	
Degree of Protection	IP65 (IEC60529)	IP65, IP40 (IEC 60529)
Terminal Style	Solder terminal, PC board terminal	Solder/tab #110 terminal
Recommended Tightening Torque for Locking Ring	0.88N·m	
Wire Size	16 AWG max	
Soldering Conditions	310 to 350°C, 3 seconds maximum	
Weight	ø29mm: 23g ø40mm: 28g	ø29mm mushroom: 14g ø40mm mushroom: 17g

Note: Except for stop switches (operator color: yellow and gray)

Downloaded from Arrow.com.

Part Numbers

Non-Illuminated XA E-Stop

Style	Termination	Monitor Contacts	Main Contacts	Part Number
29mm Mushroom	PCB Terminal	1NO	1NC	XA1E-BV311V-R
		–	2NC	XA1E-BV302V-R
		1NO	3NC	XA1E-BV313V-R
		–	4NC	XA1E-BV304V-R
	Solder Terminal	1NO	1NC	XA1E-BV311-R
		–	2NC	XA1E-BV302-R
		1NO	3NC	XA1E-BV313-R
		–	4NC	XA1E-BV304-R
40mm Mushroom	PCB Terminal	1NO	1NC	XA1E-BV411V-R
		–	2NC	XA1E-BV402V-R
		1NO	3NC	XA1E-BV413V-R
		–	4NC	XA1E-BV404V-R
	Solder Terminal	1NO	1NC	XA1E-BV411-R
		–	2NC	XA1E-BV402-R
		1NO	3NC	XA1E-BV413-R
		–	4NC	XA1E-BV404-R

Illuminated XA E-Stop

Style	Termination	Monitor Contacts	Main Contacts	Part Number
29mm Mushroom	PCB Terminal	1NO	1NC	XA1E-LV311Q4V-R
		–	2NC	XA1E-LV302Q4V-R
		1NO	3NC	XA1E-LV313Q4V-R
		–	4NC	XA1E-LV304Q4V-R
	Solder Terminal	1NO	1NC	XA1E-LV311Q4-R
		–	2NC	XA1E-LV302Q4-R
		1NO	3NC	XA1E-LV313Q4-R
		–	4NC	XA1E-LV304Q4-R
40mm Mushroom	PCB Terminal	1NO	1NC	XA1E-LV411Q4V-R
		–	2NC	XA1E-LV402Q4V-R
		1NO	3NC	XA1E-LV413Q4V-R
		–	4NC	XA1E-LV404Q4V-R
	Solder Terminal	1NO	1NC	XA1E-LV411Q4-R
		–	2NC	XA1E-LV402Q4-R
		1NO	3NC	XA1E-LV413Q4-R
		–	4NC	XA1E-LV404Q4-R

All illuminated XA E-Stops come with a replaceable 24V AC/DC LED.

Part Number Key

XA1E - L V 3 11 Q4 V - R

Illumination
B: Non-Illuminated
L: Illuminated

Mushroom Size
3: ø29mm
4: ø40mm

Contact Configuration
11: 1NO - 1NC
02: 2NC
13: 1NO - 3NC
04: 4NC

Voltage Code
Blank: Non-illuminated
Q4: Illuminated 24V AC/DC

Terminal
Blank: solder tab
V: PCB

Downloaded from Arrow.com.

Unibody XA E-Stop

Style	Contact	Part Number	
		IP40 (black housing)	IP65 (yellow housing)
29mm Mushroom	1NC	XA1E-BV3U01KT-R	XA1E-BV3U01T-R
	2NC	XA1E-BV3U02KT-R	XA1E-BV3U02T-R
40mm Mushroom	1NC	XA1E-BV4U01KT-R	XA1E-BV4U01T-R
	2NC	XA1E-BV4U02KT-R	XA1E-BV4U02T-R

Unibody XA Stop Switch

Style	Operator Type	Contact	① Color Code	Part Number	
				IP40 (black housing)	IP65 (yellow housing)
	29mm Mushroom	1NC	Y: yellow N: gray	XA1E-BV3U01KT-①	XA1E-BV3U01T-①
		2NC		XA1E-BV3U02KT-①	XA1E-BV3U02T-①
	40mm Mushroom	1NC		XA1E-BV4U01KT-①	XA1E-BV4U01T-①
		2NC		XA1E-BV4U02KT-①	XA1E-BV4U02T-①

EMO XA E-Stop

Style	NC Main Contact	NO Monitor Contact	Part Number
40mm Mushroom	1NC	-	XA1E-BV401-RH-EMO
	2NC	-	XA1E-BV402-RH-EMO
	3NC	-	XA1E-BV403-RH-EMO
	4NC	-	XA1E-BV404-RH-EMO
	1NC	1NO	XA1E-BV411-RH-EMO
	2NC	1NO	XA1E-BV412-RH-EMO
	3NC	1NO	XA1E-BV413-RH-EMO

Downloaded from Arrow.com.

Contact Ratings

Standard						
Rated Insulation Voltage (Ui)				300V (illuminated part: 60V)		
Rated Current (Ith)				5A		
Rated Operating Voltage (Ue)				30V	125V	250V
Rated Operating Current	Main Contacts (NC)	AC 50/60Hz	Resistive Load (AC-12)	–	3A	3A
			Inductive Load (AC-15)	–	1.5A	1.5A
		DC	Resistive Load (DC-12)	2A	0.4A	0.2A
			Inductive Load (DC-13)	1A	0.22A	0.1A
	Monitor Contacts (NO)	AC 50/60Hz	Resistive Load (AC-12)	–	1.2A	0.6A
			Inductive Load (AC-14)	–	0.6A	0.3A
		DC	Resistive Load (DC-12)	2A	0.4A	0.2A
			Inductive Load (DC-13)	1A	0.22A	0.1A
Unibody						
Rated Insulation Voltage (Ui)				250V		
Thermal Current (Ith)				5A		
Rated Operating Voltage (Ue)				30V	125V	250V
Rated Operating Current	AC 50/60Hz		Resistive Load (AC-12)	–	5A	3A
			Inductive Load (AC-15)	–	3A	1.5A
	DC		Resistive Load (DC-12)	2A	0.4A	0.2A
			Inductive Load (DC-13)	1A	0.22A	0.1A

Minimum applicable load: 5V AC/DC, 1mA (reference value).
The rated operating currents are measured at resistive/inductive load types specified in IEC 60947-5-1.

Mounting Hole Layout

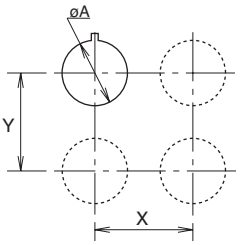

Measurements

Model	øA	X & Y
ø29mm	$16.2^{+0.2}$	40mm min
ø40mm		50mm min

Panel Cutout

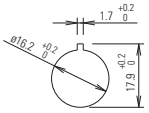

PC Board Layout - Bottom View

Non-Illuminated

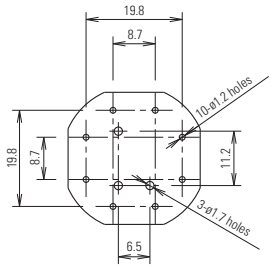

Illuminated

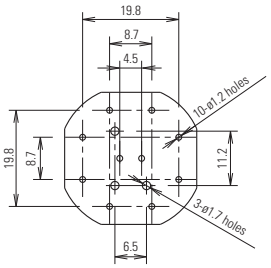

Illuminated Unit LED Ratings

Operating Voltage	Current
24V AC/DC ±10%	11mA

Depth Behind the Panel

Depth (mm)	Description
27.9 (Standard)	1 - 4 contacts, both illuminated and non-illuminated
23.9 (Unibody)	1NC or 2NC

Terminal Arrangements (Bottom View)

4NC 1NO-3NC 2NC 1NO-1NC

Non-Illuminated

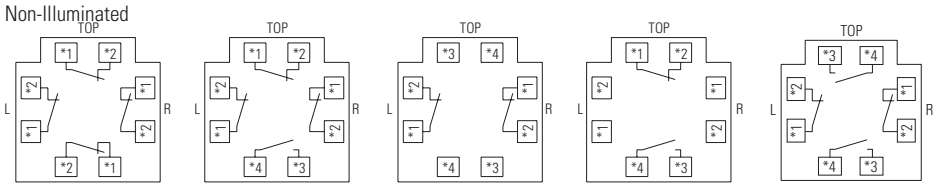

Illuminated

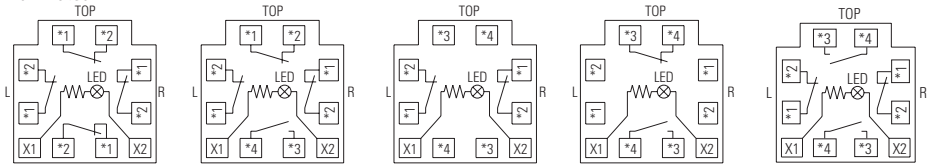

Downloaded from Arrow.com.

Dimensions (mm)

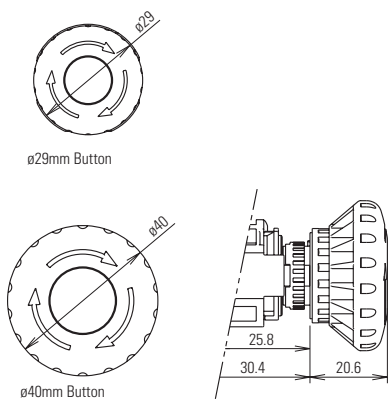

Non-Illuminated

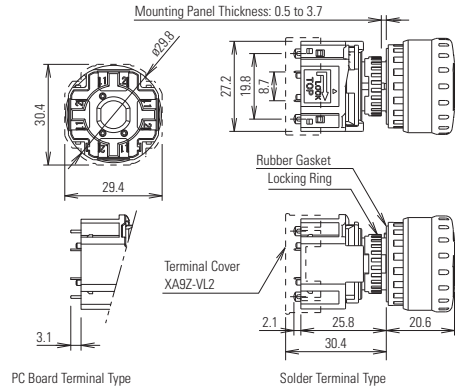

Illuminated

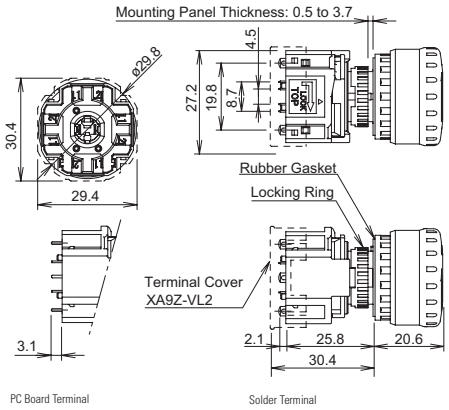

Unibody

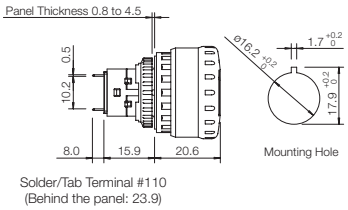

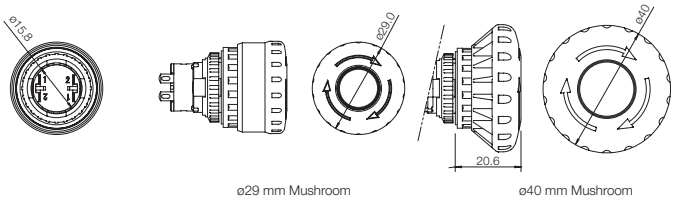

EMO

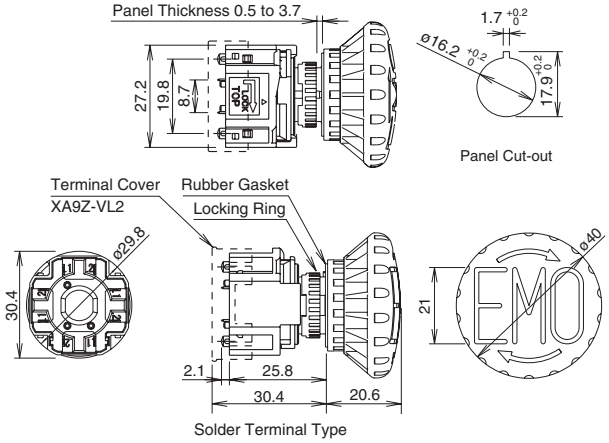

Accessories

Description	Part Numbers
Replacement LED Unit: Solder Terminal	XA9Z-LED2R
Replacement LED Unit: PCB Terminal	XA9Z-LED2VR
Terminal Cover for contact block (solder terminal only)	XA9Z-VL2

Accessories: Shroud

Appearance	Part Number	Applicable Standards
	XA9Z-KG1	SEMI S2 Compliant (Approved by TUV)

Accessories: Nameplates

Appearance	Legend	Part Number	Inner Ø	Outer Ø	Applicable Mushroom Size
	(blank)	HAAV-0	16mm	43mm	29mm
	"Emergency Stop"	HAAV-27	16mm	43mm	
	(blank)	HAAV4-0	16mm	60mm	40mm
	"Emergency Stop"	HAAV4-27	16mm	60mm	

Downloaded from Arrow.com.

Operating Instructions

Removing the Contact Block

First unlock the operator button. While pushing up the white bayonet ring, using a small screwdriver (width: 2.5 to 3 mm) if necessary, turn the contact block counterclockwise and pull out. **Do not exert excessive force when using a screwdriver, otherwise the bayonet ring may be damaged.**

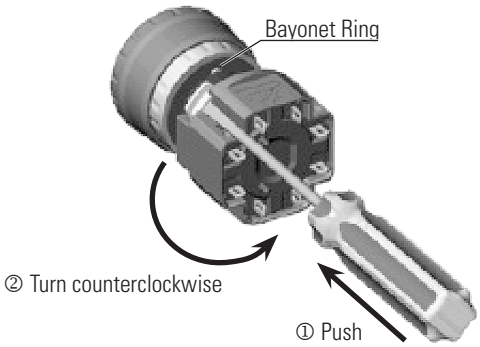

Notes for Removing the Contact Block

1. When the contact block is removed, the monitor contact (NO contact) is closed.
2. While removing the contact block, do not exert excessive force, otherwise the switch may be damaged.

Panel Mounting

Remove the locking ring from the operator and check that the rubber gasket is in place. Insert the operator from panel front into the panel hole. Face the side with the anti-rotation tab on the operator upward, and tighten the locking ring.

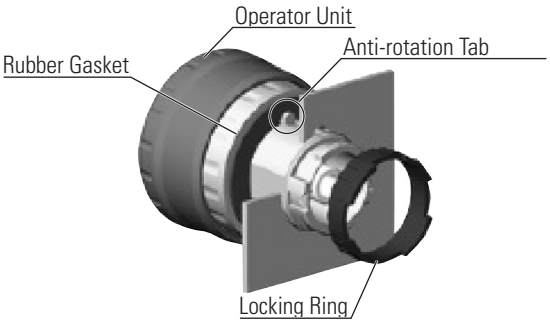

Notes for Panel Mounting

To mount XA emergency stop switches onto a panel, tighten the locking ring to a tightening torque of 0.88 N·m maximum using ring wrench MT-001. Do not use pliers. Do not exert excessive force, otherwise the locking ring may be damaged.

Installing the Contact Block

First turn the bayonet ring to the unlocked position.

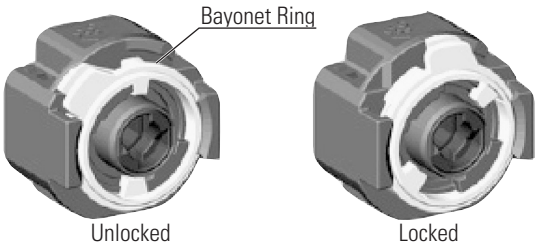

Align the small ▲ marking on the edge of the operator base with the TOP marking on the contact block. Press the contact block onto the operator and turn the contact block clockwise until the bayonet ring clicks.

Notes for Installing the Contact Block

Check that the contact block is securely installed on the operator. When the emergency stop switch is properly assembled, the bayonet ring is in place as shown below.

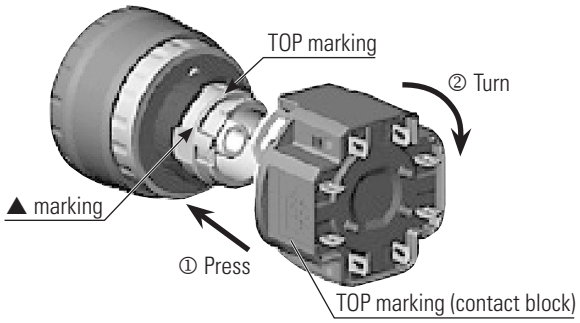

Removing the LED Unit

Pull out the LED unit while squeezing the latches on the LED unit using the LED unit removal tool (MT-101).

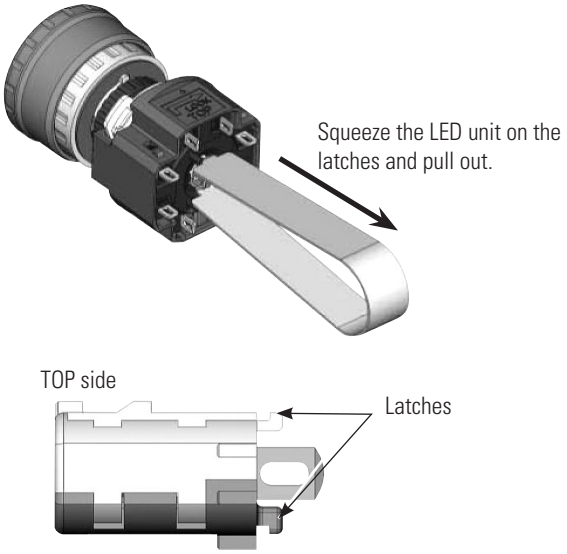

Installing the LED Unit

Align the top of the LED unit with the TOP marking on the contact block. Push the LED unit into the contact block.

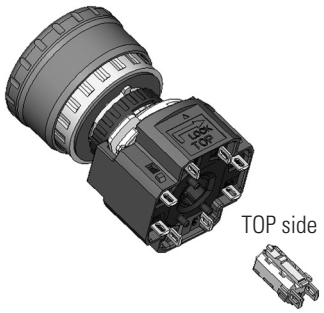

Downloaded from Arrow.com.

Operating Instructions, continued

Wiring

1. The applicable wire size is 16 AWG maximum.
2. Solder the terminal at a temperature of 310 to 350°C within 3 seconds using a soldering iron. Sn-Ag-Cu solder is recommended. When soldering, do not touch the switch with the soldering iron. Also ensure that no tensile force is applied to the terminals. Do not bend the terminals or apply excessive force to the terminals.
3. Use a non-corrosive rosin flux.
4. Because the terminal spacing is narrow, use protective tubes or heat shrinkable tubes to avoid burning of wire coating or short circuit.

PC Board Terminal Type

1. When mounting a contact block on a PC board, provide sufficient rotating space for the PC board when installing and removing the contact block.
2. When mounting an XA emergency stop switch on a PC board, make sure that the operator is securely installed.

About PC Board and Circuit Design

1. Use PC boards made of glass epoxy copper-clad laminated sheets of 1.6 mm in thickness, with double-sided through holes.
2. PC boards and circuits must withstand rated voltage and current, including instantaneous current and voltage at switching.
3. The minimum applicable load is 5V AC/DC, 1 mA.
4. Within the 2.8* mm areas shown in the figure below, terminals touch the PC board, resulting in possible short circuit on the printed circuit. When designing a PC board pattern, take this possibility into consideration.

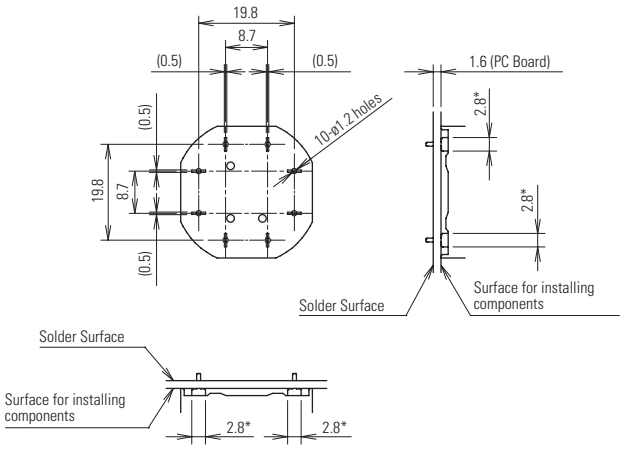

All dimensions in mm.

Installing Insulation Terminal Cover

To install the terminal cover (XA9Z-VL2), align the TOP marking on the terminal cover with TOP marking on the contact block, and press the terminal cover toward the contact block.

Note: For wiring, insert the wires into the holes in the terminal cover before soldering.

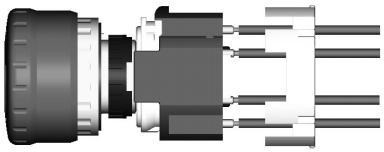

Contact Bounce

When the button is reset by pulling or turning, the NC main contacts will bounce. When pressing the button, the NO monitor contacts will bounce.

When designing a control circuit, take the contact bounce time into consideration (reference value: 20 ms).

Nameplate

When anti-rotation is not required, remove the projection from the nameplate using pliers.

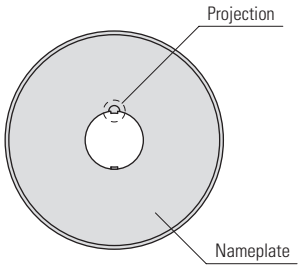

Handling

Do not expose the switch to excessive shock and vibration, otherwise the switch may be deformed or damaged, causing malfunction or operation failure.

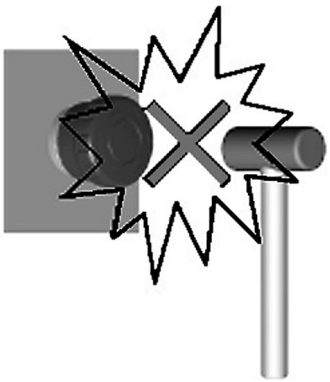

Safety Precautions

- Turn off power to the XA series emergency stop switch before starting installation, removal, wiring, maintenance, and inspection of the relays. Failure to turn power off may cause electrical shock or fire hazard.
- Use the LED unit removal tool when replacing the LED unit to avoid burning your hands.
- Use wires of the proper size to meet the voltage and current requirements, and solder the wires correctly. If soldering is incomplete, the wire may heat during operation, causing a fire hazard.

Downloaded from Arrow.com.