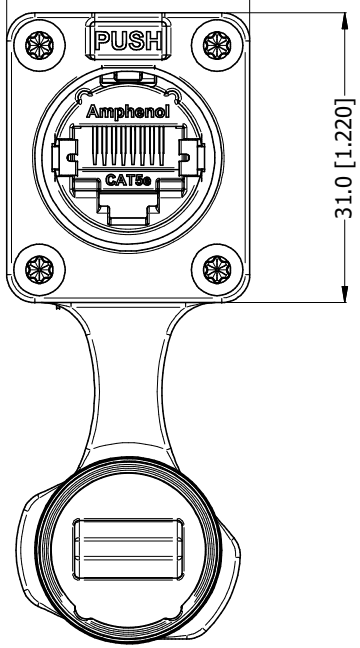

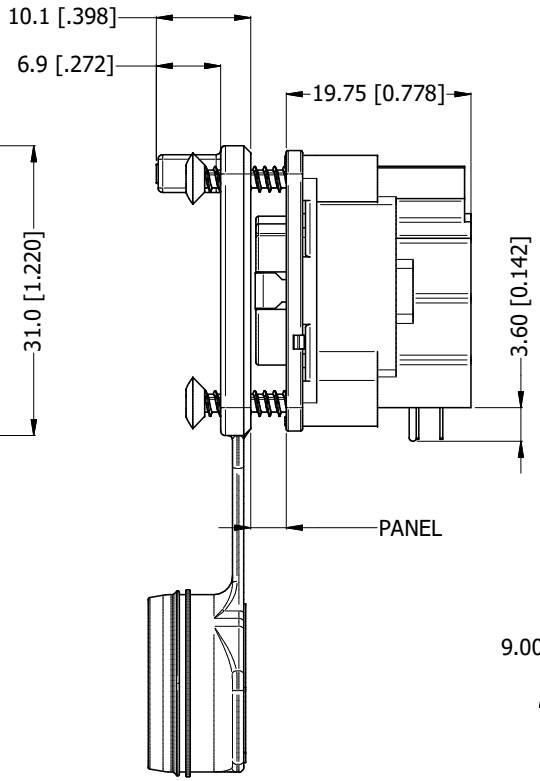

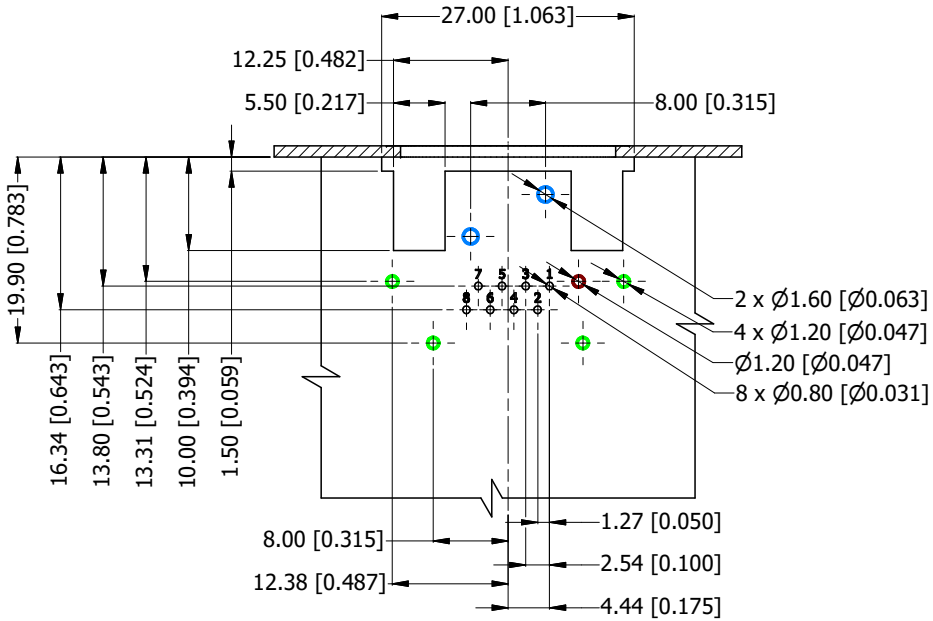

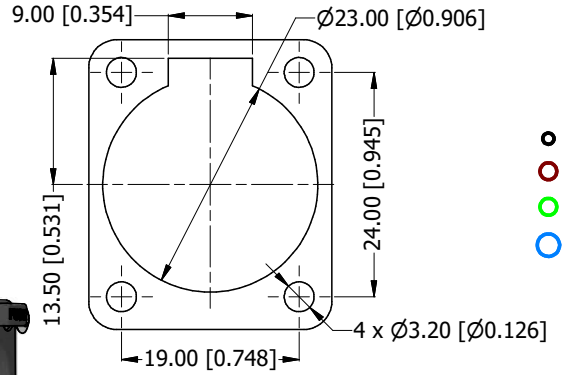

PANEL CUT OUT

PCB LAYOUT
(CONNECTOR TOP VIEW)

- RJ45 CONTACTS
- RJ45 SHELL GROUND CONTACT
- SHIELD BOX LEGS
- CONNECTOR LOCATION PINS

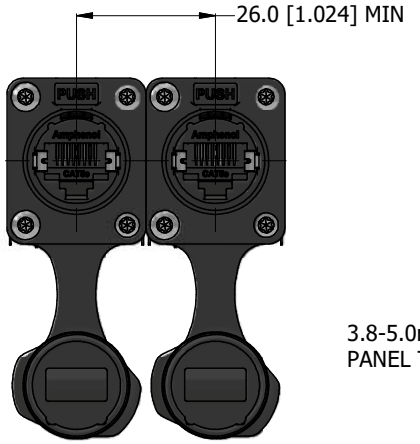

RECOMMEND MINIMUM MOUNTING PITCH

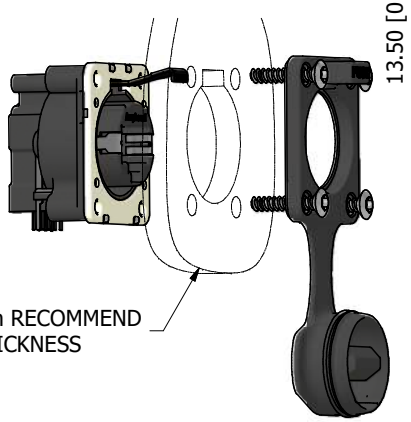

RJXS8FP25HP

- SERIES PREFIX
- CONTACT LAYOUT (RJ45 STYLE)
- GENDER
- THERMOPLASTIC 3.8mm to 5.0mm WITH CAP
- TRANSMISSION CLASS (CAT5e)
- HORIZONTAL MOUNT (PCB THRU HOLE)
- POTTED

Amphenol Australia RoHS Compliant Product

UNLESS OTHERWISE SPECIFIED TOLERANCE TO BE: LINEAR X ±10, X.X ±5, X.XX ±1; ANGULAR X° ±1, X°X' ±30', X°X'X" ±15'; BREAK ALL SHARP EDGES AND REMOVE ALL BURRS	THIS DOCUMENT IS THE PROPERTY OF AMPHENOL AUSTRALIA PTY. LTD. NO PART THEREOF MAY BE REPRODUCED AND USED WITHOUT THE PRIOR WRITTEN CONSENT OF THE OWNER			Amphenol	Amphenol Australia Pty.Ltd, 22 Industry Blvd Carrum Downs, VIC 3201
	MATERIAL: SEE COMPONENTS	DRN: J.W	DATE: 24/08/2023	TITLE: XLRnet PANEL MOUNT, HORZ, IP65, POTTED, WITH CAP, PANEL THICKNESS 3.8-5.0	PART No: RJXS8FP25HP / REV 1
		CKD: P.M.	DATE: 24/08/2023		
DO NOT SCALE	FINISH: SEE COMPONENTS	APP'D: P.M.	DATE: 24/08/2023		DRAWING No. 55011542-100-1 / SHEET 2/2
DIMENSIONS IN MILIMETRES	THIRD ANGLE PROJECTION	SCALE: NTS	SIZE: A3		

Downloaded from Arrow.com.