MICRO SWITCH
FREEPORT, ILLINOIS, U.S.A.
A DIVISION OF HONEYWELL

FED. MFG. CODE 91929

SWITCH-BASIC

CATALOG LISTING
BA-2RB-P4

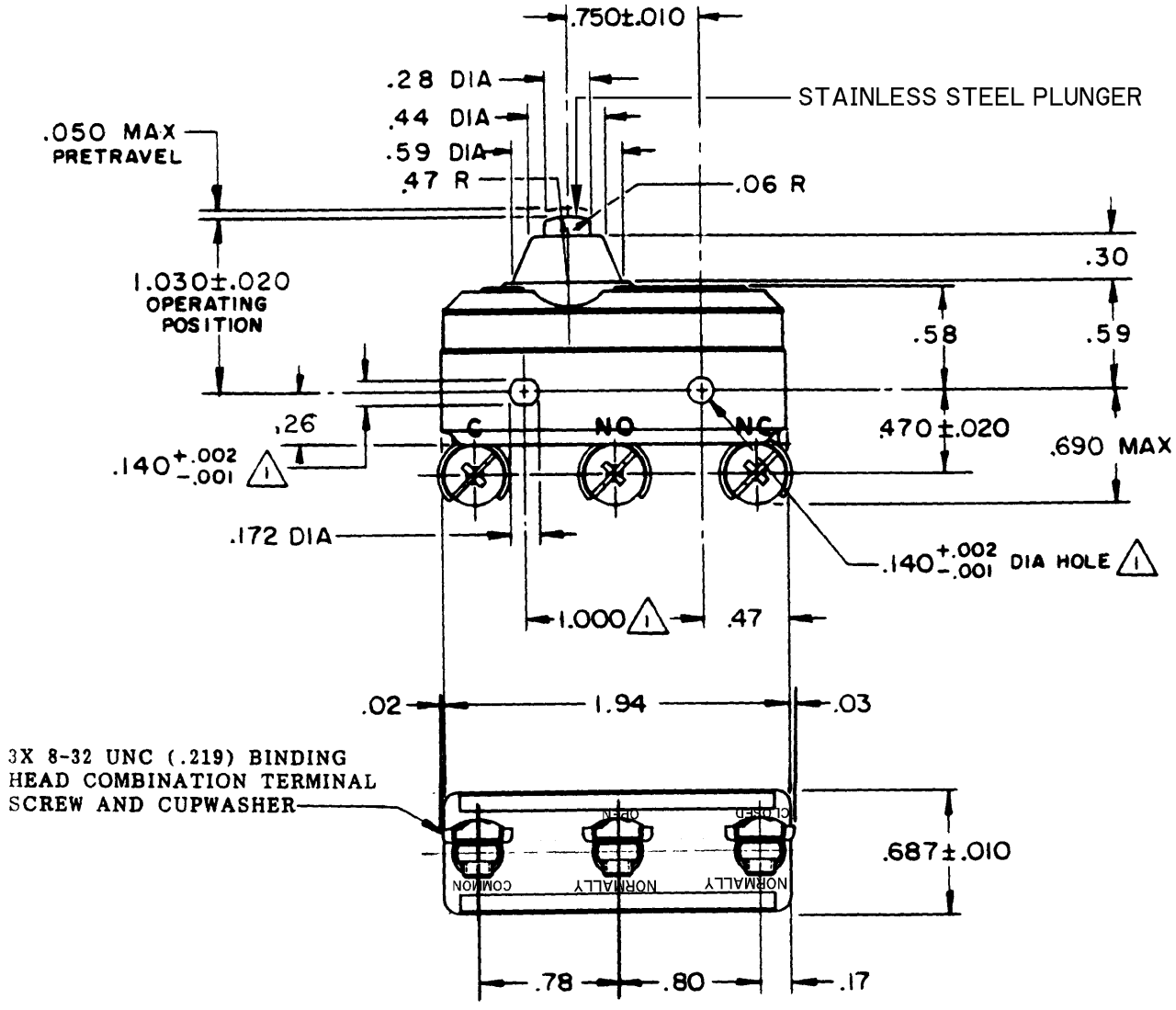

NOTE

1. MOUNTING HOLES WILL ACCEPT PINS OR SCREWS OF .139 MAX DIA ON 1.000 ±.002 CENTERS

THIS DRAWING COVERS A PROPRIETARY ITEM AND IS THE PROPERTY OF MICRO SWITCH, A DIVISION OF HONEYWELL. THIS DRAWING IS NOT TO BE COPIED OR USED WITHOUT THE APPROVAL OF MICRO SWITCH.

CHARACTERISTICS

OPERATING FORCE	14 - 22 OZ
RELEASE FORCE	10 OZ MIN
DIFFERENTIAL TRAVEL	.0020 - .0075
OVERTRAVEL	.094 MIN

ELECTRICAL DATA

CONTACT ARRANGEMENT
S P D T

L23 — UNDERWRITERS' LAB. INC. LISTED RATING
20A - 125, 250 OR 480 VAC
10A - 125 VAC "L"
1HP - 125 VAC, 2HP - 250 VAC
1/2A - 125 VDC, 1/4A - 250 VDC

L288
L299
L308

20(3)A 250V ~ T85 5E4

SCALE FULL

DO NOT SCALE PRINT

UNLESS OTHERWISE NOTED
DIMENSIONS ARE IN INCHES

TOLERANCES ARE:

ONE PLACE	(.0)	±.030
TWO PLACE	(.00)	±.015
THREE PLACE	(.000)	±.005
ANGLES		±

WEIGHT

CATALOG LISTING BA-2RB-P4 PAGE 1 OF 1

DRAWING NUMBER M

ISSUE 7

REPLACES

RELEASE NO.

CHECK

REVISIONS

A	CO 16851	MBF 21 DEC 64
B	CO-73267-G	JAL 20 OCT 93
C	CO-75367B	KDR 3 MAR 94
D	CO-77863	GJW 30 APR 96
E	C093346	DLT 24 AUG 98
F	CO-95750-B	CSL 31 MAR 00

CHECK

28 DEC 64

LSD

CHECK

21 DEC 64

DRAWN MBF

FORMTEK

Downloaded from Arrow.com.