We connect and protect

Static Handle Plastic in Trapezoid Form, Black, 4 HP

CATALOG NUMBER

20809-397

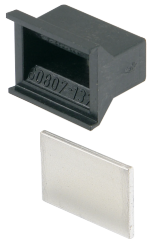

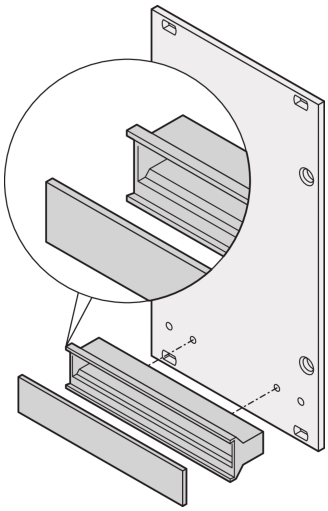

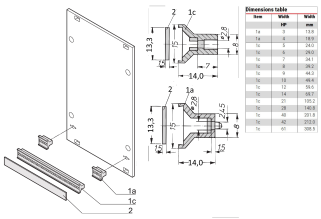

The static plastic handle, trapezoid form in black color can be mounted to a front panel for extraction of the PCB.

CERTIFICATIONS

RoHS COMPLIANT

FEATURES

With separate identification plate, Al 1.5 mm

Handle, PC, UL 94 V-0

PRODUCT ATTRIBUTES

Rack Width: 4HP

Package Quantity: 1

Handle Type: Trapezoid, Static

Flammability Rating: UL® 94V-0

Downloaded from Arrow.com.

Color: Black

Complies With: EN 45545-2, R22-R24, HL3; IEC 60297-3-101

Material: Polycarbonate

Product Type: Handle

Type: Static

Works With: Front Panels

ADDITIONAL PRODUCT DETAILS

Please take into consideration that deliveries may be carried out in the stated SPQs (SPQ, e.g. 5 pieces, 10 pieces, 50 pieces, etc.). Differing order quantities (e.g. 2 pieces) may be changed to the next possible delivery quantity = Standard Pack Quantity.

Cannot be used together with fixing clip (21101-239).

DIAGRAMS

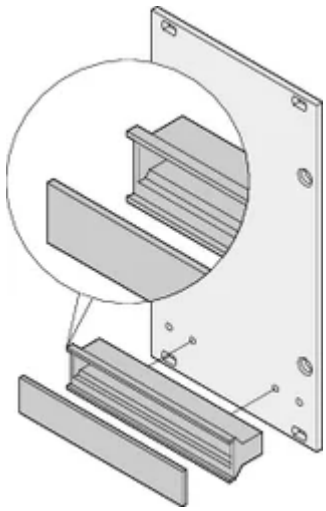

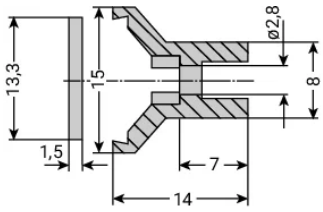

WARNING

nVent products shall be installed and used only as indicated in nVent's product instruction sheets and training materials. Instruction sheets are available at www.nvent.com and from your nVent customer service representative. Improper installation, misuse, misapplication or other failure to completely follow nVent's instructions and warnings may cause product malfunction, property damage, serious bodily injury and death and/or void your warranty.

Downloaded from Arrow.com.

North America
All locations
+1.763.422.2661
Chat with us:
nvent.com/schroff

Europe
Straubenhardt, Germany
+49.7082.794.0
Betschdorf, France
+33.3.88.90.64.90
Warsaw, Poland
+48.22.209.98.35
Assago, Italy
+39.02.932.7141
Chat with us:
nvent.com/schroff

Asia
Shanghai, China
+86.21.2412.6943
Qingdao, China
+86.532.8771.6101
Singapore
+65.6768.5800
Shin-Yokohama, Japan
+81.45.476.0271
Chat with us:
nvent.com/schroff

Middle East & India
Dubai, United Arab Emirates
+971.4.378.1700
Bangalore, India
+91.80.6715.2001
Istanbul, Turkey
+90.216.250.7374
Chat with us:
nvent.com/schroff

Our powerful portfolio of brands:

CADDY ERICO HOFFMAN ILSCO SCHROFF TRACHTE

©2026 nVent. All nVent marks and logos are owned or licensed by nVent Services GmbH or its affiliates. All other trademarks are the property of their respective owners. nVent reserves the right to change specifications without notice.

This document is system-generated.

Downloaded from Arrow.com.