used for: D-SUB

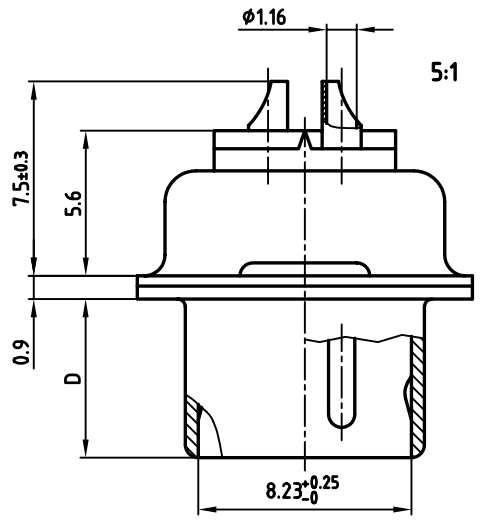

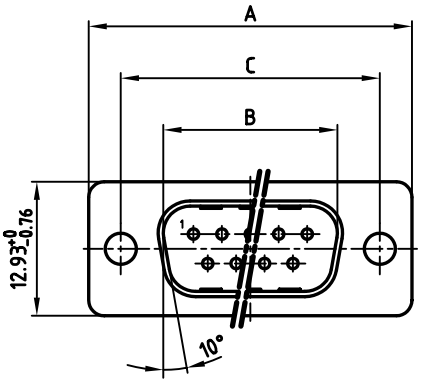

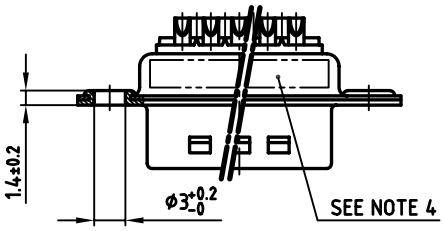

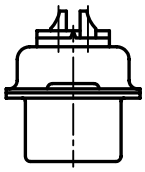

POS.	A -0.76	B +0.25	C	D -0.3	Part No.
9	31.19	16.79	25.00 +0.12 -0.13	6.12	**163C11069X**
15	39.52	25.12	33.30 +0.15 -0.1	6.12	**163C11079X**
25	53.42	38.84	47.04 ±0.13	5.99	**163C11089X**
37	69.70	55.30	63.50 ±0.13	5.99	**163C11099X**

Directive 2002/95/EC „RoHS" Compliant

NOTES:

1. METALSHELLS: STEEL; min. 320µ" TIN
2. INSULATORS: PBT GF UL 94 V-0, BLACK
3. CONTACTS: COPPER ALLOY
   PLATING: 30µ" HARD GOLD OVER min. 50µ" NICKEL
   SOLDER CUP ACCEPTS CABLE AWG 20
4. CONNECTOR IS PART MARKED: PART-NO. CONEC Y/WW

APPROVAL # FREIGABE # DEBLOCAGE # AUTOR/ZACION # APPROVAL

CUSTOMER APPROVAL DATE:

NAME: TITLE:

COMPANY NAME:

APPROVAL # FREIGABE # DEBLOCAGE # AUTOR/ZACION # APPROVAL

THIS DRAWING MAY NOT BE COPIED OR REPRODUCED IN ANY WAY, AND MAY NOT BE PASSED ON TO A THIRD PARTY WITHOUT WRITTEN PERMISSION. OWNERSHIP AND COPYRIGHT OF CONEC GmbH

DO NOT ALTER CAD DRAWING BY HAND

rev.	description	date	name

tolerance

2004	date	name
drawn	29.01.	Lehmenkühler
appd.	29.01.	Mickenbecker
norm	DIN 41652	
d-old		

CONEC®

scale: 2:1 (5:1)
material: SEE NOTES

title:
D-SUB MALE
9-37pos. SOLDER CUP

dwg no: 16K2A660
AutoCAD 2000
DIN-A 3
sh: 1/1

part no: SEE TABLE

Downloaded from Arrow.com.