List of products

■ G-TWIN Standard Series (IEC/EN/GB/JIS conformed)

Line protection

AC415V Icu	BW32	BW50	BW63	BW100	BW125	BW160	BW250	BW400	BW630	BW800
1.5kA	AAG	AAG		AAG						
2.5kA	SAG	EAG	EAG							
7.5kA		SAG	SAG							
10kA		RAG	RAG	EAG						
18kA						EAG	EAG			
30kA					JAG	JAG	JAG	EAG		
36kA					SAG	SAG	SAG	SAG	EAG	EAG
50kA					RAG	RAG	RAG	RAG	RAG	RAG
65kA		HAG*			HAG*		HAG*			
70kA								HAG	HAG	HAG

Note: * There are no performance indications for GB standards for the BW50HAG, BW125HAG, and BW250HAG.

Motor protection

AC415V Icu	BW32	BW50	BW63	BW100	BW125	BW250
1.5kA	AAM					
2.5kA	SAM	EAM	EAM			
7.5kA		SAM	SAM			
10kA		RAM		EAM		
18kA						EAM
30kA					JAM	JAM
50kA					RAM	RAM

■ G-TWIN Global Series (IEC/EN/GB/JIS/UL/CSA conformed)

Line protection

AC415V Icu	BW50	BW100	BW125	BW250	BW400	BW630	BW800
10kA	RAGU	EAGU					
18kA				EAGU			
30kA			JAGU	JAGU	EAGU		
36kA					SAGU		
50kA			RAGU	RAGU	RAGU	RAGU	RAGU
70kA					HAGU	HAGU	HAGU

■ BW0 Series (IEC/EN/GB conformed)

Line protection

AC415V Icu	100AF	160AF	250AF
15kA	BW103E0		
18kA		BW162E0 BW163E0	BW252E0 BW253E0
25kA		BW162J0 BW163J0	BW252J0 BW253J0
30kA	BW102S0 BW103S0		
36kA		BW162S0 BW163S0	BW252S0 BW253S0

■ S, H Series

Line protection

AC415V Icu	50AF	100AF	225AF	400AF	600AF	800AF	1000AF	1200AF	1600AF
65kA	H52BA H53BA	H102BA H103BA	H202BA H203BA				SA1003E SA1004E	SA1203E SA1204E	
85kA		H103R	H203R						SA1603E SA1604E
125kA				H403R	H603R	H803R			

■ H Series

Motor protection

AC415V Icu	50AF
65kA	H53BAM

■ F Series

Distribution Breakers

AC240V Icu	50AF	100AF
3kA	F51B F52B F53B	F102B F103B

06

Downloaded from Arrow.com.

■ Type number nomenclature

BW 250 EA G □ - 3P 225 X

Series
BW: G-TWIN series MCCB

Frame size

32: 32AF	63: 63AF	125: 125AF	250: 250AF	630: 630AF
50: 50AF	100: 100AF	160: 160AF	400: 400AF	800: 800AF

Breaking capacity

	Rated breaking capacity Icu (440V AC)									
	32AF	50AF	63AF	100AF	125AF	160AF	250AF	400AF	630AF	800AF
AA	1.5kA	1.5kA	–	1.5kA	–	–	–	–	–	–
EA	1.5kA	2.5kA	2.5kA	10kA	–	18kA	18kA	30kA	36kA	36kA
JA	–	–	–	–	30kA	30kA	30kA	–	–	–
SA	2.5kA	7.5kA	7.5kA	–	36kA	36kA	36kA	36kA	–	–
RA	–	10kA	10kA	–	50kA	50kA	50kA	50kA	50kA	50kA
HA	–	65kA	–	–	65kA	–	65kA	70kA	70kA	70kA

Model
G: Line protection M: Motor protection

G-TWIN series
Blank: Standard U: Global

No. of poles
2P: 2-pole 3P: 3-pole 4P: 4-pole

Rated current
See page 06/29.

Terminal combination (Global type)

Code	Terminal position Line	Terminal position Load	Applicable breaker type BW50	BW100, 125, 250	BW400, 630, 800
Blank	Screw	Screw	●	●	–
Blank	Flat teminal	Flat teminal	–	–	●
SB	Block terminal	Block terminal	–	●	●
SF	Flat teminal	Flat teminal	●	●	–
S3	Screw	Flat terminal	●	●	–
S4	Flat teminal	Screw	●	●	–
S5	Screw	Block terminal	–	●	–
S6	Block terminal	Screw	–	●	–
S7	Flat teminal	Block terminal	–	●	●
S8	Block terminal	Flat terminal	–	●	●

Mounting and connection
• Standard type
Blank: Front mounting front connection
X: Front mounting rear connection
E: Flush mounting rear connection
Y: Flush mounting , top & buttom connection
P: Plug-in mounting

Downloaded from Arrow.com.

W K F□ R□ A Q2 M□ UC

Enclosure
UC: Standard
UV: Dust-proof (IP40)
UW: Rain-proof (IP54)

With motor operating device (32 - 100AF)
□: DC100V
AC100-110V
AC200-220V

Pad locking device
Q2: Plate type

Connection method (internal accessories)
Blank: Lead-wire system
A: Terminal block system

Undervoltage trip device (External)*
• 32/50/63/100AF
□: DC24V
: DC100-110V
: AC100V (50Hz) / AC100-110V (60Hz)
: AC200V (50Hz) / AC200-220V (60Hz)
: AC400V (50Hz) / AC400-440V (60Hz)

Undervoltage trip device (Internal)*

• 125/160/250AF	• 400/630/800AF
□: DC24V	AC/DC24V
: DC48V	AC/DC48V
: DC100-110V	AC/DC100-110V
: DC125V	AC120-130V / DC125V
: AC100-110V	AC200-240V / DC200-220V
: AC110-130V	AC277V
: AC200-240V	AC380-480V
: AC277V	
: AC380-415V	
: AC440-480V	

Shunt trip device (Internal)*
• 32/50/63/100AF
□: AC/DC24V
: AC100-120V / DC100-110V
: AC200-240V
: AC380-450V

Shunt trip device (Internal)*

• 125/160/250AF	• 400/630/800AF
□: AC/DC24V	AC/DC24-48V
: AC/DC48V	AC100-240V / DC100-220V
: AC100-120V / DC100-110V	AC277V
: AC120-130V	AC380-550V
: AC200-240V / DC200-220V	
: AC277V	
: AC380-440V	
: AC440-480V	
: AC500-550V	

Alarm switch*
K: Standard SPDT
J: Standard 2PDT
8: For low level circuit SPDT
9: For low level circuit 2PDT

Auxiliary switch*
W: Standard SPDT
V: Standard 2PDT
1: For low level circuit SPDT
2: For low level circuit 2PDT

* For the available configuration of accessory, see page 06/68.

Downloaded from Arrow.com.

■ G-TWIN Standard Series

Ampere frame				32A			
Type				**BW32AAG**		**BW32SAG**	
Pole				2	3	2	3
Rated current Reference amb. temp. (40°C)		In(A)		3, 5, 10, 15, 20, 30, 32			
Rated impulse withstand voltage		Uimp(kV)		6		6	
Isolation compliant				●		●	
Rated insulation voltage Ui (V)		AC		500		690	
		DC		–		250*[1]	
Rated breaking capacity Icu/Ics (kA)	IEC 60947-2 EN 60947-2 JIS C 8201-2-1	AC	500V	–		1.5/1	
			440V	1.5/1		2.5/2	
			415V	1.5/1		2.5/2	
			400V	1.5/1		2.5/2	
			380V	1.5/1		2.5/2	
			240V	2.5/2		5/3	
			230V	2.5/2		5/3	
		DC	250V	–		2.5/2*[1]	
	GB14048.2	AC	400V	1.5/1		2.5/2	
			230V	2.5/2		5/3	
Conforming to standards	CE Marking			● (TÜV)		● (TÜV)	
	CCC certificate			●		●	
	Electrical Appliance and Material Safety Law <PS>E*[2]			●		●	
Dimensions (mm)			a	50	75	50	75
			b	100		100	
			c	60		60	
			d	84		84	
Mass (kg)				0.4	0.5	0.4	0.5
Tripping device				Hydraulic-magnetic			
Front mounting, front connection			No-mark	○	○	○	○
Front mounting, rear connection			X	○	○	○	○
Flush mounting, front connection			E	○	○	○	○
Flush mounting, top & bottom connection			Y	○	○	○	○
Plug-in mounting			P	○	○	○	○
IEC 35mm wide rail mounting			No-mark	○	○	○	○
Internal accessories			Page 06/63				
Alarm switch			K	○	○	○	○
Auxiliary switch			W	○	○	○	○
Undervoltage trip			R	○	○	○	○
Shunt trip			F	○	○	○	○
External accessories			Page 06/66				
Handle padlocking device	Cap type		QN	○	○	○	○
Handle padlocking device	Plate type		Q2	▲	▲	▲	▲
Operating handle	N-type		N	○	○	○	○
Operating handle	V-type		V	○	○	○	○
Terminal cover	Short		BT□S	○	○	○	○
Terminal cover	Long		BT□L	○	○	○	○
Insulation barrier	Interphase		BP	○	○	○	○
	Earth		BL	○	○	○	○
Handle locking cover			L1	○	○	○	○
Flat terminal			SS	○	○	○	○
Block terminal			SL	–	–	–	–

●: Approved ○: Available –: Not available ▲: Factory-mounted accessory
Note: *[1] Specify DC only when ordering circut breakers for DC circuit.
*[2] Electrical Appliance and Material Safety Law of Japan

Downloaded from Arrow.com.

■ G-TWIN Standard Series

Ampere frame				50A								
Type				**BW50AAG**		**BW50EAG**		**BW50SAG**		**BW50RAG**		**BW50HAG**
Pole				2	3	2	3	2	3	2	3	2	3
Rated current Reference amb. temp. (40°C)		In(A)		5, 10, 15, 20, 30, 32, 40, 50						10, 15, 20, 30, 32, 40, 50		15, 20, 30, 40, 50
Rated impulse withstand voltage		Uimp(kV)		6		6		6		6		6
Isolation compliant				●		●		●		●		●
Rated insulation voltage Ui (V)		AC		500		690		690		690		690
		DC		–		250*1		250*1		250*1		250
Rated breaking capacity Icu/Ics (kA)	IEC 60947-2 EN 60947-2 JIS C 8201-2-1	AC	500V	–		1.5/1		5/3		7.5/4		25/7
			440V	1.5/1		2.5/2		7.5/4		10/5		65/17
			415V	1.5/1		2.5/2		7.5/4		10/5		65/17
			400V	1.5/1		2.5/2		7.5/4		10/5		65/17
			380V	1.5/1		2.5/2		7.5/4		10/5		65/17
			240V	2.5/2		5/3		10/5		25/13		125/63
			230V	2.5/2		5/3		10/5		25/13		125/63
		DC	250V	–		2.5/2*1		5/3*1		5/3*1		40/20
	GB14048.2	AC	400V	1.5/1		2.5/2		7.5/4		10/5		–
			230V	2.5/2		5/3		10/5		25/13		–
Conforming to standards	CE Marking			● (TÜV)		● (TÜV)		● (TÜV)		● (TÜV)		●
	CCC certificate			●		●		●		●		–
	Electrical Appliance and Material Safety Law <PS>E*2			●		●		●		●		●
Dimensions (mm) 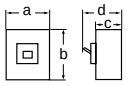			a	50	75	50	75	50	75	50	75	90
			b	100		100		100		100		155
			c	60		60		60		60		68
			d	84		84		84		84		95
Mass (kg)				0.4	0.5	0.4	0.5	0.4	0.5	0.4	0.5	1.0	1.2
Tripping device				Hydraulic-magnetic								Thermal-magnetic	
Front mounting, front connection			No-mark	○	○	○	○	○	○	○	○	○	○
Front mounting, rear connection			X	○	○	○	○	○	○	○	○	○	○
Flush mounting, front connection			E	○	○	○	○	○	○	○	○	○	○
Flush mounting, top & bottom connection			Y	○	○	○	○	○	○	○	○	–	–
Plug-in mounting			P	○	○	○	○	○	○	○	○	○	○
IEC 35mm wide rail mounting			No-mark	○	○	○	○	○	○	○	○	–	–
Internal accessories			Page 06/63										
Alarm switch			K	○	○	○	○	○	○	○	○	○	○
Auxiliary switch			W	○	○	○	○	○	○	○	○	○	○
Undervoltage trip			R	○	○	○	○	○	○	○	○	○	○
Shunt trip			F	○	○	○	○	○	○	○	○	○	○
External accessories			Page 06/66										
Handle padlocking device	Cap type		Q1/QN	○	○	○	○	○	○	○	○	○	○
Handle padlocking device	Plate type		Q2	▲	▲	▲	▲	▲	▲	▲	▲	○	○
Operating handle	N-type		N	○	○	○	○	○	○	○	○	○	○
Operating handle	V-type		V	○	○	○	○	○	○	○	○	○	○
Terminal cover	Short		BT□S	○	○	○	○	○	○	○	○	○	○
Terminal cover	Long		BT□L	○	○	○	○	○	○	○	○	○	○
Insulation barrier	Interphase		BP	○	○	○	○	○	○	○	○	○	○
	Earth		BL	○	○	○	○	○	○	○	○	–	–
Handle locking cover			L1	○	○	○	○	○	○	○	○	○	○
Flat terminal			SS	○	○	○	○	○	○	○	○	○	○
Block terminal			SL	–	–	–	–	–	–	–	–	○	○

●: Approved ○: Available –: Not available ▲: Factory-mounted accessory
Note: *1 Specify DC only when ordering circut breakers for DC circuit.
*2 Electrical Appliance and Material Safety Law of Japan

06

Downloaded from Arrow.com.

Molded Case Circuit Breakers
G-TWIN series
Quick reference guide

■ G-TWIN Standard Series

Ampere frame				63A				
Type				**BW63EAG**		**BW63SAG**		**BW63RAG**
Pole				2	3	2	3	2	3
Rated current Reference amb. temp. (40°C)		In(A)		60, 63				
Rated impulse withstand voltage		Uimp(kV)		6		6		6
Isolation compliant				●		●		●
Rated insulation voltage Ui (V)		AC		690		690		690
		DC		250*1		250*1		250*1
Rated breaking capacity Icu/Ics (kA)	IEC 60947-2 EN 60947-2 JIS C 8201-2-1	AC	500V	1.5/1		5/3		7.5/4
			440V	2.5/2		7.5/4		10/5
			415V	2.5/2		7.5/4		10/5
			400V	2.5/2		7.5/4		10/5
			380V	2.5/2		7.5/4		10/5
			240V	5/3		10/5		25/13
			230V	5/3		10/5		25/13
		DC	250V	2.5/2*1		5/3*1		5/3*1
	GB14048.2	AC	400V	2.5/2		7.5/4		10/5
			230V	5/3		10/5		25/13
Conforming to standards	CE Marking			● (TÜV)		● (TÜV)		● (TÜV)
	CCC certificate			●		●		●
	Electrical Appliance and Material Safety Law <PS>E*2			●		●		●
Dimensions (mm) 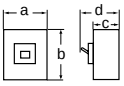			a	50	75	50	75	50	75
			b	100		100		100	
			c	60		60		60	
			d	84		84		84	
Mass (kg)				0.4	0.5	0.4	0.5	0.4	0.5
Tripping device				Hydraulic-magnetic					
Front mounting, front connection			No-mark	○	○	○	○	○	○
Front mounting, rear connection			X	○	○	○	○	○	○
Flush mounting, front connection			E	○	○	○	○	○	○
Flush mounting, top & bottom connection			Y	○	○	○	○	○	○
Plug-in mounting			P	○	○	○	○	○	○
IEC 35mm wide rail mounting			No-mark	○	○	○	○	○	○
Internal accessories			Page 06/63						
Alarm switch			K	○	○	○	○	○	○
Auxiliary switch			W	○	○	○	○	○	○
Undervoltage trip			R	○	○	○	○	○	○
Shunt trip			F	○	○	○	○	○	○
External accessories			Page 06/66						
Handle padlocking device	Cap type		QN	○	○	○	○	○	○
Handle padlocking device	Plate type		Q2	▲	▲	▲	▲	▲	▲
Operating handle	N-type		N	○	○	○	○	○	○
Operating handle	V-type		V	○	○	○	○	○	○
Terminal cover	Short		BT□S	○	○	○	○	○	○
Terminal cover	Long		BT□L	○	○	○	○	○	○
Insulation barrier	Interphase		BP	○	○	○	○	○	○
	Earth		BL	○	○	○	○	○	○
Handle locking cover			L1	○	○	○	○	○	○
Flat terminal			SS	○	○	○	○	○	○
Block terminal			SL	–	–	–	–	–	–

●: Approved ○: Available –: Not available ▲: Factory-mounted accessory

Note: *1 Specify DC only when ordering circut breakers for DC circuit.

*2 Electrical Appliance and Material Safety Law of Japan

Downloaded from Arrow.com.

■ G-TWIN Standard Series

Ampere frame				100A			
Type				**BW100AAG**		**BW100EAG**	
Pole				2	3	2	3
Rated current Reference amb. temp. (40°C)		In(A)		60, 63, 75, 100		50, 60, 63, 75, 100	
Rated impulse withstand voltage		Uimp(kV)		6		6	
Isolation compliant				●		●	
Rated insulation voltage Ui (V)		AC		500		690	
		DC		–		250*1	
Rated breaking capacity Icu/Ics (kA)	IEC 60947-2 EN 60947-2 JIS C 8201-2-1	AC	500V	–		7.5/4	
			440V	–		10/5	
			415V	–		10/5	
			400V	1.5/1		10/5	
			380V	1.5/1		10/5	
			240V	5/3		25/13	
			230V	5/3		25/13	
		DC	250V	–		5/3*1	
	GB14048.2	AC	400V	1.5/1		10/5	
			230V	5/3		25/13	
Conforming to standards	CE Marking			● (TÜV)		● (TÜV)	
	CCC certificate			●		●	
	Electrical Appliance and Material Safety Law <PS>E*2			●		●	
Dimensions (mm) 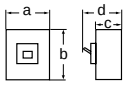			a	50	75	50	75
			b	100		100	
			c	60		60	
			d	84		84	
Mass (kg)				0.4	0.5	0.4	0.5
Tripping device				Thermal -magnetic			
Front mounting, front connection			No-mark	○	○	○	○
Front mounting, rear connection			X	○	○	○	○
Flush mounting, front connection			E	○	○	○	○
Flush mounting, top & bottom connection			Y	○	○	○	○
Plug-in mounting			P	○	○	○	○
IEC 35mm wide rail mounting			No-mark	○	○	○	○
Internal accessories			Page 06/63				
Alarm switch			K	○	○	○	○
Auxiliary switch			W	○	○	○	○
Undervoltage trip			R	○	○	○	○
Shunt trip			F	○	○	○	○
External accessories			Page 06/66				
Handle padlocking device	Cap type		QN	○	○	○	○
Handle padlocking device	Plate type		Q2	▲	▲	▲	▲
Operating handle	N-type		N	○	○	○	○
Operating handle	V-type		V	○	○	○	○
Terminal cover	Short		BT□S	○	○	○	○
Terminal cover	Long		BT□L	○	○	○	○
Insulation barrier	Interphase		BP	○	○	○	○
	Earth		BL	○	○	○	○
Handle locking cover			L1	○	○	○	○
Flat terminal			SS	○	○	○	○
Block terminal			SL	–	–	–	–

●: Approved ○: Available –: Not available ▲ : Factory-mounted accessory
Note: *1 Specify DC only when ordering circut breakers for DC circuit.
*2 Electrical Appliance and Material Safety Law of Japan

06

Downloaded from Arrow.com.

■ G-TWIN Standard Series

Ampere frame				125A									
Type				**BW125JAG**			**BW125SAG**			**BW125RAG**			**BW125HAG**
Pole				2	3	4	2	3	4	2	3	4	2	3
Rated current Reference amb. temp. (40°C)		In(A)		15, 20, 30, 40, 50, 60, 75, 100, 125										
Rated impulse withstand voltage		Uimp(kV)		6			6			6			6	
Isolation compliant				●			●			●			●	
Rated insulation voltage Ui (V)		AC		690			690			690			690	
		DC		250			250			250			250	
Rated breaking capacity Icu/Ics (kA)	IEC 60947-2 EN 60947-2 JIS C 8201-2-1	AC	690V	–	–		–			–			–	
			500V	5/3	8/4		10/5			10/5			25/7	
			440V	30/15	30/15		36/18			50/25			65/17	
			415V	30/15	30/15		36/18			50/25			65/17	
			400V	30/15	30/15		36/18			50/25			65/17	
			380V	30/15	30/15		36/18			50/25			65/17	
			240V	50/25	50/25		85/43			100/50			125/63	
			230V	50/25	50/25		85/43			100/50			125/63	
		DC	250V	15/8	15/8		30/15			40/20			40/20	
	GB14048.2	AC	400V	30/15	30/15		36/18			50/25			–	
			230V	50/25	50/25		85/43			100/50			–	
Conforming to standards	CE Marking			● (TÜV)			● (TÜV)			● (TÜV)			●	
	CCC certificate			●			●			●			–	
	Electrical Appliance and Material Safety Law <PS>E*2			● (except for 125A)			● (except for 125A)			● (except for 125A)			● (except for 125A)	
Dimensions (mm) 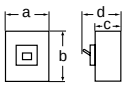			a	60	90	120	90	90	120	90	90	120	90	
			b	155			155			155			155	
			c	68			68			68			68	
			d	95			95			95			95	
Mass (kg)				0.8	1.2	1.6	1.0	1.2	1.6	1.0	1.2	1.6	1.0	1.2
Tripping device				Thermal-magnetic										
Front mounting, front connection			No-mark	○	○	○	○	○	○	○	○	○	○	○
Front mounting, rear connection			X	○	○	○	○	○	○	○	○	○	○	○
Flush mounting, front connection			E	○	○	○	○	○	○	○	○	○	○	○
Plug-in mounting			P	○	○	–	○	○	–	○	○	–	○	○
Internal accessories			Page 06/64											
Alarm switch			K	○	○	○	○	○	○	○	○	○	○	○
Auxiliary switch			W	○	○	○	○	○	○	○	○	○	○	○
Undervoltage trip			R	–	○	○	○	○	○	○	○	○	○	○
Shunt trip			F	○	○	○	○	○	○	○	○	○	○	○
External accessories			Page 06/66											
Handle padlocking device	Cap type		Q1	○	○	○	○	○	○	○	○	○	○	○
Handle padlocking device	Plate type		Q2	–	○	○	○	○	○	○	○	○	○	○
Operating handle	N-type		N	○	○	○	○	○	○	○	○	○	○	○
Operating handle	V-type		V	○	○	○	○	○	○	○	○	○	○	○
Terminal cover	Short		BT□S	○	○	○	○	○	○	○	○	○	○	○
Terminal cover	Long		BT□L	○	○	○	○	○	○	○	○	○	○	○
Insulation barrier	Interphase		BP	○	○	○	○	○	○	○	○	○	○	○
Handle locking cover			L1	○	○	○	○	○	○	○	○	○	○	○
Flat terminal			SS	○	○	○	○	○	○	○	○	○	○	○
Block terminal			SL	○	○	○	○	○	○	○	○	○	○	○

●: Approved ○: Available –: Not available
Note: * Electrical Appliance and Material Safety Law of Japan

Downloaded from Arrow.com.

■ G-TWIN Standard Series

Ampere frame				160A									
Type				**BW160EAG**		**BW160JAG**			**BW160SAG**			**BW160RAG**		
Pole				2	3	2	3	4	2	3	4	2	3	4
Rated current Reference amb. temp. (40°C)		In(A)		125, 150, 160										
Rated impulse withstand voltage		Uimp(kV)		6		6			6			6		
Isolation compliant				●		●			●			●		
Rated insulation voltage Ui (V)		AC		690		690			690			690		
		DC		250		250			250			250		
Rated breaking capacity Icu/Ics (kA)	IEC 60947-2 EN 60947-2 JIS C 8201-2-1	AC	690V	–		–			–			–		
			500V	5/3		8/4			10/5			10/5		
			440V	18/9		30/15			36/18			50/25		
			415V	18/9		30/15			36/18			50/25		
			400V	18/9		30/15			36/18			50/25		
			380V	18/9		30/15			36/18			50/25		
			240V	36/18		50/25			85/43			100/50		
			230V	36/18		50/25			85/43			100/50		
		DC	250V	10/5		20/10			30/15			30/15		
	GB14048.2	AC	400V	18/9		30/15			36/18			50/25		
			230V	36/18		50/25			85/43			100/50		
Conforming to standards	CE Marking			● (TÜV)		● (TÜV)			● (TÜV)			● (TÜV)		
	CCC certificate			●		●			●			●		
	Electrical Appliance and Material Safety Law <PS>E*			–		–			–			–		
Dimensions (mm)			a	105	105	105	105	140	105	105	140	105	105	140
			b	165		165			165			165		
			c	68		68			68			68		
			d	95		95			95			95		
Mass (kg)				1.4	1.6	1.4	1.6	2.2	1.4	1.6	2.2	1.4	1.6	2.2
Tripping device				Thermal-magnetic										
Front mounting, front connection			No-mark	○	○	○	○	○	○	○	○	○	○	○
Front mounting, rear connection			X	○	○	○	○	○	○	○	○	○	○	○
Flush mounting, front connection			E	○	○	○	○	○	○	○	○	○	○	○
Plug-in mounting			P	○	○	○	○	–	○	○	–	○	○	–
Internal accessories			Page 06/64											
Alarm switch			K	○	○	○	○	○	○	○	○	○	○	○
Auxiliary switch			W	○	○	○	○	○	○	○	○	○	○	○
Undervoltage trip			R	○	○	○	○	○	○	○	○	○	○	○
Shunt trip			F	○	○	○	○	○	○	○	○	○	○	○
External accessories			Page 06/66											
Handle padlocking device	Cap type		Q1	○	○	○	○	○	○	○	○	○	○	○
Handle padlocking device	Plate type		Q2	○	○	○	○	○	○	○	○	○	○	○
Operating handle	N-type		N	○	○	○	○	○	○	○	○	○	○	○
Operating handle	V-type		V	○	○	○	○	○	○	○	○	○	○	○
Terminal cover	Short		BT□S	○	○	○	○	○	○	○	○	○	○	○
Terminal cover	Long		BT□L	○	○	○	○	○	○	○	○	○	○	○
Insulation barrier	Interphase		BP	○	○	○	○	○	○	○	○	○	○	○
Handle locking cover			L1	○	○	○	○	○	○	○	○	○	○	○
Flat terminal			SS	○	○	○	○	○	○	○	○	○	○	○
Block terminal			SL	○	○	○	○	○	○	○	○	○	○	○

●: Approved ○: Available –: Not available
Note: * Electrical Appliance and Material Safety Law of Japan

Downloaded from Arrow.com.

Molded Case Circuit Breakers
G-TWIN series
Quick reference guide

■ G-TWIN Standard Series

Ampere frame				250A												
Type				**BW250EAG**		**BW250JAG**			**BW250SAG**			**BW250RAG**			**BW250HAG**	
Pole				2	3	2	3	4	2	3	4	2	3	4	2	3
Rated current Reference amb. temp. (40°C)		In(A)		175, 200, 225, 250											125,150,160,175 200,225,250	
Rated impulse withstand voltage		Uimp(kV)		6		6			6			6			6	
Isolation compliant				●		●			●			●			●	
Rated insulation voltage Ui (V)		AC		690		690			690			690			690	
		DC		250		250			250			250			250	
Rated breaking capacity Icu/Ics (kA)	IEC 60947-2 EN 60947-2 JIS C 8201-2-1	AC	690V	–		–			–			–			–	
			500V	5/3		8/4			10/5			10/5			25/7	
			440V	18/9		30/15			36/18			50/25			65/17	
			415V	18/9		30/15			36/18			50/25			65/17	
			400V	18/9		30/15			36/18			50/25			65/17	
			380V	18/9		30/15			36/18			50/25			65/17	
			240V	36/18		50/25			85/43			100/50			125/63	
			230V	36/18		50/25			85/43			100/50			125/63	
		DC	250V	10/5		20/10			30/15			30/15			40/20	
	GB14048.2	AC	400V	18/9		30/15			36/18			50/25			–	
			230V	36/18		50/25			85/43			100/50			–	
Conforming to standards	CE Marking			● (TÜV)		● (TÜV)			● (TÜV)			● (TÜV)			●	
	CCC certificate			●		●			●			●			–	
	Electrical Appliance and Material Safety Law <PS>E*			–		–			–			–			–	
Dimensions (mm)			a	105	105	105	105	140	105	105	140	105	105	140	105	
			b	165		165			165			165			165	
			c	68		68			68			68			68	
			d	95		95			95			95			95	
Mass (kg)				1.4	1.6	1.4	1.6	2.2	1.4	1.6	2.2	1.4	1.6	2.2	1.4	1.6
Tripping device				Thermal-magnetic												
Front mounting, front connection			No-mark	○	○	○	○	○	○	○	○	○	○	○	○	○
Front mounting, rear connection			X	○	○	○	○	○	○	○	○	○	○	○	○	○
Flush mounting, front connection			E	○	○	○	○	○	○	○	○	○	○	○	○	○
Plug-in mounting			P	○	○	○	○	–	○	○	–	○	○	–	○	○
Internal accessories			Page 06/64													
Alarm switch			K	○	○	○	○	○	○	○	○	○	○	○	○	○
Auxiliary switch			W	○	○	○	○	○	○	○	○	○	○	○	○	○
Undervoltage trip			R	○	○	○	○	○	○	○	○	○	○	○	○	○
Shunt trip			F	○	○	○	○	○	○	○	○	○	○	○	○	○
External accessories			Page 06/66													
Handle padlocking device	Cap type		Q1	○	○	○	○	○	○	○	○	○	○	○	○	○
Handle padlocking device	Plate type		Q2	○	○	○	○	○	○	○	○	○	○	○	○	○
Operating handle	N-type		N	○	○	○	○	○	○	○	○	○	○	○	○	○
Operating handle	V-type		V	○	○	○	○	○	○	○	○	○	○	○	○	○
Terminal cover	Short		BT□S	○	○	○	○	○	○	○	○	○	○	○	○	○
Terminal cover	Long		BT□L	○	○	○	○	○	○	○	○	○	○	○	○	○
Insulation barrier	Interphase		BP	○	○	○	○	○	○	○	○	○	○	○	○	○
Handle locking cover			L1	○	○	○	○	○	○	○	○	○	○	○	○	○
Flat terminal			SS	○	○	○	○	○	○	○	○	○	○	○	○	○
Block terminal			SL	○	○	○	○	○	○	○	○	○	○	○	○	○

●: Approved ○: Available –: Not available
Note: * Electrical Appliance and Material Safety Law of Japan

Downloaded from Arrow.com.

■ G-TWIN Standard Series

Ampere frame				400A								
Type				**BW400EAG**		**BW400SAG**		**BW400RAG**			**BW400HAG**		
Pole				2	3	2	3	2	3	4	2	3	4
Rated current Reference amb. temp. (40°C)		In(A)		250, 300, 350, 400									
Rated impulse withstand voltage		Uimp(kV)		8		8		8			8		
Isolation compliant				●		●		●			●		
Rated insulation voltage Ui (V)		AC		690		690		690			690		
		DC		250		250		250			250		
Rated breaking capacity Icu/Ics (kA)	IEC 60947-2 EN 60947-2 JIS C 8201-2-1	AC	690V	–		10/5		15/8			15/8		
			500V	18/9		20/10		36/18			42/21		
			440V	30/15		36/18		50/25			70/35		
			415V	30/15		36/18		50/25			70/35		
			400V	30/15		36/18		50/25			70/35		
			380V	30/15		36/18		50/25			70/35		
			240V	50/25		85/43		100/50			125/63		
			230V	50/25		85/43		100/50			125/63		
		DC	250V	20/10		20/10		40/20			40/20		
	GB14048.2	AC	400V	30/15		36/18		50/25			70/35		
			230V	50/25		85/43		100/50			125/63		
Conforming to standards	CE Marking			● (TÜV)		● (TÜV)		● (TÜV)			● (TÜV)		
	CCC certificate			●		●		●			●		
	Electrical Appliance and Material Safety Law <PS>E*1			–		–		–			–		
Dimensions (mm)			a	140	140	140	140	140	140	185	140	140	185
			b	257		257		257			257		
			c	103		103		103			103		
			d	146		146		146			146		
Mass (kg)				4.6	5.6	4.6	5.6	4.6	5.6	7.4	4.6	5.6	7.4
Tripping device				Thermal-magnetic									
Front mounting, front connection			No-mark	○	○	○	○	○	○	○	○	○	○
Front mounting, rear connection			X	○	○	○	○	○	○	○	○	○	○
Flush mounting, front connection			E	○	○	○	○	○	○	○	○	○	○
Plug-in mounting			P	○	○	○	○	○	○	–	○	○	–
Internal accessories			Page 06/65										
Alarm switch			K	○	○	○	○	○	○	○	○	○	○
Auxiliary switch			W	○	○	○	○	○	○	○	○	○	○
Undervoltage trip			R	○	○	○	○	○	○	○	○	○	○
Shunt trip			F	○	○	○	○	○	○	○	○	○	○
External accessories			Page 06/66										
Handle padlocking device	Cap type		QN	○	○	○	○	○	○	○	○	○	○
Handle padlocking device	Plate type		Q2	○	○	○	○	○	○	○	○	○	○
Operating handle	N-type		N	○	○	○	○	○	○	○	○	○	○
Operating handle	V-type		V	○	○	○	○	○	○	○	○	○	○
Terminal cover	Short		BT□S	○	○	○	○	○	○	○	○	○	○
Terminal cover	Long		BT□L	○	○	○	○	○	○	○	○	○	○
Insulation barrier	Interphase		BP	○	○	○	○	○	○	○	○	○	○
Handle locking cover			L1	○	○	○	○	○	○	○	○	○	○
Flat terminal			SS	○*2	○*2	○*2	○*2	○*2	○*2	○*2	○*2	○*2	○*2
Block terminal			SL	○	○	○	○	○	○	○	○	○	○

●: Approved ○: Available –: Not available
Note: *1 Electrical Appliance and Material Safety Law of Japan
*2 Standard provided

06

Downloaded from Arrow.com.

■ G-TWIN Standard Series

Ampere frame				630A					800A				
Type				**BW630EAG**	**BW630RAG**		**BW630HAG**		**BW800EAG**	**BW800RAG**		**BW800HAG**	
Pole				3	3	4	3	4	3	3	4	3	4
Rated current Reference amb. temp. (40°C)		In(A)		500, 600, 630					700, 800				
Rated impulse withstand voltage		Uimp(kV)		8	8		8		8	8		8	
Isolation compliant				●	●		●		●	●		●	
Rated insulation voltage Ui (V)		AC		690	690		690		690	690		690	
		DC		250	250		250		250	250		250	
Rated breaking capacity Icu/Ics (kA)	IEC 60947-2 EN 60947-2 JIS C 8201-2-1	AC	690V	–	15/8		15/8		–	15/8		15/8	
			600V	–	–		–		–	–		–	
			500V	18/9	36/18		42/21		18/9	36/18		42/21	
			440V	36/18	50/25		70/35		36/18	50/25		70/35	
			415V	36/18	50/25		70/35		36/18	50/25		70/35	
			400V	36/18	50/25		70/35		36/18	50/25		70/35	
			380V	36/18	50/25		70/35		36/18	50/25		70/35	
			240V	50/25	100/50		125/63		50/25	100/50		125/63	
			230V	50/25	100/50		125/63		50/25	100/50		125/63	
		DC	250V	20/10	40/20		40/20		20/10	40/20		40/20	
	GB14048.2	AC	400V	36/18	50/25		70/35		36/18	50/25		70/35	
			230V	50/25	100/50		125/63		50/25	100/50		125/63	
Conforming to standards	CE Marking			● (TÜV)	● (TÜV)		● (TÜV)		● (TÜV)	● (TÜV)		● (TÜV)	
	CCC certificate			●	●		●		●	●		●	
	Electrical Appliance and Material Safety Law <PS>E*1			–	–		–		–	–		–	
Dimensions (mm)	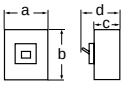		a	210	210	280	210	280	210	210	280	210	280
			b	275	275		275		275	275		275	
			c	103	103		103		103	103		103	
			d	146	146		146		146	146		146	
Mass (kg)				7.8	7.8	10.3	7.8	10.3	8.3	8.3	11	8.3	11
Tripping device				Thermal-magnetic									
Front mounting, front connection			No-mark	○	○	○	○	○	○	○	○	○	○
Front mounting, rear connection			X	○	○	○	○	○	○	○	○	○	○
Flush mounting, front connection			E	○	○	○	○	○	○	○	○	○	○
Plug-in mounting			P	○	○	–	○	–	○	○	–	○	–
Internal accessories			Page 06/65										
Alarm switch			K	○	○		○		○	○		○	
Auxiliary switch			W	○	○		○		○	○		○	
Undervoltage trip			R	○	○		○		○	○		○	
Shunt trip			F	○	○		○		○	○		○	
External accessories			Page 06/66										
Handle padlocking device	Cap type		QN	○	○		○		○	○		○	
Handle padlocking device	Plate type		Q2	○	○		○		○	○		○	
Operating handle	N-type		N	○	○		○		○	○		○	
Operating handle	V-type		V	○	○		○		○	○		○	
Terminal cover	Long		BT□L	○	○		○		○	○		○	
Insulation barrier	Interphase		BP	○	○		○		○	○		○	
Handle locking cover			L1	○	○		○		○	○		○	
Flat terminal			SS	○*2	○*2		○*2		○*2	○*2		○*2	
Block terminal			SL	○	○		○		○	○		○	

●: Approved ○: Available –: Not available
Note: *1 Electrical Appliance and Material Safety Law of Japan
*2 Standard provided

Downloaded from Arrow.com.

■ G-TWIN Global Series

Ampere frame				50A				100A	
Type				**BW50RAGU**				**BW100EAGU**	
Pole				2		3		2	3
Rated current Reference amb. temp. (40°C)		In(A)		3, 5	10, 15, 20, 30, 32, 40, 50	3, 5	10, 15, 20, 30, 32, 40, 50	60, 63, 70, 75, 80, 90, 100	
Rated impulse withstand voltage		Uimp(kV)		6				6	
Isolation compliant				●				●	
Rated insulation voltage Ui (V)		AC		690				690	
Rated breaking capacity	IEC 60947-2 EN 60947-2 JIS C 8201-2-1 Icu/Ics (kA)	AC	500V	7.5/4				7.5/4	
			440V	10/5				10/5	
			415V	10/5				10/5	
			400V	10/5				10/5	
			380V	10/5				10/5	
			240V	25/13				25/13	
			230V	25/13				25/13	
	GB14048.2 Icu/Ics(kA)	AC	400V	7/4	10/5	7/4	10/5	10/5	
			230V	14/7	25/13	14/7	25/13	25/13	
	UL489 CAN/CSA C22.2 NO.5 (kA)	AC	240V	14		–		14	
Conforming to standards	CE Marking			● (TÜV)				● (TÜV)	
	CCC certificate			●				●	
	UL Listed (NEMA AB1)			●				●	
	Electrical Appliance and Material Safety Law <PS>E*1			●				●	
Dimensions (inch(mm)) 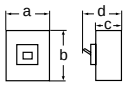			a	1.969 (50)		2.953 (75)		1.969 (50)	2.953 (75)
			b	4.724 (120)				4.724 (120)	
			c	2.362 (60)				2.362 (60)	
			d	3.307 (84)				3.307 (84)	
Mass (kg)				0.5		0.6		0.5	0.6
Tripping device				Hydraulic-magnetic					
Connecting terminal			Page 06/26						
Screw			S□	○		○		○	○
Flat				○		○		○	○
Block				–		–		○	○
Internal accessories			Page 06/63						
Alarm switch			K	○		○		○	○
Auxiliary switch			W	○		○		○	○
Undervoltage trip			R	○		○		○	○
Shunt trip			F	○		○		○	○
External accessories			Page 06/66						
Handle padlocking device Cap type			QN	○		○		○	○
Operating handle N-type			N	○		○		○	○
Operating handle V-type			V	○		○		○	○
Terminal cover Short			BT□S	○*2		○		○	○
Terminal cover Long			BT□L	○		○		○	○
Insulation barrier Interphase			BP	○		○		○	○
Handle locking cover			L1	○		○		○	○

●: Approved ○: Available –: Not available
Note: *1 Electrical Appliance and Material Safety Law of Japan
*2 Standard provided

06

Downloaded from Arrow.com.

■ G-TWIN Global Series

Ampere frame				125A			
Type				**BW125JAGU**		**BW125RAGU**	
Pole				2	3	2	3
Rated current Reference amb. temp. (40°C)		In(A)		15, 20, 30, 40, 50, 60, 70, 75, 80, 90, 100, 125			
Rated impulse withstand voltage		Uimp(kV)		6		6	
Isolation compliant				●		●	
Rated insulation voltage Ui (V)		AC		690		690	
		DC		250		250	
Rated breaking capacity	IEC 60947-2 EN 60947-2 JIS C 8201-2-1 Icu/Ics (kA)	AC	690V	–		5/3	
			500V	15/8		36/18	
			440V	30/15		50/25	
			415V	30/15		50/25	
			400V	30/15		50/25	
			380V	30/15		50/25	
			240V	50/25		100/50	
			230V	50/25		100/50	
		DC	250V	15/8		40/20	
	GB14048.2 Icu/Ics(kA)	AC	400V	30/15		50/25	
			230V	50/25		100/50	
	UL489 CAN/CSA C22.2 NO.5 (kA)	AC	600V/Y	10	10	18	
			480V/Δ	–	30	50	
			480V/Y	30	30	50	
			240V	50	50	100	
		DC	125/250V	10	10	10	
Conforming to standards	CE Marking			● (TÜV)		● (TÜV)	
	CCC certificate			●		●	
	UL Listed (NEMA AB1)			●		●	
	Electrical Appliance and Material Safety Law <PS>E*			● (except for 125A)		● (except for 125A)	
Dimensions (inch(mm)) 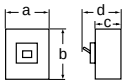			a	2.362 (60)	3.543 (90)	3.543 (90)	
			b	6.732 (171)		6.732 (171)	
			c	2.677 (68)		2.677 (68)	
			d	3.740 (95)		3.740 (95)	
Mass (kg)				0.8	1.2	1.0	1.2
Tripping device				Thermal-magnetic			
Connecting terminal			Page 06/26				
Screw			S□	○	○	○	○
Flat				○	○	○	○
Block				○	○	○	○
Internal accessories			Page 06/64				
Alarm switch			K	○	○	○	○
Auxiliary switch			W	○	○	○	○
Undervoltage trip			R	–	○	○	○
Shunt trip			F	○	○	○	○
External accessories			Page 06/66				
Handle padlocking device	Cap type		Q1	○	○	○	○
Handle padlocking device	Plate type		Q2	○	○	○	○
Operating handle	N-type		N	–	○	○	○
Operating handle	V-type		V	–	○	○	○
Operating handle	F-type		F	–	○	○	○
Terminal cover	Short		BT□S	○	○	○	○
Terminal cover	Long		BT□L	○	○	○	○
Insulation barrier	Interphase		BP	○	○	○	○
Handle locking cover			L1	○	○	○	○

●: Approved ○: Available –: Not available
Note: * Electrical Appliance and Material Safety Law of Japan

Downloaded from Arrow.com.

■ G-TWIN Global Series

Ampere frame				250A					
Type				**BW250EAGU**		**BW250JAGU**		**BW250RAGU**	
Pole				2	3	2	3	2	3
Rated current Reference amb. temp. (40°C)		In(A)		125, 150, 160, 175, 200, 225, 250					
Rated impulse withstand voltage		Uimp(kV)		6		6		6	
Isolation compliant				●		●		●	
Rated insulation voltage Ui (V)		AC		690		690		690	
		DC		250		250		250	
Rated breaking capacity	IEC 60947-2 EN 60947-2 JIS C 8201-2-1 Icu/Ics (kA)	AC	690V	–		–		5/3	
			500V	10/5		18/9		36/18	
			440V	18/9		30/15		50/25	
			415V	18/9		30/15		50/25	
			400V	18/9		30/15		50/25	
			380V	18/9		30/15		50/25	
			240V	36/18		50/25		100/50	
			230V	36/18		50/25		100/50	
		DC	250V	10/5		20/10		40/20	
	GB14048.2 Icu/Ics(kA)	AC	400V	18/9		30/15		50/25	
			230V	36/18		50/25		100/50	
	UL489 CAN/CSA C22.2 NO.5 (kA)	AC	600V/Y	–		10		25	
			480V/Δ	–		30		50	
			480V/Y	–		30		50	
			240V	22		50		100	
		DC	125/250V	10		10		10	
Conforming to standards	CE Marking			● (TÜV)		● (TÜV)		● (TÜV)	
	CCC certificate			●		●		●	
	UL Listed (NEMA AB1)			●		●		●	
	Electrical Appliance and Material Safety Law <PS>E*			–		–		–	
Dimensions (inch(mm)) 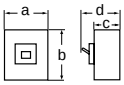			a	4.134 (105)		4.134 (105)		4.134 (105)	
			b	7.126 (181)		7.126 (181)		7.126 (181)	
			c	2.677 (68)		2.677 (68)		2.677 (68)	
			d	3.740 (95)		3.740 (95)		3.740 (95)	
Mass (kg)				1.4	1.6	1.4	1.6	1.4	1.6
Tripping device				Thermal-magnetic					
Connecting terminal			Page 06/26						
Screw			S□	○	○	○	○	○	○
Flat				○	○	○	○	○	○
Block				○	○	○	○	○	○
Internal accessories			Page 06/64						
Alarm switch			K	○	○	○	○	○	○
Auxiliary switch			W	○	○	○	○	○	○
Undervoltage trip			R	○	○	○	○	○	○
Shunt trip			F	○	○	○	○	○	○
External accessories			Page 06/66						
Handle padlocking device	Cap type		Q1	○	○	○	○	○	○
Handle padlocking device	Plate type		Q2	○	○	○	○	○	○
Operating handle	N-type		N	○	○	○	○	○	○
Operating handle	V-type		V	○	○	○	○	○	○
Operating handle	F-type		F	○	○	○	○	○	○
Terminal cover	Short		BT□S	○	○	○	○	○	○
Terminal cover	Long		BT□L	○	○	○	○	○	○
Insulation barrier	Interphase		BP	○	○	○	○	○	○
Handle locking cover			L1	○	○	○	○	○	○

●: Approved ○: Available –: Not available
Note: * Electrical Appliance and Material Safety Law of Japan

Downloaded from Arrow.com.

Molded Case Circuit Breakers
G-TWIN series
Quick reference guide

■ G-TWIN Global Series

Ampere frame				400A						
Type				**BW400EAGU**		**BW400SAGU**		**BW400RAGU**		**BW400HAGU**
Pole				2	3	2	3	2	3	2	3
Rated current Reference amb. temp. (40°C)		In(A)		250, 300, 350, 400						
Rated impulse withstand voltage		Uimp(kV)		8		8		8		8
Isolation compliant				●		●		●		●
Rated insulation voltage Ui (V)		AC		690		690		690		690
		DC		250		250		250		250
Rated breaking capacity	IEC 60947-2 EN 60947-2 JIS C 8201-2-1 Icu/Ics (kA)	AC	690V	–		10/5		15/8		15/8
			500V	18/9		20/10		36/18		42/21
			440V	30/15		36/18		50/25		70/35
			415V	30/15		36/18		50/25		70/35
			400V	30/15		36/18		50/25		70/35
			380V	30/15		36/18		50/25		70/35
			240V	50/25		85/43		100/50		125/63
			230V	50/25		85/43		100/50		125/63
		DC	250V	20/10		20/10		40/20		40/20
	GB14048.2 Icu/Ics(kA)	AC	400V	30/15		36/18		50/25		70/35
			230V	50/25		85/43		100/50		125/63
	UL489 CAN/CSA C22.2 NO.5 (kA)	AC	600V/Δ	–		–		–		25
			600V/Y	–		–		–		25
			480V/Δ	–		35		50		65 (With block terminal:50)
			480V/Y	–		35		50		65 (With block terminal:50)
			240V	22		50		100		125
		DC	125/250V	10		10		10		10
Conforming to standards	CE Marking			● (TÜV)		● (TÜV)		● (TÜV)		● (TÜV)
	CCC certificate			●		●		●		●
	UL Listed (NEMA AB1)			●		●		●		●
	Electrical Appliance and Material Safety Law <PS>E*			–		–		–		–
Dimensions (inch(mm))	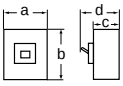		a	5.512 (140)		5.512 (140)		5.512 (140)		5.512 (140)
			b	10.12 (257)		10.12 (257)		10.12 (257)		10.12 (257)
			c	4.055 (103)		4.055 (103)		4.055 (103)		4.055 (103)
			d	5.748 (146)		5.748 (146)		5.748 (146)		5.748 (146)
Mass (kg)				4.6	5.6	4.6	5.6	4.6	5.6	4.6	5.6
Tripping device				Thermal-magnetic						
Connecting terminal		Page 06/26								
Flat				○	○	○	○	○	○	○	○
Block				○	○	○	○	○	○	○	○
Internal accessories		Page 06/65								
Alarm switch		K		○	○	○	○	○	○	○	○
Auxiliary switch		W		○	○	○	○	○	○	○	○
Undervoltage trip		R		○	○	○	○	○	○	○	○
Shunt trip		F		○	○	○	○	○	○	○	○
External accessories		Page 06/66								
Handle padlocking device	Cap type	QN		○	○	○	○	○	○	○	○
Handle padlocking device	Plate type	Q2		○	○	○	○	○	○	○	○
Operating handle	N-type	N		○	○	○	○	○	○	○	○
Operating handle	V-type	V		○	○	○	○	○	○	○	○
Operating handle	F-type	F		○	○	○	○	○	○	○	○
Terminal cover	Short	BT□S		○	○	○	○	○	○	○	○
Terminal cover	Long	BT□L		○	○	○	○	○	○	○	○
Insulation barrier	Interphase	BP		○	○	○	○	○	○	○	○
Handle locking cover		L1		○	○	○	○	○	○	○	○

●: Approved ○: Available –: Not available
Note: * Electrical Appliance and Material Safety Law of Japan

Downloaded from Arrow.com.

■ G-TWIN Global Series

Ampere frame				630A		800A	
Type				**BW630RAGU**	**BW630HAGU**	**BW800RAGU**	**BW800HAGU**
Pole				3	3	3	3
Rated current Reference amb. temp. (40°C)		In(A)		500, 600, 630*1		700, 800*2	
Rated impulse withstand voltage		Uimp(kV)		8	8	8	8
Isolation compliant				●	●	●	●
Rated insulation voltage Ui (V)		AC		690	690	690	690
		DC		250	250	250	250
Rated breaking capacity	IEC 60947-2 EN 60947-2 JIS C 8201-2-1 Icu/Ics (kA)	AC	690V	15/8	15/8	15/8	15/8
			500V	36/18	42/21	36/18	42/21
			440V	50/25	70/35	50/25	70/35
			415V	50/25	70/35	50/25	70/35
			400V	50/25	70/35	50/25	70/35
			380V	50/25	70/35	50/25	70/35
			240V	100/50	125/63	100/50	125/63
			230V	100/50	125/63	100/50	125/63
		DC	250V	40/20	40/20	40/20	40/20
	GB14048.2 Icu/Ics(kA)	AC	400V	50/25	70/35	50/25	70/35
			230V	100/50	125/63	100/50	125/63
	UL489 CAN/CSA C22.2 NO.5 (kA)	AC	600V/Δ	–	25	–	25
			600V/Y	–	25	–	25
			480V/Δ	50	65 (With block terminal:50)	50	65 (With block terminal:50)
			480V/Y	–	65 (With block terminal:50)	50	65 (With block terminal:50)
			240V	100	125	100	125
		DC	125/250V	10	10	10	10
Conforming to standards	CE Marking			● (TÜV)	● (TÜV)	● (TÜV)	● (TÜV)
	CCC certificate			●	●	●	●
	UL Listed (NEMA AB1)			●	●	●	●
	Electrical Appliance and Material Safety Law <PS>E*3			–	–	–	–
Dimensions (inch(mm))	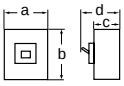		a	8.268 (210)	8.268 (210)	8.268 (210)	8.268 (210)
			b	10.83 (275)	10.83 (275)	10.83 (275)	10.83 (275)
			c	4.055 (103)	4.055 (103)	4.055 (103)	4.055 (103)
			d	5.748 (146)	5.748 (146)	5.748 (146)	5.748 (146)
Mass (kg)				8.9	8.9	9.4	9.4
Tripping device				Thermal-magnetic			
Connecting terminal			Page 06/26				
Flat				○	○	○	○
Block				○	○	○	○
Internal accessories			Page 06/65				
Alarm switch			K	○	○	○	○
Auxiliary switch			W	○	○	○	○
Undervoltage trip			R	○	○	○	○
Shunt trip			F	○	○	○	○
External accessories			Page 06/66				
Handle padlocking device	Cap type		QN	○	○	○	○
Handle padlocking device	Plate type		Q2	○	○	○	○
Operating handle	N-type		N	○	○	○	○
Operating handle	V-type		V	○	○	○	○
Terminal cover			BT□L	○	○	○	○
Insulation barrier	Interphase		BP	○	○	○	○
Handle locking cover			L1	○	○	○	○

●: Approved ○: Available –: Not available

Note: *1 Breakers for 630A cannot be manufactured with block terminals.
*2 Block terminals are standard for Breakers for 800A.
*3 Electrical Appliance and Material Safety Law of Japan

06

Downloaded from Arrow.com.

Motor protection breakers

Motors are normally controlled by MCCBs and magnetic starters. In this case the MCCB carries out overcurrent or short-circuit current protection while the starter deals with ON-OFF switching of the motor and offers protection against sustained overload currents. These are the motor breakers which combine the two functions.
FUJI motor breakers are designed to eliminate erroneous operations due to the rush current produced at the time of starting the motor. They will trip in the face of sustained overcurrent when the integrated bimetal relay has operated.

■ G-TWIN Standard Series / Motor protection

Ampere frame				32A		
Type				**BW32AAM**	**BW32SAM**	
Pole				3	2	3
Rated current Reference amb. temp. (40°C)		In(A)		1.4, 2.6, 4, 8, 10, 16, 24, 32	(2), (4), 5, 8, 10, 16	0.7, 1.4, 2, 2.6, 4, 5, 8, 10, 12, 16, 24, 32
Rated impulse withstand voltage		Uimp(kV)		6	6	6
Isolation compliant				●	●	●
Rated insulation voltage Ui (V)		AC		500	690	690
Rated breaking capacity Icu/Ics (kA)	IEC 60947-2 EN 60947-2 JIS C 8201-2-1	AC	690V	–	–	–
			500V	–	1.5/1	1.5/1
			440V	1.5/1	2.5/2	2.5/2
			415V	1.5/1	2.5/2	2.5/2
			400V	1.5/1	2.5/2	2.5/2
			380V	1.5/1	2.5/2	2.5/2
			240V	2.5/2	5/3	5/3
			230V	2.5/2	5/3	5/3
	GB14048.2	AC	400V	1.5/1	2.5/2	2.5/2
			230V	2.5/2	5/3	5/3
Conforming to standards	CE Marking			●	●	●
	CCC certificate			●	●	●
	Electrical Appliance and Material Safety Law <PS>E*2			●	●	●
Dimensions (mm) 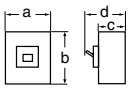			a	75	50	75
			b	100	100	100
			c	60	60	60
			d	84	84	84
Mass (kg)				0.5	0.4	0.5
Tripping device				Hydraulic-magnetic	Hydraulic-magnetic	Hydraulic-magnetic
Front mounting, front connection			No-mark	○	○	○
Front mounting, rear connection			X	○	○	○
Flush mounting, front connection			E	○	○	○
Flush mounting, top & buttom connection			Y	○	○	○
Plug-in mounting			P	○	○	○
IEC 35mm wide rail mounting				○	○	○
Internal accessories			Page 06/63			
Alarm switch			K	○	○	○
Auxiliary switch			W	○	○	○
Undervoltage trip			R	○	○	○
Shunt trip			F	○	○	○
External accessories			Page 06/66			
Handle padlocking device	Cap type		QN	○	○	○
Handle padlocking device	Plate type		Q2	▲	▲	▲
Operating handle	N-type		N	○	○	○
Operating handle	V-type		V	○	○	○
Terminal cover	Short		BT□S	○	○	○
Terminal cover	Long		BT□L	○	○	○
Insulation barrier	Interphase		BP	○	○	○
Insulation barrier	Earth		BL	○	○	○
Handle locking cover			L1	○	○	○
Flat terminal			SS	○	○	○
Block terminal			SL	–	–	–

●: Approved ○: Available –: Not available ▲ : Factory-mounted accessory
Note: *1 Specify DC only when ordering circuit breakers for DC circuit.
*2 Electrical Appliance and Material Safety Law of Japan

Downloaded from Arrow.com.

■ G-TWIN Standard Series / Motor protection

Ampere frame				50A		
Type				**BW50EAM**	**BW50SAM**	**BW50RAM**
Pole				3	3	3
Rated current Reference amb. temp. (40°C)		In(A)		24, 32, 40, 45	0.7, 1.4, 2, 2.6, 4, 5, 8, 10, 12, 16, 24, 32, 40, 45	10, 12, 16, 24, 32, 40, 45
Rated impulse withstand voltage		Uimp(kV)		6	6	6
Isolation compliant				●	●	●
Rated insulation voltage Ui (V)		AC		500	690	690
Rated breaking capacity Icu/Ics (kA)	IEC 60947-2 EN 60947-2 JIS C 8201-2-1	AC	690V	–	–	–
			500V	1.5/1	5/3	7.5/4
			440V	2.5/2	7.5/4	10/5
			415V	2.5/2	7.5/4	10/5
			400V	2.5/2	7.5/4	10/5
			380V	2.5/2	7.5/4	10/5
			240V	5/3	10/5	25/13
			230V	5/3	10/5	25/13
	GB14048.2	AC	400V	2.5/2	7.5/4	10/5
			230V	5/3	10/5	25/13
Conforming to standards	CE Marking			●	●	●
	CCC certificate			●	●	●
	Electrical Appliance and Material Safety Law <PS>E*2			●	●	●
Dimensions (mm) 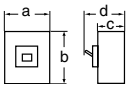			a	75	75	75
			b	100	100	100
			c	60	60	60
			d	84	84	84
Mass (kg)				0.5	0.5	0.5
Tripping device				Hydraulic-magnetic	Hydraulic-magnetic	Hydraulic-magnetic
Front mounting, front connection			No-mark	○	○	○
Front mounting, rear connection			X	○	○	○
Flush mounting, front connection			E	○	○	○
Flush mounting, top & buttom connection			Y	○	○	○
Plug-in mounting			P	○	○	○
IEC 35mm wide rail mounting				○	○	○
Internal accessories			Page 06/63			
Alarm switch			K	○	○	○
Auxiliary switch			W	○	○	○
Undervoltage trip			R	○	○	○
Shunt trip			F	○	○	○
External accessories			Page 06/66			
Handle padlocking device Cap type			QN	○	○	○
Handle padlocking device Plate type			Q2	▲	▲	▲
Operating handle N-type			N	○	○	○
Operating handle V-type			V	○	○	○
Terminal cover Short			BT□S	○	○	○
Terminal cover Long			BT□L	○	○	○
Insulation barrier Interphase			BP	○	○	○
Insulation barrier Earth			BL	○	○	○
Handle locking cover			L1	○	○	○
Flat terminal			SS	○	○	○
Block terminal			SL	–	–	–

●: Approved ○: Available –: Not available ▲ : Factory-mounted accessory
Note: *1 Specify DC only when ordering circuit breakers for DC circuit.
*2 Electrical Appliance and Material Safety Law of Japan

06

Downloaded from Arrow.com.

■ G-TWIN Standard Series / Motor protection

Ampere frame				63A		100A
Type				**BW63EAM**	**BW63SAM**	**BW100EAM**
Pole				3	3	3
Rated current Reference amb. temp. (40°C)		In(A)		63	63	63, 75, 90
Rated impulse withstand voltage		Uimp(kV)		6	6	6
Isolation compliant				●	●	●
Rated insulation voltage Ui (V)		AC		690	690	690
Rated breaking capacity Icu/Ics (kA)	IEC 60947-2 EN 60947-2 JIS C 8201-2-1	AC	690V	–	–	–
			500V	1.5/1	5/3	7.5/4
			440V	2.5/2	7.5/4	10/5
			415V	2.5/2	7.5/4	10/5
			400V	2.5/2	7.5/4	10/5
			380V	2.5/2	7.5/4	10/5
			240V	5/3	10/5	25/13
			230V	5/3	10/5	25/13
	GB14048.2	AC	400V	2.5/2	7.5/4	10/5
			230V	5/3	10/5	25/13
Conforming to standards	CE Marking			●	●	●
	CCC certificate			●	●	●
	Electrical Appliance and Material Safety Law <PS>E*2			●	●	●
Dimensions (mm) 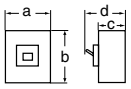			a	75	75	75
			b	100	100	100
			c	60	60	60
			d	84	84	84
Mass (kg)				0.6	0.6	0.6
Tripping device				Hydraulic-magnetic	Hydraulic-magnetic	Hydraulic-magnetic
Front mounting, front connection			No-mark	○	○	○
Front mounting, rear connection			X	○	○	○
Flush mounting, front connection			E	○	○	○
Flush mounting, top & buttom connection			Y	○	○	○
Plug-in mounting			P	○	○	○
IEC 35mm wide rail mounting				○	○	○
Internal accessories			Page 06/63			
Alarm switch			K	○	○	○
Auxiliary switch			W	○	○	○
Undervoltage trip			R	○	○	○
Shunt trip			F	○	○	○
External accessories			Page 06/66			
Handle padlocking device	Cap type		QN	○	○	○
Handle padlocking device	Plate type		Q2	▲	▲	▲
Operating handle	N-type		N	○	○	○
Operating handle	V-type		V	○	○	○
Terminal cover	Short		BT□S	○	○	○
Terminal cover	Long		BT□L	○	○	○
Insulation barrier	Interphase		BP	○	○	○
Insulation barrier	Earth		BL			
Handle locking cover			L1	○	○	○
Flat terminal			SS	○	○	○
Block terminal			SL	○	○	○

●: Approved ○: Available –: Not available ▲ : Factory-mounted accessory
Note: *1 Specify DC only when ordering circuit breakers for DC circuit.
*2 Electrical Appliance and Material Safety Law of Japan

Downloaded from Arrow.com.

■ G-TWIN Standard Series / Motor protection

Ampere frame				125A		250A		
Type				**BW125JAM**	**BW125RAM**	**BW250EAM**	**BW250JAM**	**BW250RAM**
Pole				3	3	3	3	3
Rated current Reference amb. temp. (40°C)		In(A)		16, 24, 32, 40, 45, 60, 75, 90		125, 150, 175, 225		
Rated impulse withstand voltage		Uimp(kV)		6	6	6	6	6
Isolation compliant				●	●	●	●	●
Rated insulation voltage Ui (V)		AC		690	690	690	690	690
Rated breaking capacity Icu/Ics (kA)	IEC 60947-2 EN 60947-2 JIS C 8201-2-1	AC	690V	–	–	–	–	–
			500V	8/4	10/5	5/3	8/4	10/5
			440V	30/15	50/25	18/9	30/15	50/25
			415V	30/15	50/25	18/9	30/15	50/25
			400V	30/15	50/25	18/9	30/15	50/25
			380V	30/15	50/25	18/9	30/15	50/25
			240V	50/25	100/50	36/18	50/25	100/50
			230V	50/25	100/50	36/18	50/25	100/50
	GB14048.2	AC	400V	30/15	50/25	18/9	30/15	50/25
			230V	50/25	100/50	36/18	50/25	100/50
Conforming to standards	CE Marking			●	●	●	●	●
	CCC certificate			●	●	●	●	●
	Electrical Appliance and Material Safety Law <PS>E*2			●	●	–	–	–
Dimensions (mm)	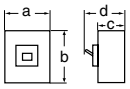		a	90	90	105	105	105
			b	155	155	165	165	165
			c	68	68	68	68	68
			d	95	95	95	95	95
Mass (kg)				1.2	1.2	1.6	1.6	1.6
Tripping device				Thermal-magnetic	Thermal-magnetic	Thermal-magnetic	Thermal-magnetic	Thermal-magnetic
Front mounting, front connection			No-mark	○	○	○	○	○
Front mounting, rear connection			X	○	○	○	○	○
Flush mounting, front connection			E	○	○	○	○	○
Flush mounting, top & buttom connection			Y	○	○	○	○	○
Plug-in mounting			P	○	○	○	○	○
IEC 35mm wide rail mounting				○	○	○	○	○
Internal accessories			Page 06/64					
Alarm switch			K	○	○	○	○	○
Auxiliary switch			W	○	○	○	○	○
Undervoltage trip			R	○	○	○	○	○
Shunt trip			F	○	○	○	○	○
External accessories			Page 06/66					
Handle padlocking device Cap type			Q1	○	○	○	○	○
Handle padlocking device Plate type			Q2	○	○	○	○	○
Operating handle N-type			N	○	○	○	○	○
Operating handle V-type			V	○	○	○	○	○
Terminal cover Short			BT□S	○	○	○	○	○
Terminal cover Long			BT□L	○	○	○	○	○
Insulation barrier Interphase			BP	○	○	○	○	○
Handle locking cover			L1	○	○	○	○	○
Flat terminal			SS	○	○	○	○	○
Block terminal			SL	○	○	○	○	○

●: Approved ○: Available –: Not available ▲: Factory-mounted accessory
Note: *1 Specify DC only when ordering circuit breakers for DC circuit.
*2 Electrical Appliance and Material Safety Law of Japan

06

Downloaded from Arrow.com.

■ Mounting modifications

• Standard series

Standard type FUJI breakers are front mounting with front connections. The standard breaker can easily be modified to become front mounting rear connection type, flush mounting type and plug-in type. The additional parts such as insulation bases, barriers, covers and similar parts are added as required.

Front mounting
Front connection

BASIC DESIGN

Additional main parts	Front mounting Rear connection (X type)
Bar stud terminal 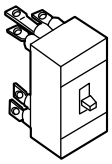	BW32 BW50 BW63 BW100
Bar stud terminal 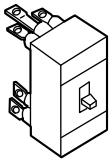	BW50HAG BW125 BW160 BW250 BW400 BW630 BW800 Each stud can be turned by 90°

Additional main parts	Flush mounting Rear connection (E type)
Bar stud terminal 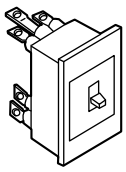	BW32 BW50 BW63 BW100
Bar stud terminal 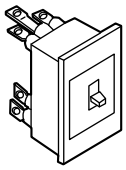	BW50HAG BW125 BW160 BW250 BW400 BW630 BW800 Each stud can be turned by 90°

Additional main parts	Flush mounting Top and bottom connection (Y type)
Decorative flush plate 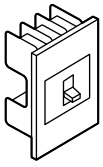	BW32 BW50 BW63 BW100

Additional main parts	Plug-in mounting (P type)
Bar stud terminal 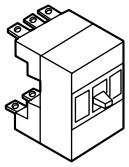	BW32 BW50 BW63 BW100
Round stud terminal 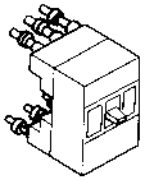	BW50HAG BW125
Bar stud terminal 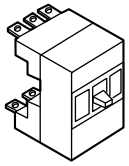	BW160 BW250 BW400 BW630 BW800 Each stud can be turned by 90°

Downloaded from Arrow.com.

• **Global series**

Front mounting
Front connection

BASIC DESIGN

Screw	Flat terminal	Block terminal
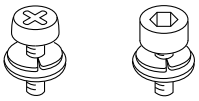	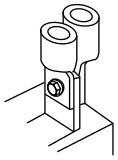	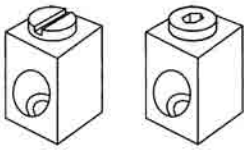

Downloaded from Arrow.com.

■ Terminal connection/Front mounting, front connection

• 32AF to 100AF

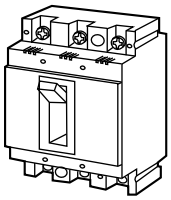

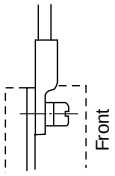

Flat terminal

Self lifting screw	Breaker type	Tightening torque (N•m)	Size
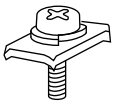	BW32 BW50 BW100*	2.3 to 2.8	M5×14
Pan-head screw 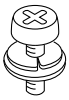	BW63 BW100	5.5 to 7.5	M8×15

* Breaker of rated current : 50A

• 125AF to 250AF

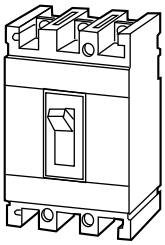

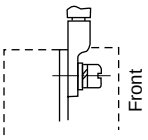

Pan-head screw 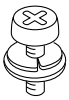	Breaker type	Tightening torque (N•m)	Size (mm)
	BW50HAG BW125	5.5 to 7.5	M8×16
Hexagonal socket head bolt	BW160 BW250	8.0 to 13.0	M8×16

• 400AF to 800AF

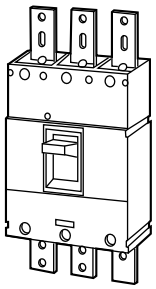

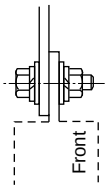

Flat terminal

Hexagonal head bolt 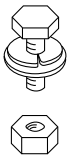	Breaker type	Tightening torque (N•m)	Size (mm)
	BW400	40 to 50	M12×35
	BW630 BW800	40 to 50	M12×40

Type of connection/up to 250AF
Front mounting front connection

Direct connection

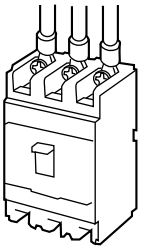

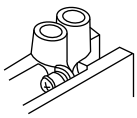

Flat terminal connection
Flat terminals are required.

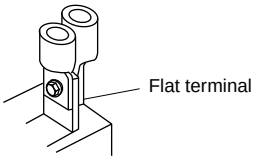

Flat bar studs/1-hole type

Breaker type	Pole	Type of flat terminal
BW32 BW50	2 3	**BZ6S10C502** **BZ6S10C503**
BW63 BW100*	2 3	**BZ6S10C1002** **BZ6S10C1003**
BW50HAG BW125	2 3 4	**BW9SS0CA-2** **BW9SS0CA-3** **BW9SS0CA-4**
BW160 BW250	2 3 4	**BZ-S50B-2252** **BZ-S50B-2253** **BW9SS0GA-4**

* BW100 breaker of rated current 50A: BZ6S10C502 or 503.

Downloaded from Arrow.com.

■ Wire size and crimp terminal

The following is the size recommendations for crimp terminals.

Crimp terminal R : JIS C2805
CB : JEM-1399
JST : Product of Japan Crimp Terminal Co., Ltd.

Ampere frame	Breaker	Wire size(mm^2)										
		1.04 | 2.63	2.63 | 6.64	6.64 | 10.52	10.52 | 16.78	16.78 | 26.66	26.66 | 42.42	42.42 | 60.57	96.3 | 117.2	117.2 | 152.05	192.6 | 242.27	242.27 | 325
32	BW32	R2-5	R5.5-5	R8-5	R14-5							
50	BW50AAG,EAG,SAG	R2-5	R5.5-5	R8-5	R14-5							
	BW50HAG	R2-8	R5.5-8	R8-8	R14-8	R22-8	JST38-S8	CB60-8				
63	BW63	R2-8	R5.5-8	R8-8	R14-8	JST22-S8						
100	BW100	R2-8	R5.5-8	R8-8	R14-8	JST22-S8	JST38-S8					
125	BW125	R2-8	R5.5-8	R8-8	R14-8	R22-8	JST38-S8	CB60-8				
160 250	BW160 BW250					R22-8	R38-8	R60-8	CB100-8			
400	BW400						R38-12	R60-12	R100-12	R150-12	R200-12	JST325-12
630	BW630								R100-12	R150-12	R200-12	JST325-12
800	BW800								R100-12	R150-12	R200-12	JST325-12

■ Breaker termination

• Standard

MCCB type	Front connection	Rear connection **X**	Flush mounting **E**	**Y**	Plug-in mounting **P**
BW32 BW50	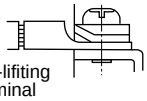 Self-lifiting terminal	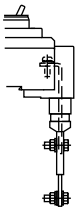	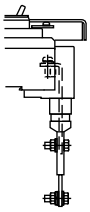	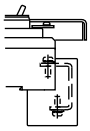	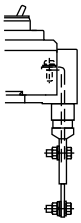
BW63 BW100	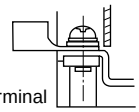 Flat terminal				
BW50HAG BW125		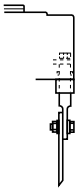 90° rotational stud	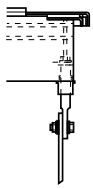 90° rotational stud	—	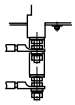
BW160 BW250	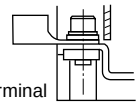 Flat terminal				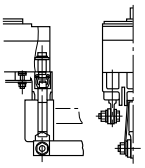 90° rotational stud
BW400 BW630 BW800	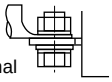 Flat terminal				

06

Downloaded from Arrow.com.

■ Notes on wiring (global series)

Notes on connecting wires (conductors)

- Connect wires to the UL breaker according to NEC (National Electric Code) or CEC (Canadian Electrical Code) Part 1.
- Use 75°C copper wires for wiring. UL-certified or CSA-certified wires are recommended.
- If a large current (for example, a short-circuit current) flows, it causes a huge electromagnetic force between wires. Therefore, be sure to secure the wires sufficiently.
- Re-tighten terminal screws periodically.

	Terminal position		Applicable breaker type		
Code	Line	Load	BW50	BW100, 125, 250	BW400, 630, 800
Blank	Screw	Screw	●	●	–
Blank	Flat teminal	Flat teminal	–	–	●
SB	Block terminal	Block terminal	–	●	●
SF	Flat teminal	Flat teminal	●	●	–
S3	Screw	Flat terminal	●	●	–
S4	Flat teminal	Screw	●	●	–
S5	Screw	Block terminal	–	●	–
S6	Block terminal	Screw	–	●	–
S7	Flat teminal	Block terminal	–	●	●
S8	Block terminal	Flat terminal	–	●	●

Block terminal connection

- Choose from the stranded wires shown in Table.

Wire size: AWG or MCM [mm^2]	No. of wires stranded
14 to 2 [2.1 to 33.6]	7
1 to 4/0 [42.4 to 107.2]	19
250 to 500 [127 to 250]	37

Values in [ ] are those converted from AWG or MCM sizes to mm^2.

* See the instruction manual that comes with the breaker for more details.

Precautions

- Two wires of different sizes cannot be connected to the same block terminal.
- Be sure to use stranded wires according to Table "Number of wires stranded."
- Multi-conductor wires cannot be connected.
- Do not solder wires together.

Wire size and crimp terminal

• Crimp terminal connection

MCCB	Rated current (A)	Applicable crimp terminal 75˚C wire			Connectable wire size (AWG)	Tightening torque (N•m)	Type of screw head and size (mm)
		J.S.T Mfg. Co., Ltd.	Nichifu Co., Ltd.	Daido Solderless Terminal Mfg. Co., Ltd.	75˚C wire		
BW50RAGU	3	R2-5	R2-5M R2-5	2-S5, 2-5	14AWG	2.3-2.8	Cross/straight slotted pan-head screw M5 x 14
	5						
	10						
	15						
	20	R5.5-5	R3.5-5S, R3.5-5L, 5.5-6N, R5.5-5S, R5.5-5	3.5-5, 5.5-S5, 5.5-5, 5.5-L5	12AWG		
	30				10AWG		
	40	R8-5	R8-5S, R8-5	8-S5, 8-5	8AWG		
	50						
BW100EAGU	60	R14-8	R14-8S, R14-8	R14-S8, R14-8	6AWG	5.5-7.5	Cross/straight slotted pan-head screw M8 x 15
	75	22-S8	R22-8S, R22-8	R22-S8, 22-8	4AWG		
	100	38-S8	R38-8S	38-S8	3AWG		
BW125JAGU BW125RAGU	15	R2-8	R2-8	2-8, 2-B8	14AWG	5.8 (5.3-6.4)	Cross/straight slotted pan-head screw M8 x 16
	20	5.5-S8, R5.5-8	R3.5-8, R5.5-8	3.5-8, 5.5-8	12AWG		
	30		R5.5-8	5.5-8	10AWG		
	40	8-8NS, R8-8	R8-8	8-8	8AWG		
	50						
	60	14-8NS, 14-S8, R14-8	R14-8S, R14-8	14-S8, 14-8	6AWG		
	70	22-S8, R22-8, CB22-S8	R22-8S, R22-8, CB22-8S	22-S8, 22-8, CB22-8	4AWG		
	75						
	80						
	90	38-S8	R38-8S	38-S8	3AWG		
	100						
	125				1AWG		
BW250EAGU BW250JAGU BW250RAGU	125	38-S8, R38-8	R38-8S, R38-8	38-S8, 38-8	1AWG	10.5 (8-13)	Hexagon socket head bolt M8 x 16
	150	60-S8, R60-8	R60-8, CB60-8, CB60-8S	60-8, CB60-8	1/0AWG		
	175	70-8	R70-8	70-8	2/0AWG		
	200	CB80-S8		CB80-8	3/0AWG		
	225	CB100-S8		CB100-8	4/0AWG		
	250	CB150-S8	CB150-8	CB150-8	250MCM		

Notes: • AWG/MCM is the UL approved wire unit.
• The allowable temperature of wire is 75˚C. (UL CSA approved)
• Be sure to use UL-certified or CSA-certified crimp tools commercially available.

Downloaded from Arrow.com.

• Flat terminal connection

MCCB	Rated current (A)	Applicable crimp terminal 75˚C wire			Connectable wire size (AWG)	Tightening torque (N•m)		Type of screw head and size (mm)
		J.S.T Mfg. Co., Ltd.	Nichifu Co., Ltd.	Daido Solderless Terminal Mfg. Co., Ltd.	75˚C wire	Wire side	MCCB side	
BW50RAGU	3	R2-5	R2-5M R2-5	2-S5, 2-5	14AWG	3.5 to 4.5	2.3 to 2.8	Hexagon socket head bolt M5 x 16
	5							
	10							
	15							
	20	R5.5-5	R3.5-5S, R3.5-5L, 5.5-6N. R5.5-5S, R5.5-5	3.5-5, 5.5-S5 5.5-5, 5.5-L5	12AWG			
	30				10AWG			
	40	R8-5	R8-5S, R8-5	8-S5, 8-5	8AWG			
	50							
BW100EAGU	60	R14-8	R14-8S, R14-8	R14-S8, R14-8	6AWG	8 to 10	5.5 to 7.5	Hexagon socket head bolt M8 x 22
	75	22-S8	R22-8S, R22-8	R22-S8, 22-8	4AWG			
	100	38-S8	R38-8S	38-S8	3AWG			
BW125JAGU BW125RAGU	15	R2-8	R2-8	2-8, 2-B8	14AWG	9 (8 to 10)	5.8 (5.3 to 6.4)	Cross/straight slotted pan-head screw M8 x 16
	20	5.5-S8, R5.5-8	R3.5-8, R5.5-8	3.5-8, 5.5-8	12AWG			
	30		R5.5-8	5.5-8	10AWG			
	40	8-8NS, R8-8	R8-8	8-8	8AWG			
	50							
	60	14-8NS, 14-S8, R14-8	R14-8S, R14-8	14-S8, 14-8	6AWG			
	70	22-S8, R22-8, CB22-S8	R22-8S, R22-8, CB22-8S	22-S8, 22-8, CB22-8	4AWG			
	75							
	80							
	90	38-S8	R38-8S	38-S8	3AWG			
	100							
	125				1AWG			
BW250EAGU BW250JAGU BW250RAGU	125	38-S8, R38-8	R38-8S, R38-8	38-S8, 38-8	1AWG	9 (8 to 10)	10.5 (8 to 13)	Hexagon socket head bolt M8 x 16
	150	60-S8, R60-8	R60-8, CB60-8, CB60-8S	60-8, CB60-8	1/0AWG			
	175	70-8	R70-8	70-8	2/0AWG			
	200	CB80-S8		CB80-8	3/0AWG			
	225	CB100-S8		CB100-8	4/0AWG			
	250	CB150-S8	CB150-8	CB150-8	250MCM			
BW400EAGU BW400SAGU BW400RAGU BW400HAGU	250	150-12	R150-12		250MCM	45 (40 to 50)	43.5 (39.2 to 48)	Hexagon head bolt M12 x 35
	300	180-12	R180-12		350MCM			
	350	325-12	R325-12N		500MCM			
	400	325-12	R325-12N		500MCM			
		R80-12	R80-12		3/0AWG(x2)			
BW630RAGU BW630HAGU	500	R150-12		R150-12	250MCM(x2)	47.04 (42.4 to 51.7)	47.04 (42.4 to 51.7)	Hexagon head bolt M12 x 40
	600	180-12		R180-12	350MCM(x2)			
	630	325-12	R325-12N	R325-12 □	500MCM(x2)			
BW800RAGU BW800HAGU	700	325-12		R325-12 □	500MCM(x2)	47.04 (42.4 to 51.7)	47.04 (42.4 to 51.7)	Hexagon head bolt M12 x 40

Notes: • AWG/MCM is the UL approved wire unit.
• The allowable temperature of wire is 75˚C. (UL CSA approved)

Downloaded from Arrow.com.

Wire size and terminal

• Block terminal connection

MCCB	Rated current (A)	Connectable wire size (AWG)	Tightening torque (N•m)	Type of screw head and size (mm)	Figure
BW100EAGU	60	6AWG	5.8 (5.5 to 6.5)	Slotted set screw	
	70	4AWG			
	75				
	80				
	90	3AWG			
	100				
BW125JAGU BW125RAGU	15	14AWG	5.8 (5.8 to 6.4)	Slotted set screw	
	20	12AWG			
	30	10AWG			
	40	8AWG			
	50				
	60	6AWG			
	70	4AWG			
	75				
	80				
	90	3AWG			
	100				
	125	1AWG			
BW250EAGU BW250JAGU BW250RAGU	125	1AWG	23 (23 to 25.3)	Hexagon socket head setscrew: 8 mm (5/16 inch)	Screw head size 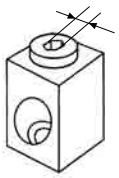
	150	1/0AWG			
	175	2/0AWG			
	200	3/0AWG			
	225	4/0AWG			
	250	250MCM			
BW400EAGU BW400SAGU BW400RAGU BW400HAGU	250	250MCM	43.5 (43.5 to 48)	Hexagon socket head setscrew: 9.53 mm (3/8 inch)	
	300	350MCM			
	350	500MCM			
	400	3/0AWG(x2)	31.9 (31.9 to 35.1)	Hexagon socket head setscrew: 8 mm (5/16 inch)	
BW630RAGU BW630HAGU	500	250MCM(x2)	31.1 (31.1 to 34.2)	Hexagon socket head setscrew: 8 mm (5/16 inch)	
	600	350MCM(x2)			
BW800RAGU BW800HAGU	700	500MCM(x2)	31.1 (31.1 to 34.2)	Hexagon socket head setscrew: 8 mm (5/16 inch)	
	800	300MCM(x3)			

Notes: • AWG/MCM is the UL approved wire unit.
• The allowable temperature of wire is 75˚C. (UL CSA approved)

Downloaded from Arrow.com.

■ Type number, Standard series (Line protection)

● AAG series, 2-pole IEC/EN/GB/JIS conformed

Breaker ampere frame	Rated current (A)	Type	□: Available mounting and connection
32	3	BW32AAG-2P003□	Blank, X, E, Y, P
	5	BW32AAG-2P005□	
	10	BW32AAG-2P010□	
	15	BW32AAG-2P015□	
	20	BW32AAG-2P020□	
	30	BW32AAG-2P030□	
	32	BW32AAG-2P032□	
50	5	BW50AAG-2P005□	Blank, X, E, Y, P
	10	BW50AAG-2P010□	
	15	BW50AAG-2P015□	
	20	BW50AAG-2P020□	
	30	BW50AAG-2P030□	
	32	BW50AAG-2P032□	
	40	BW50AAG-2P040□	
	50	BW50AAG-2P050□	

Mounting	Connection	□
Front	Front	Blank
Front	Rear	X
Flush	Rear	E
Flush	Top and buttom	Y
Plug-in		P

● EAG series, 2-pole IEC/EN/GB/JIS conformed

Breaker ampere frame	Rated current (A)	Type	□: Available mounting and connection
50	5	BW50EAG-2P005□	Blank, X, E, Y, P
	10	BW50EAG-2P010□	
	15	BW50EAG-2P015□	
	20	BW50EAG-2P020□	
	30	BW50EAG-2P030□	
	32	BW50EAG-2P032□	
	40	BW50EAG-2P040□	
	50	BW50EAG-2P050□	
63	60	BW63EAG-2P060□	Blank, X, E, Y, P
	63	BW63EAG-2P063□	
100	50	BW100EAG-2P050□	Blank, X, E, Y, P
	60	BW100EAG-2P060□	
	63	BW100EAG-2P063□	
	75	BW100EAG-2P075□	
	100	BW100EAG-2P100□	
160	125	BW160EAG-2P125□	Blank, X, E, P
	150	BW160EAG-2P150□	
	160	BW160EAG-2P160□	
250	175	BW250EAG-2P175□	Blank, X, E, P
	200	BW250EAG-2P200□	
	225	BW250EAG-2P225□	
	250	BW250EAG-2P250□	
400	250	BW400EAG-2P250□	Blank, X, E, P
	300	BW400EAG-2P300□	
	350	BW400EAG-2P350□	
	400	BW400EAG-2P400□	

● JAG series, 2-pole IEC/EN/GB/JIS conformed

Breaker ampere frame	Rated current (A)	Type	□: Available mounting and connection
125	15	BW125JAG-2P015□	Blank, X, E, P
	20	BW125JAG-2P020□	
	30	BW125JAG-2P030□	
	40	BW125JAG-2P040□	
	50	BW125JAG-2P050□	
	60	BW125JAG-2P060□	
	75	BW125JAG-2P075□	
	100	BW125JAG-2P100□	
	125	BW125JAG-2P125□	
160	125	BW160JAG-2P125□	Blank, X, E, P
	150	BW160JAG-2P150□	
	160	BW160JAG-2P160□	
250	175	BW250JAG-2P175□	Blank, X, E, P
	200	BW250JAG-2P200□	
	225	BW250JAG-2P225□	
	250	BW250JAG-2P250□	

Downloaded from Arrow.com.

● SAG series, 2-pole IEC/EN/GB/JIS conformed

Breaker ampere frame	Rated current (A)	Type	□: Available mounting and connection*
32	3	BW32SAG-2P003□	Blank, X, E, Y, P
	5	BW32SAG-2P005□	
	10	BW32SAG-2P010□	
	15	BW32SAG-2P015□	
	20	BW32SAG-2P020□	
	30	BW32SAG-2P030□	
	32	BW32SAG-2P032□	
50	5	BW50SAG-2P005□	Blank, X, E, Y, P
	10	BW50SAG-2P010□	
	15	BW50SAG-2P015□	
	20	BW50SAG-2P020□	
	30	BW50SAG-2P030□	
	32	BW50SAG-2P032□	
	40	BW50SAG-2P040□	
	50	BW50SAG-2P050□	
63	60	BW63SAG-2P060□	Blank, X, E, Y, P
	63	BW63SAG-2P063□	
125	15	BW125SAG-2P015□	Blank, X, E, P
	20	BW125SAG-2P020□	
	30	BW125SAG-2P030□	
	40	BW125SAG-2P040□	
	50	BW125SAG-2P050□	
	60	BW125SAG-2P060□	
	75	BW125SAG-2P075□	
	100	BW125SAG-2P100□	
	125	BW125SAG-2P125□	
160	125	BW160SAG-2P125□	Blank, X, E, P
	150	BW160SAG-2P150□	
	160	BW160SAG-2P160□	
250	175	BW250SAG-2P175□	Blank, X, E, P
	200	BW250SAG-2P200□	
	225	BW250SAG-2P225□	
	250	BW250SAG-2P250□	
400	250	BW400SAG-2P250□	Blank, X, E, P
	300	BW400SAG-2P300□	
	350	BW400SAG-2P350□	
	400	BW400SAG-2P400□	

● HAG series, 2-pole IEC/EN/GB/JIS conformed

Breaker ampere frame	Rated current (A)	Type	□: Available mounting and connection*
400	250	BW400HAG-2P250□	Blank, X, E, P
	300	BW400HAG-2P300□	
	350	BW400HAG-2P350□	
	400	BW400HAG-2P400□	

* See page 06/29.

● RAG series, 2-pole IEC/EN/GB/JIS conformed

Breaker ampere frame	Rated current (A)	Type	□: Available mounting and connection*
50	10	BW50RAG-2P010□	Blank, X, E, Y, P
	15	BW50RAG-2P015□	
	20	BW50RAG-2P020□	
	30	BW50RAG-2P030□	
	32	BW50RAG-2P032□	
	40	BW50RAG-2P040□	
	50	BW50RAG-2P050□	
63	60	BW63RAG-2P060□	Blank, X, E, Y, P
	63	BW63RAG-2P063□	
125	15	BW125RAG-2P015□	Blank, X, E, P
	20	BW125RAG-2P020□	
	30	BW125RAG-2P030□	
	40	BW125RAG-2P040□	
	50	BW125RAG-2P050□	
	60	BW125RAG-2P060□	
	75	BW125RAG-2P075□	
	100	BW125RAG-2P100□	
	125	BW125RAG-2P125□	
160	125	BW160RAG-2P125□	Blank, X, E, P
	150	BW160RAG-2P150□	
	160	BW160RAG-2P160□	
250	175	BW250RAG-2P175□	Blank, X, E, P
	200	BW250RAG-2P200□	
	225	BW250RAG-2P225□	
	250	BW250RAG-2P250□	
400	250	BW400RAG-2P250□	Blank, X, E, P
	300	BW400RAG-2P300□	
	350	BW400RAG-2P350□	
	400	BW400RAG-2P400□	

● HAG series, 2-pole IEC/EN/JIS conformed

Breaker ampere frame	Rated current (A)	Type	□: Available mounting and connection*
50	15	BW50HAG-2P015□	Blank, X, E, P
	20	BW50HAG-2P020□	
	30	BW50HAG-2P030□	
	40	BW50HAG-2P040□	
	50	BW50HAG-2P050□	
125	15	BW125HAG-2P015□	Blank, X, E, P
	20	BW125HAG-2P020□	
	30	BW125HAG-2P030□	
	40	BW125HAG-2P040□	
	50	BW125HAG-2P050□	
	60	BW125HAG-2P060□	
	75	BW125HAG-2P075□	
	100	BW125HAG-2P100□	
	125	BW125HAG-2P125□	
250	125	BW250HAG-2P125□	Blank, X, E, P
	150	BW250HAG-2P150□	
	160	BW250HAG-2P160□	
	175	BW250HAG-2P175□	
	200	BW250HAG-2P200□	
	225	BW250HAG-2P225□	
	250	BW250HAG-2P250□	

Downloaded from Arrow.com.

● AAG series, 3-pole IEC/EN/GB/JIS conformed

Breaker ampere frame	Rated current (A)	Type	□: Available mounting and connection*
32	3	BW32AAG-3P003□	Blank, X, E, Y, P
	5	BW32AAG-3P005□	
	10	BW32AAG-3P010□	
	15	BW32AAG-3P015□	
	20	BW32AAG-3P020□	
	30	BW32AAG-3P030□	
	32	BW32AAG-3P032□	
50	5	BW50AAG-3P005□	Blank, X, E, Y, P
	10	BW50AAG-3P010□	
	15	BW50AAG-3P015□	
	20	BW50AAG-3P020□	
	30	BW50AAG-3P030□	
	32	BW50AAG-3P032□	
	40	BW50AAG-3P040□	
	50	BW50AAG-3P050□	
100	60	BW100AAG-3P060□	Blank, X, E, Y, P
	63	BW100AAG-3P063□	
	75	BW100AAG-3P075□	
	100	BW100AAG-3P100□	

● EAG series, 3-pole IEC/EN/GB/JIS conformed

Breaker ampere frame	Rated current (A)	Type	□: Available mounting and connection*
50	5	BW50EAG-3P005□	Blank, X, E, Y, P
	10	BW50EAG-3P010□	
	15	BW50EAG-3P015□	
	20	BW50EAG-3P020□	
	30	BW50EAG-3P030□	
	32	BW50EAG-3P032□	
	40	BW50EAG-3P040□	
	50	BW50EAG-3P050□	
63	60	BW63EAG-3P060□	Blank, X, E, Y, P
	63	BW63EAG-3P063□	
100	50	BW100EAG-3P050□	Blank, X, E, Y, P
	60	BW100EAG-3P060□	
	63	BW100EAG-3P063□	
	75	BW100EAG-3P075□	
	100	BW100EAG-3P100□	
160	125	BW160EAG-3P125□	Blank, X, E, P
	150	BW160EAG-3P150□	
	160	BW160EAG-3P160□	
250	175	BW250EAG-3P175□	Blank, X, E, P
	200	BW250EAG-3P200□	
	225	BW250EAG-3P225□	
	250	BW250EAG-3P250□	
400	250	BW400EAG-3P250□	Blank, X, E, P
	300	BW400EAG-3P300□	
	350	BW400EAG-3P350□	
	400	BW400EAG-3P400□	
630	500	BW630EAG-3P500□	Blank, X, E, P
	600	BW630EAG-3P600□	
	630	BW630EAG-3P630□	
800	700	BW800EAG-3P700□	Blank, X, E, P
	800	BW800EAG-3P800□	

● JAG series, 3-pole IEC/EN/GB/JIS conformed

Breaker ampere frame	Rated current (A)	Type	□: Available mounting and connection*
125	15	BW125JAG-3P015□	Blank, X, E, P
	20	BW125JAG-3P020□	
	30	BW125JAG-3P030□	
	40	BW125JAG-3P040□	
	50	BW125JAG-3P050□	
	60	BW125JAG-3P060□	
	75	BW125JAG-3P075□	
	100	BW125JAG-3P100□	
	125	BW125JAG-3P125□	
160	125	BW160JAG-3P125□	Blank, X, E, P
	150	BW160JAG-3P150□	
	160	BW160JAG-3P160□	
250	175	BW250JAG-3P175□	Blank, X, E, P
	200	BW250JAG-3P200□	
	225	BW250JAG-3P225□	
	250	BW250JAG-3P250□	

* See page 06/29.

Downloaded from Arrow.com.

● SAG series, 3-pole IEC/EN/GB/JIS conformed

Breaker ampere frame	Rated current (A)	Type	□: Available mounting and connection*
32	3	BW32SAG-3P003□	Blank, X, E, Y, P
	5	BW32SAG-3P005□	
	10	BW32SAG-3P010□	
	15	BW32SAG-3P015□	
	20	BW32SAG-3P020□	
	30	BW32SAG-3P030□	
	32	BW32SAG-3P032□	
50	5	BW50SAG-3P005□	Blank, X, E, Y, P
	10	BW50SAG-3P010□	
	15	BW50SAG-3P015□	
	20	BW50SAG-3P020□	
	30	BW50SAG-3P030□	
	32	BW50SAG-3P032□	
	40	BW50SAG-3P040□	
	50	BW50SAG-3P050□	
63	60	BW63SAG-3P060□	Blank, X, E, Y, P
	63	BW63SAG-3P063□	
125	15	BW125SAG-3P015□	Blank, X, E, P
	20	BW125SAG-3P020□	
	30	BW125SAG-3P030□	
	40	BW125SAG-3P040□	
	50	BW125SAG-3P050□	
	60	BW125SAG-3P060□	
	75	BW125SAG-3P075□	
	100	BW125SAG-3P100□	
	125	BW125SAG-3P125□	
160	125	BW160SAG-3P125□	Blank, X, E, P
	150	BW160SAG-3P150□	
	160	BW160SAG-3P160□	
250	175	BW250SAG-3P175□	Blank, X, E, P
	200	BW250SAG-3P200□	
	225	BW250SAG-3P225□	
	250	BW250SAG-3P250□	
400	250	BW400SAG-3P250□	Blank, X, E, P
	300	BW400SAG-3P300□	
	350	BW400SAG-3P350□	
	400	BW400SAG-3P400□	

● RAG series, 3-pole IEC/EN/GB/JIS conformed

Breaker ampere frame	Rated current (A)	Type	□: Available mounting and connection*
50	10	BW50RAG-3P010□	Blank, X, E, Y, P
	15	BW50RAG-3P015□	
	20	BW50RAG-3P020□	
	30	BW50RAG-3P030□	
	32	BW50RAG-3P032□	
	40	BW50RAG-3P040□	
	50	BW50RAG-3P050□	
63	60	BW63RAG-3P060□	Blank, X, E, Y, P
	63	BW63RAG-3P063□	
125	15	BW125RAG-3P015□	Blank, X, E, P
	20	BW125RAG-3P020□	
	30	BW125RAG-3P030□	
	40	BW125RAG-3P040□	
	50	BW125RAG-3P050□	
	60	BW125RAG-3P060□	
	75	BW125RAG-3P075□	
	100	BW125RAG-3P100□	
	125	BW125RAG-3P125□	
160	125	BW160RAG-3P125□	Blank, X, E, P
	150	BW160RAG-3P150□	
	160	BW160RAG-3P160□	
250	175	BW250RAG-3P175□	Blank, X, E, P
	200	BW250RAG-3P200□	
	225	BW250RAG-3P225□	
	250	BW250RAG-3P250□	
400	250	BW400RAG-3P250□	Blank, X, E, P
	300	BW400RAG-3P300□	
	350	BW400RAG-3P350□	
	400	BW400RAG-3P400□	
630	500	BW630RAG-3P500□	Blank, X, E, P
	600	BW630RAG-3P600□	
	630	BW630RAG-3P630□	
800	700	BW800RAG-3P700□	Blank, X, E, P
	800	BW800RAG-3P800□	

● HAG series, 3-pole IEC/EN/GB/JIS conformed

Breaker ampere frame	Rated current (A)	Type	□: Available mounting and connection*
400	250	BW400HAG-3P250□	Blank, X, E, P
	300	BW400HAG-3P300□	
	350	BW400HAG-3P350□	
	400	BW400HAG-3P400□	
630	500	BW630HAG-3P500□	Blank, X, E, P
	600	BW630HAG-3P600□	
	630	BW630HAG-3P630□	
800	700	BW800HAG-3P700□	Blank, X, E, P
	800	BW800HAG-3P800□	

* See page 06/29.

Downloaded from Arrow.com.

● JAG series, 4-pole IEC/EN/GB/JIS conformed

Breaker ampere frame	Rated current (A)	Type	□: Available mounting and connection*
125	15	BW125JAG-4P015□	Blank, X, E
	20	BW125JAG-4P020□	
	30	BW125JAG-4P030□	
	40	BW125JAG-4P040□	
	50	BW125JAG-4P050□	
	60	BW125JAG-4P060□	
	75	BW125JAG-4P075□	
	100	BW125JAG-4P100□	
	125	BW125JAG-4P125□	
160	125	BW160JAG-4P125□	Blank, X, E
	150	BW160JAG-4P150□	
	160	BW160JAG-4P160□	
250	175	BW250JAG-4P175□	Blank, X, E
	200	BW250JAG-4P200□	
	225	BW250JAG-4P225□	
	250	BW250JAG-4P250□	

● SAG series, 4-pole IEC/EN/GB/JIS conformed

Breaker ampere frame	Rated current (A)	Type	□: Available mounting and connection*
125	15	BW125SAG-3P015□	Blank, X, E
	20	BW125SAG-3P020□	
	30	BW125SAG-3P030□	
	40	BW125SAG-3P040□	
	50	BW125SAG-3P050□	
	60	BW125SAG-3P060□	
	75	BW125SAG-3P075□	
	100	BW125SAG-3P100□	
	125	BW125SAG-3P125□	
160	125	BW160SAG-3P125□	Blank, X, E
	150	BW160SAG-3P150□	
	160	BW160SAG-3P160□	
250	175	BW250SAG-3P175□	Blank, X, E
	200	BW250SAG-3P200□	
	225	BW250SAG-3P225□	
	250	BW250SAG-3P250□	

● RAG series, 4-pole IEC/EN/GB/JIS conformed

Breaker ampere frame	Rated current (A)	Type	□: Available mounting and connection*
125	15	BW125RAG-4P015□	Blank, X, E
	20	BW125RAG-4P020□	
	30	BW125RAG-4P030□	
	40	BW125RAG-4P040□	
	50	BW125RAG-4P050□	
	60	BW125RAG-4P060□	
	75	BW125RAG-4P075□	
	100	BW125RAG-4P100□	
	125	BW125RAG-4P125□	
160	125	BW160RAG-4P125□	Blank, X, E
	150	BW160RAG-4P150□	
	160	BW160RAG-4P160□	
250	175	BW250RAG-4P175□	Blank, X, E
	200	BW250RAG-4P200□	
	225	BW250RAG-4P225□	
	250	BW250RAG-4P250□	
400	250	BW400RAG-4P250□	Blank, X, E
	300	BW400RAG-4P300□	
	350	BW400RAG-4P350□	
	400	BW400RAG-4P400□	
630	500	BW630RAG-4P500□	Blank, X, E
	600	BW630RAG-4P600□	
	630	BW630RAG-4P630□	
800	700	BW800RAG-4P700□	Blank, X, E
	800	BW800RAG-4P800□	

● HAG series, 4-pole IEC/EN/GB/JIS conformed

Breaker ampere frame	Rated current (A)	Type	□: Available mounting and connection*
400	250	BW400HAG-4P250□	Blank, X, E
	300	BW400HAG-4P300□	
	350	BW400HAG-4P350□	
	400	BW400HAG-4P400□	
630	500	BW630HAG-4P500□	Blank, X, E
	600	BW630HAG-4P600□	
	630	BW630HAG-4P630□	
800	700	BW800HAG-4P700□	Blank, X, E
	800	BW800HAG-4P800□	

* See page 06/29.

Downloaded from Arrow.com.

■ Type number, Global series (Line protection)

● EAGU series, 2-pole UL489 Listed

Breaker ampere frame	Rated current (A)	Type	□: Available mounting and connection
100	60	BW100EAGU-2P060□	Blank, SB, SF, S3
	63	BW100EAGU-2P063□	S4, S5, S6, S7, S8
	70	BW100EAGU-2P070□	
	75	BW100EAGU-2P075□	
	80	BW100EAGU-2P080□	
	90	BW100EAGU-2P090□	
	100	BW100EAGU-2P100□	
250	125	BW250EAGU-2P125□	Blank, SB, SF, S3
	150	BW250EAGU-2P150□	S4, S5, S6, S7, S8
	160	BW250EAGU-2P160□	
	175	BW250EAGU-2P175□	
	200	BW250EAGU-2P200□	
	225	BW250EAGU-2P225□	
	250	BW250EAGU-2P250□	
400	250	BW400EAGU-2P250□	Blank, SB, S7, S8
	300	BW400EAGU-2P300□	
	350	BW400EAGU-2P350□	
	400	BW400EAGU-2P400□	

● JAGU series, 2-pole UL489 Listed

Breaker ampere frame	Rated current (A)	Type	□: Available mounting and connection
125	15	BW125JAGU-2P015□	Blank, SB, SF, S3
	20	BW125JAGU-2P020□	S4, S5, S6, S7, S8
	30	BW125JAGU-2P030□	
	40	BW125JAGU-2P040□	
	50	BW125JAGU-2P050□	
	60	BW125JAGU-2P060□	
	70	BW125JAGU-2P070□	
	75	BW125JAGU-2P075□	
	80	BW125JAGU-2P080□	
	90	BW125JAGU-2P090□	
	100	BW125JAGU-2P100□	
	125	BW125JAGU-2P125□	
250	125	BW250JAGU-2P125□	Blank, SB, SF, S3
	150	BW250JAGU-2P150□	S4, S5, S6, S7, S8
	160	BW250JAGU-2P160□	
	175	BW250JAGU-2P175□	
	200	BW250JAGU-2P200□	
	225	BW250JAGU-2P225□	
	250	BW250JAGU-2P250□	

Terminal combination

□:	Terminal position		Breaker type		
Code	Line	Load	BW50	BW100,125,250	BW400,630,800
Blank	Screw	Screw	●	●	–
Blank	Flat terminal	Flat terminal	–	–	●
SB	Block terminal	Block terminal	–	●	●
SF	Flat terminal	Flat terminal	●	●	–
S3	Screw	Flat terminal	●	●	–
S4	Flat terminal	Screw	●	●	–
S5	Screw	Block terminal	–	●	–
S6	Block terminal	Screw	–	●	–
S7	Flat terminal	Block terminal	–	●	●
S8	Block terminal	Flat terminal	–	●	●

● SAGU series, 2-pole UL489 Listed

Breaker ampere frame	Rated current (A)	Type	□: Available mounting and connection
400	250	BW400SAGU-2P250□	Blank, SB, S7, S8
	300	BW400SAGU-2P300□	
	350	BW400SAGU-2P350□	
	400	BW400SAGU-2P400□	

● RAGU series, 2-pole UL489 Listed

Breaker ampere frame	Rated current (A)	Type	□: Available mounting and connection
50	3	BW50RAGU-2P003□	Blank, SF, S3, S4
	5	BW50RAGU-2P005□	
	10	BW50RAGU-2P010□	
	15	BW50RAGU-2P015□	
	20	BW50RAGU-2P020□	
	30	BW50RAGU-2P030□	
	32	BW50RAGU-2P032□	
	40	BW50RAGU-2P040□	
	50	BW50RAGU-2P050□	
125	15	BW125RAGU-2P015□	Blank, SB, SF, S3
	20	BW125RAGU-2P020□	S4, S5, S6, S7, S8
	30	BW125RAGU-2P030□	
	40	BW125RAGU-2P040□	
	50	BW125RAGU-2P050□	
	60	BW125RAGU-2P060□	
	70	BW125RAGU-2P070□	
	75	BW125RAGU-2P075□	
	80	BW125RAGU-2P080□	
	90	BW125RAGU-2P090□	
	100	BW125RAGU-2P100□	
	125	BW125RAGU-2P125□	
250	125	BW250RAGU-2P125□	Blank, SB, SF, S3
	150	BW250RAGU-2P150□	S4, S5, S6, S7, S8
	160	BW250RAGU-2P160□	
	175	BW250RAGU-2P175□	
	200	BW250RAGU-2P200□	
	225	BW250RAGU-2P225□	
	250	BW250RAGU-2P250□	
400	250	BW400RAGU-2P250□	Blank, SB, S7, S8
	300	BW400RAGU-2P300□	
	350	BW400RAGU-2P350□	
	400	BW400RAGU-2P400□	

● HAGU series, 2-pole UL489 Listed

Breaker ampere frame	Rated current (A)	Type	□: Available mounting and connection
400	250	BW400HAGU-2P250□	Blank, SB, S7, S8
	300	BW400HAGU-2P300□	
	350	BW400HAGU-2P350□	
	400	BW400HAGU-2P400□	

Downloaded from Arrow.com.

● EAGU series, 3-pole UL489 Listed

Breaker ampere frame	Rated current (A)	Type	□: Available mounting and connection*
100	60	BW100EAGU-3P060□	Blank, SB, SF, S3
	63	BW100EAGU-3P063□	S4, S5, S6, S7, S8
	70	BW100EAGU-3P070□	
	75	BW100EAGU-3P075□	
	80	BW100EAGU-3P080□	
	90	BW100EAGU-3P090□	
	100	BW100EAGU-3P100□	
250	125	BW250EAGU-3P125□	Blank, SB, SF, S3
	150	BW250EAGU-3P150□	S4, S5, S6, S7, S8
	160	BW250EAGU-3P160□	
	175	BW250EAGU-3P175□	
	200	BW250EAGU-3P200□	
	225	BW250EAGU-3P225□	
	250	BW250EAGU-3P250□	
400	250	BW400EAGU-3P250□	Blank, SB, S7, S8
	300	BW400EAGU-3P300□	
	350	BW400EAGU-3P350□	
	400	BW400EAGU-3P400□	

● JAGU series, 3-pole UL489 Listed

Breaker ampere frame	Rated current (A)	Type	□: Available mounting and connection*
125	15	BW125JAGU-3P015□	Blank, SB, SF, S3
	20	BW125JAGU-3P020□	S4, S5, S6, S7, S8
	30	BW125JAGU-3P030□	
	40	BW125JAGU-3P040□	
	50	BW125JAGU-3P050□	
	60	BW125JAGU-3P060□	
	70	BW125JAGU-3P070□	
	75	BW125JAGU-3P075□	
	80	BW125JAGU-3P080□	
	90	BW125JAGU-3P090□	
	100	BW125JAGU-3P100□	
	125	BW125JAGU-3P125□	
250	125	BW250JAGU-3P125□	Blank, SB, SF, S3
	150	BW250JAGU-3P150□	S4, S5, S6, S7, S8
	160	BW250JAGU-3P160□	
	175	BW250JAGU-3P175□	
	200	BW250JAGU-3P200□	
	225	BW250JAGU-3P225□	
	250	BW250JAGU-3P250□	

● SAGU series, 3-pole UL489 Listed

Breaker ampere frame	Rated current (A)	Type	□: Available mounting and connection*
400	250	BW400SAGU-3P250□	Blank, SB, S7, S8
	300	BW400SAGU-3P300□	
	350	BW400SAGU-3P350□	
	400	BW400SAGU-3P400□	

● RAGU series, 3-pole UL489 Listed

Breaker ampere frame	Rated current (A)	Type	□: Available mounting and connection*
50	3	BW50RAGU-3P003□	Blank, SB, S3, S4
	5	BW50RAGU-3P005□	
	10	BW50RAGU-3P010□	
	15	BW50RAGU-3P015□	
	20	BW50RAGU-3P020□	
	30	BW50RAGU-3P030□	
	32	BW50RAGU-3P032□	
	40	BW50RAGU-3P040□	
	50	BW50RAGU-3P050□	
125	15	BW125RAGU-3P015□	Blank, SB, SF, S3
	20	BW125RAGU-3P020□	S4, S5, S6, S7, S8
	30	BW125RAGU-3P030□	
	40	BW125RAGU-3P040□	
	50	BW125RAGU-3P050□	
	60	BW125RAGU-3P060□	
	70	BW125RAGU-3P070□	
	75	BW125RAGU-3P075□	
	80	BW125RAGU-3P080□	
	90	BW125RAGU-3P090□	
	100	BW125RAGU-3P100□	
	125	BW125RAGU-3P125□	
250	125	BW250RAGU-3P125□	Blank, SB, SF, S3
	150	BW250RAGU-3P150□	S4, S5, S6, S7, S8
	160	BW250RAGU-3P160□	
	175	BW250RAGU-3P175□	
	200	BW250RAGU-3P200□	
	225	BW250RAGU-3P225□	
	250	BW250RAGU-3P250□	
400	250	BW400RAGU-3P250□	Blank, SB, S7, S8
	300	BW400RAGU-3P300□	
	350	BW400RAGU-3P350□	
	400	BW400RAGU-3P400□	
630	500	BW630RAGU-3P500□	Blank, SB, S7, S8
	600	BW630RAGU-3P600□	
	630	BW630RAGU-3P630□	
800	700	BW800RAGU-3P700□	Blank, SB, S7, S8
	800	BW800RAGU-3P800□	

● HAGU series, 3-pole UL489 Listed

Breaker ampere frame	Rated current (A)	Type	□: Available mounting and connection*
400	250	BW400HAGU-3P250□	Blank, SB, S7, S8
	300	BW400HAGU-3P300□	
	350	BW400HAGU-3P350□	
	400	BW400HAGU-3P400□	
630	500	BW630HAGU-3P500□	Blank, SB, S7, S8
	600	BW630HAGU-3P600□	
	630	BW630HAGU-3P630□	
800	700	BW800HAGU-3P700□	Blank, SB, S7, S8
	800	BW800HAGU-3P800□	

* See page 06/34.

Downloaded from Arrow.com.

■ Type number, Standard series (Motor protection)

● SAM series, 2-pole IEC/EN/GB/JIS conformed

Breaker ampere frame	Rated current (A)	Type	□: Available mounting and connection
32	0.7	BW32SAM-2P0P7□	Blank, X, E, Y, P
	1.4	BW32SAM-2P1P4□	
	2.6	BW32SAM-2P2P6□	
	4	BW32SAM-2P004□	
	8	BW32SAM-2P008□	
	10	BW32SAM-2P010□	
	16	BW32SAM-2P016□	
	24	BW32SAM-2P024□	
	32	BW32SAM-2P032□	

Mounting	Connection	□
Front	Front	Blank
Front	Rear	X
Flush	Rear	E
Flush	Top and buttom	Y
Plug-in		P

● AAM series, 3-pole IEC/EN/GB/JIS conformed

Breaker ampere frame	Rated current (A)	Type	□: Available mounting and connection
32	1.4	BW32AAM-3P1P4□	Blank, X, E, Y, P
	2.6	BW32AAM-3P2P6□	
	4	BW32AAM-3P004□	
	8	BW32AAM-3P008□	
	10	BW32AAM-3P010□	
	16	BW32AAM-3P016□	
	24	BW32AAM-3P024□	
	32	BW32AAM-3P032□	

● EAM series, 3-pole IEC/EN/GB/JIS conformed

Breaker ampere frame	Rated current (A)	Type	□: Available mounting and connection
50	24	BW50EAM-3P024□	Blank, X, E, Y, P
	32	BW50EAM-3P032□	
	40	BW50EAM-3P040□	
	45	BW50EAM-3P045□	
63	63	BW63EAM-3P063□	Blank, X, E, Y, P
100	63	BW100EAM-3P063□	Blank, X, E, Y, P
	75	BW100EAM-3P075□	
	90	BW100EAM-3P090□	
250	125	BW250EAM-3P125□	Blank, X, E, P
	150	BW250EAM-3P150□	
	175	BW250EAM-3P175□	
	225	BW250EAM-3P225□	

● JAM series, 3-pole IEC/EN/GB/JIS conformed

Breaker ampere frame	Rated current (A)	Type	□: Available mounting and connection
125	16	BW125JAM-3P016□	Blank, X, E, P
	24	BW125JAM-3P024□	
	32	BW125JAM-3P032□	
	40	BW125JAM-3P040□	
	60	BW125JAM-3P060□	
	75	BW125JAM-3P075□	
	90	BW125JAM-3P090□	
250	125	BW250JAM-3P125□	Blank, X, E, P
	150	BW250JAM-3P150□	
	175	BW250JAM-3P175□	
	225	BW250JAM-3P225□	

Downloaded from Arrow.com.

● **SAM series, 3-pole IEC/EN/GB/JIS conformed**

Breaker ampere frame	Rated current (A)	Type	□: Available mounting and connection*
32	0.7	BW32SAM-3P0P7□	Blank, X, E, Y, P
	1.4	BW32SAM-3P1P4□	
	2.6	BW32SAM-3P2P6□	
	4	BW32SAM-3P004□	
	8	BW32SAM-3P008□	
	10	BW32SAM-3P010□	
	16	BW32SAM-3P016□	
	24	BW32SAM-3P024□	
	32	BW32SAM-3P032□	
50	0.7	BW50SAM-3P0P7□	Blank, X, E, Y, P
	1.4	BW50SAM-3P1P4□	
	2	BW50SAM-3P002□	
	2.6	BW50SAM-3P2P6□	
	4	BW50SAM-3P004□	
	5	BW50SAM-3P005□	
	8	BW50SAM-3P008□	
	10	BW50SAM-3P010□	
	12	BW50SAM-3P012□	
	16	BW50SAM-3P016□	
	24	BW50SAM-3P024□	
	32	BW50SAM-3P032□	
	40	BW50SAM-3P040□	
	45	BW50SAM-3P045□	
63	63	BW63SAM-3P063□	Blank, X, E, Y, P

● **RAM series, 3-pole IEC/EN/GB/JIS conformed**

Breaker ampere frame	Rated current (A)	Type	□: Available mounting and connection*
50	0.7	BW50RAM-3P0P7□	Blank, X, E, Y, P
	1.4	BW50RAM-3P1P4□	
	2	BW50RAM-3P002□	
	2.6	BW50RAM-3P2P6□	
	4	BW50RAM-3P004□	
	5	BW50RAM-3P005□	
	8	BW50RAM-3P008□	
	10	BW50RAM-3P010□	
	12	BW50RAM-3P012□	
	16	BW50RAM-3P016□	
	24	BW50RAM-3P024□	
	32	BW50RAM-3P032□	
	40	BW50RAM-3P040□	
	45	BW50RAM-3P045□	
125	16	BW125RAM-3P016□	Blank, X, E, P
	24	BW125RAM-3P024□	
	32	BW125RAM-3P032□	
	40	BW125RAM-3P040□	
	60	BW125RAM-3P060□	
	75	BW125RAM-3P075□	
	90	BW125RAM-3P090□	
250	125	BW250RAM-3P125□	Blank, X, E, P
	150	BW250RAM-3P150□	
	175	BW250RAM-3P175□	
	225	BW250RAM-3P225□	

* See page 06/36.

Downloaded from Arrow.com.

■ Arc space, mm

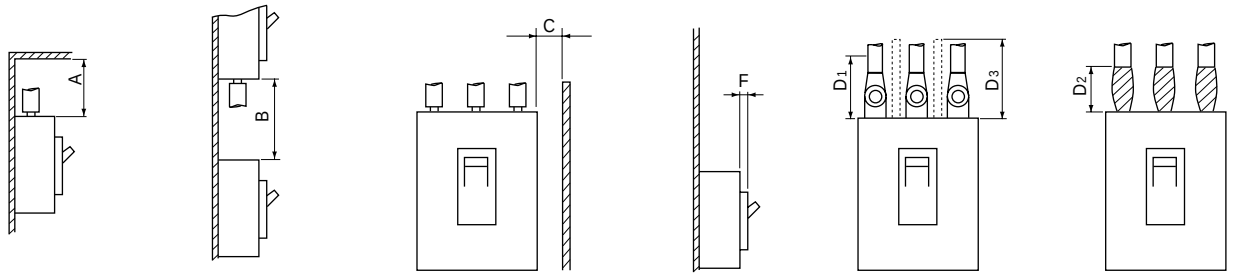

Frame size	MCCB basic type	Ceiling distance A		Vertical distance B		Side plate distance C		Front plate distance Painted F		Front plate distance No painted F		Taping Crimp type terminal lug D1	Taping Bus-bar D2	Barrier D3
		440V	230V	440V	230V	440V	230V	440V	230V	440V	230V			
32A	BW32A	–	10	–	10	–	10	–	0	–	0	Exposed live part dimension +20	10	10
	BW32S	10	10	30	30	20	15	0	0	0	0		30	30
50A	BW50A	–	10	–	10	–	10	–	0	–	0		10	10
	BW50E	10	10	30	30	25	15	0	0	0	0		30	30
	BW50S	30	10	40	40	25	15	0	0	0	0		30	30
	BW50R	50	25	50	50	25	15	0	0	10	5		50	50
	BW50H	60	60	80	80	50	20	5	0	10	5		80	80
63A	BW63E	10	10	30	30	25	15	0	0	0	0		30	30
	BW63S	30	10	40	40	25	15	0	0	0	0		30	30
	BW63R	50	25	50	50	25	15	0	0	10	5		50	50
100A	BW100A	–	10	–	20	–	15	–	0	–	0		50	50
	BW100E	50	25	50	50	25	15	0	0	10	5		50	50
125A	BW125J	40	40	50	50	25	20	0	0	10	5		50	50
	BW125S	40	40	60	60	25	20	5	0	10	5		50	50
	BW125R	40	40	60	60	25	20	5	0	10	5		50	50
	BW125H	60	60	80	80	50	20	5	0	10	5		80	80
160A	BW160E	40	40	50	50	50	15	0	0	10	5		80	80
	BW160J	40	40	60	60	50	20	0	0	10	5		80	80
	BW160S	40	40	80	80	50	20	5	0	10	10		80	80
	BW160R	40	40	80	80	50	20	5	0	10	10		80	80
250A	BW250E	40	40	50	50	50	15	0	0	10	5		80	80
	BW250J	40	40	60	60	50	20	0	0	10	5		80	80
	BW250S	40	40	80	80	50	20	5	0	10	10		80	80
	BW250R	40	40	80	80	50	20	5	0	10	10		80	80
	BW250H	60	60	80	80	60	60	5	0	10	10		80	80
400A	BW400E	100	80	100	80	50	20	0	0	10	5		100	100
	BW400S	100	80	100	80	50	20	0	0	10	5		100	100
	BW400R	100	80	100	80	80	40	5	0	20	10		100	100
	BW400H	100	80	100	80	80	40	5	0	20	10		100	100
630A	BW630E	100	80	100	80	80	40	0	0	10	5		100	100
	BW630R	100	80	100	80	80	40	5	0	20	10		100	100
	BW630H	120	100	120	100	80	40	5	0	20	10		120	120
800A	BW800E	100	80	100	80	80	40	0	0	10	5		100	100
	BW800R	100	80	100	80	80	40	5	0	20	10		100	100
	BW800H	120	100	120	100	80	40	5	0	20	20		120	120

Downloaded from Arrow.com.

■ Dimensions, mm

● Front mounting, front connection

BW32□-2P, BW50□-2P

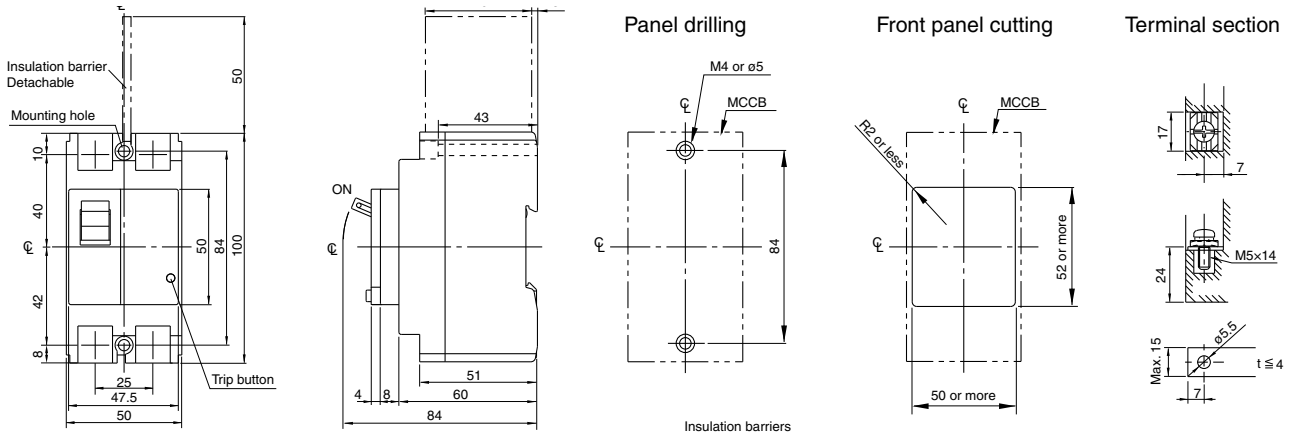

Insulation barriers
Standard provided: BW50SAG, BW50RAG
Optional: BW32AAG, BW32SAG, BW50EAG

BW32□-3P, BW50□-3P

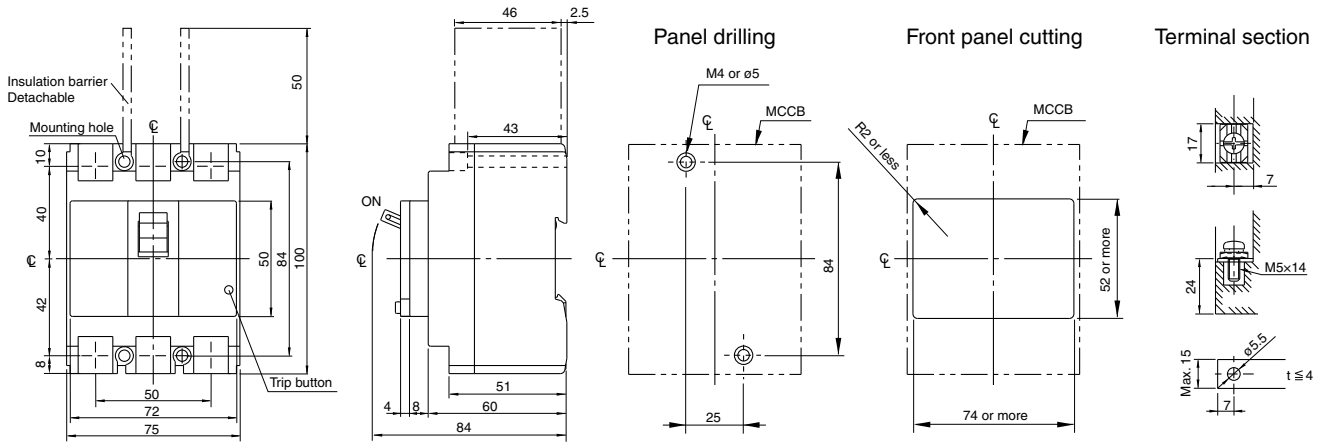

Insulation barriers
Standard provided: BW50SAG, BW50RAG
Optional: BW32AAG, BW32SAG, BW50EAG

BW63□-2P

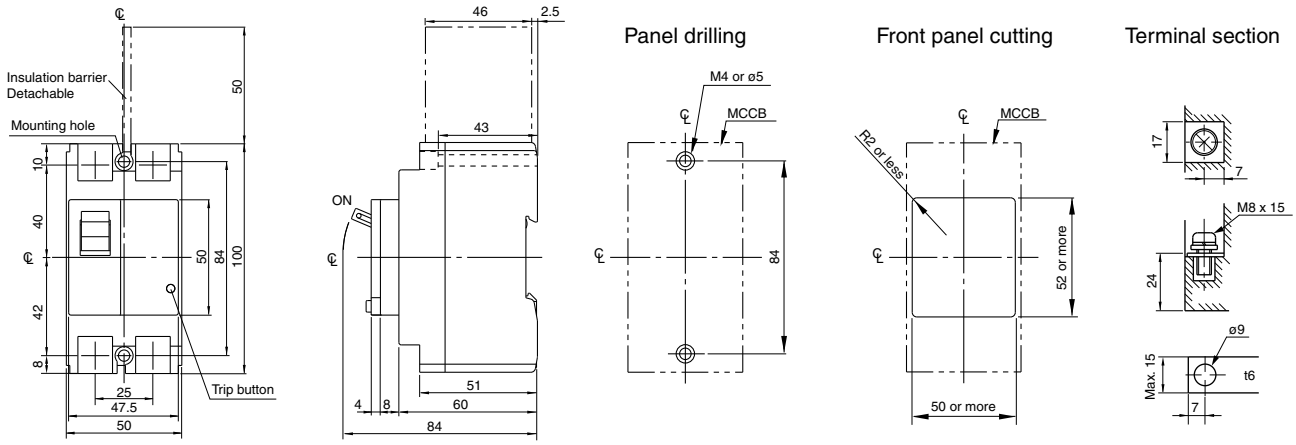

Downloaded from Arrow.com.

■ Dimensions, mm

● Front mounting, front connection

BW63□-3P

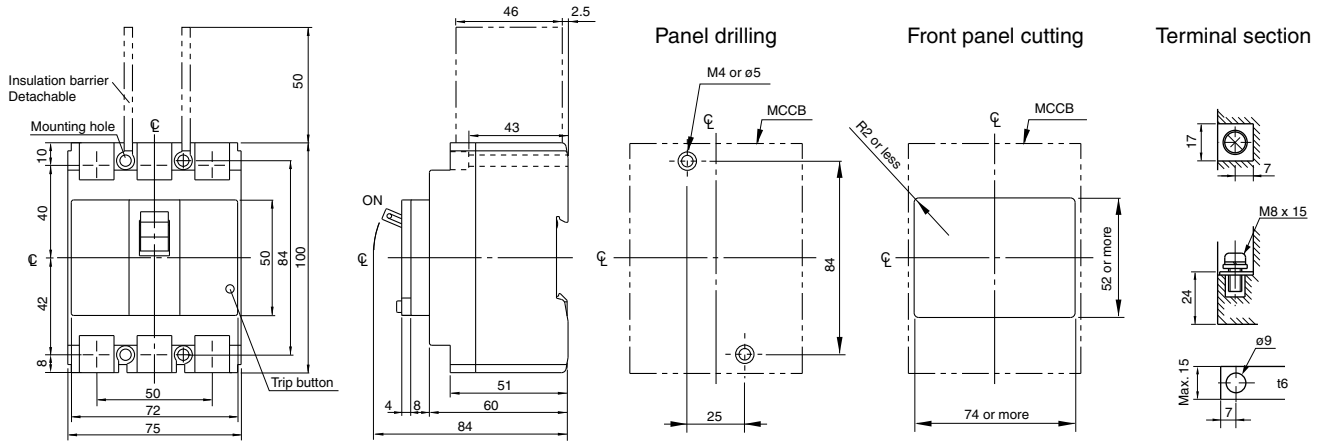

BW100□-2P

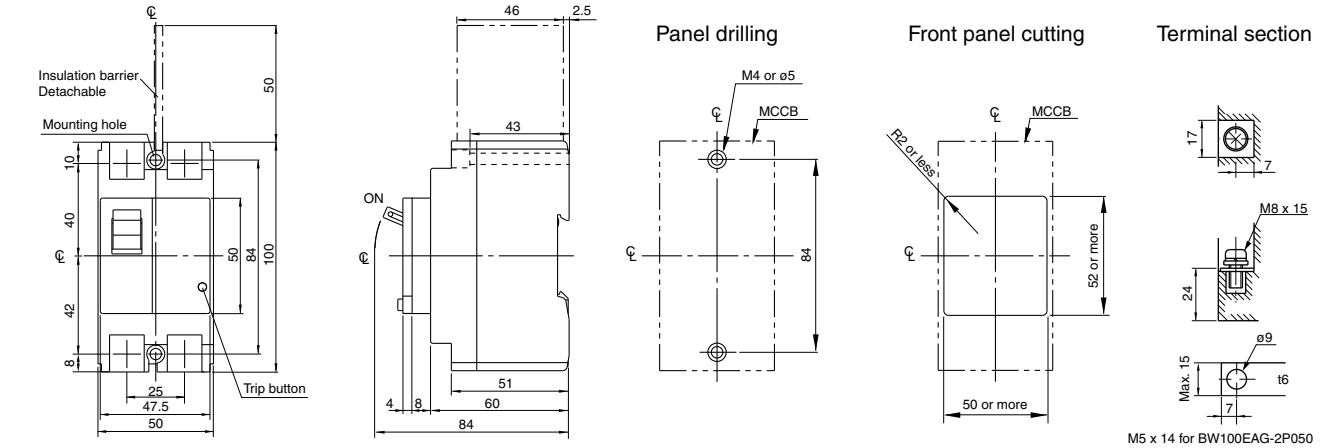

BW100□-3P

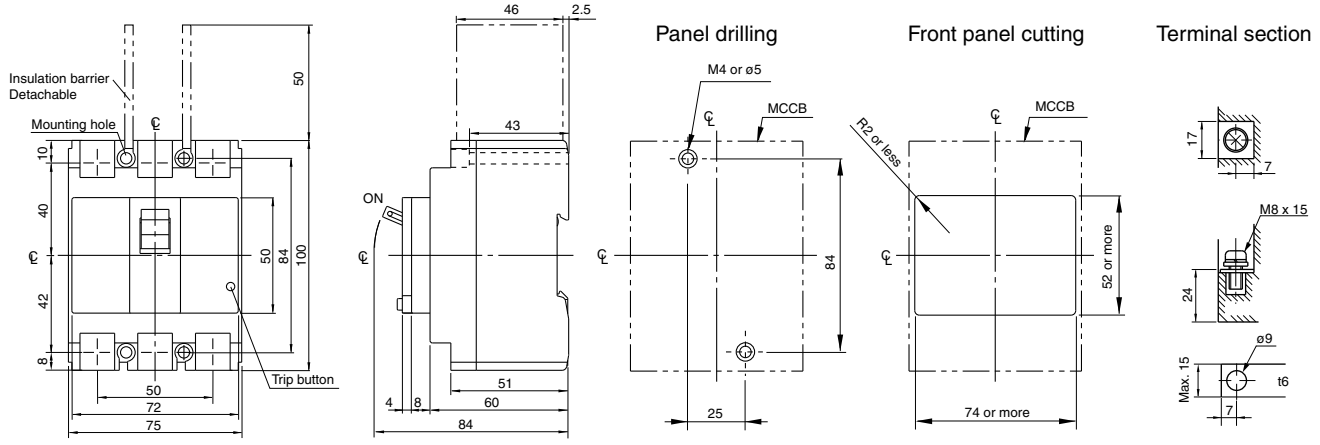

Insulation barriers
Standard provided: BW100EAG
Optional: BW100AAG

Downloaded from Arrow.com.

■ Dimensions, mm

● Front mounting, front connection

BW125JAG-2P

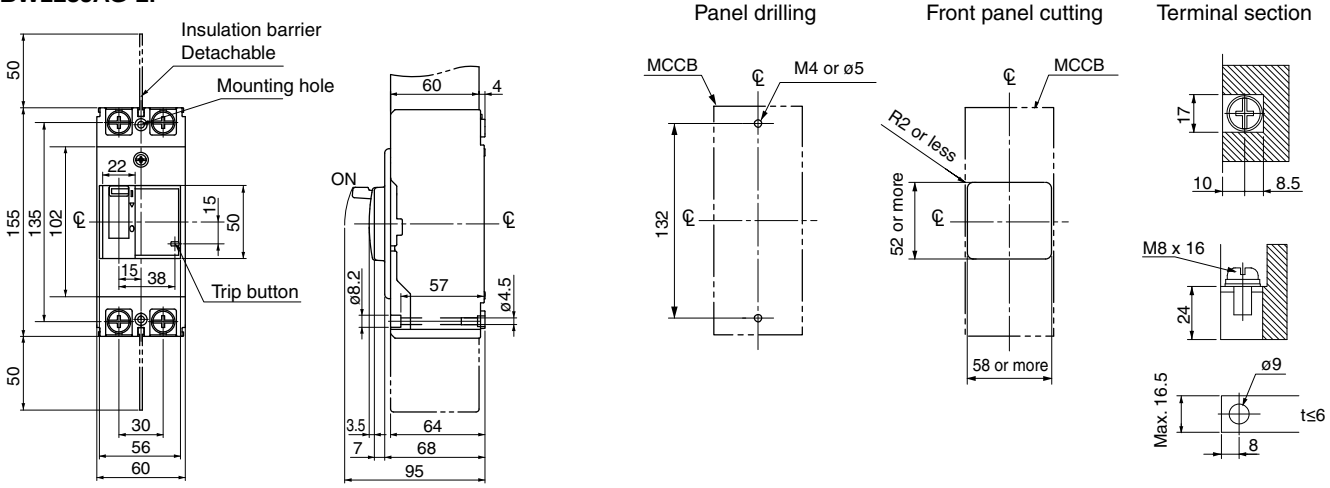

BW50HAG-2P, 3P, BW125JAG-3P,
BW125SAG-2P, 3P, BW125RAG-2P, 3P
BW125HAG-2P, 3P

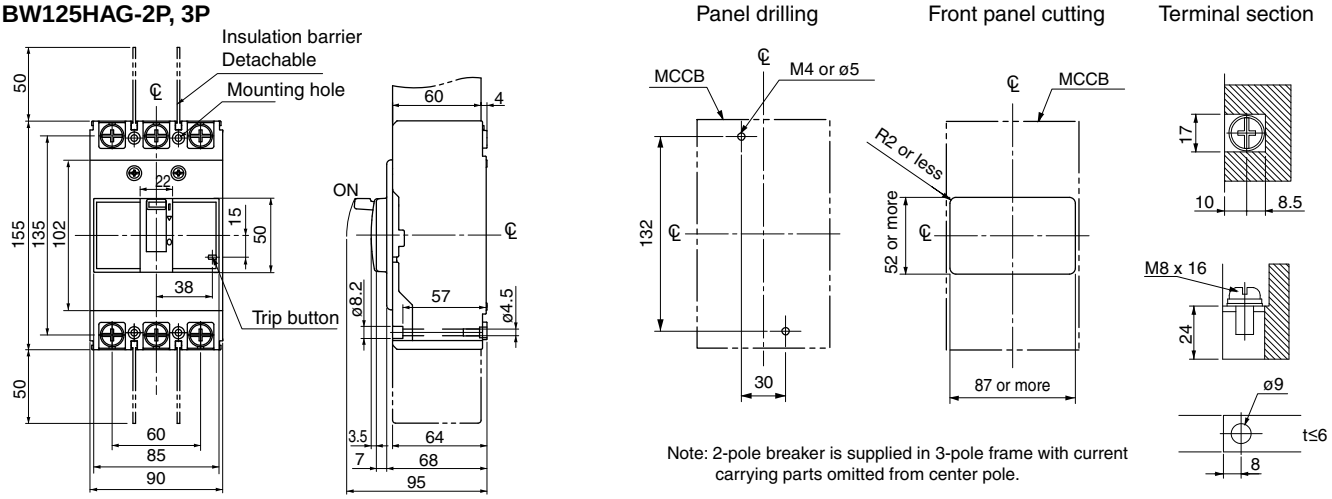

Note: 2-pole breaker is supplied in 3-pole frame with current carrying parts omitted from center pole.

BW125JAG-4P
BW125SAG-4P
BW125RAG-4P

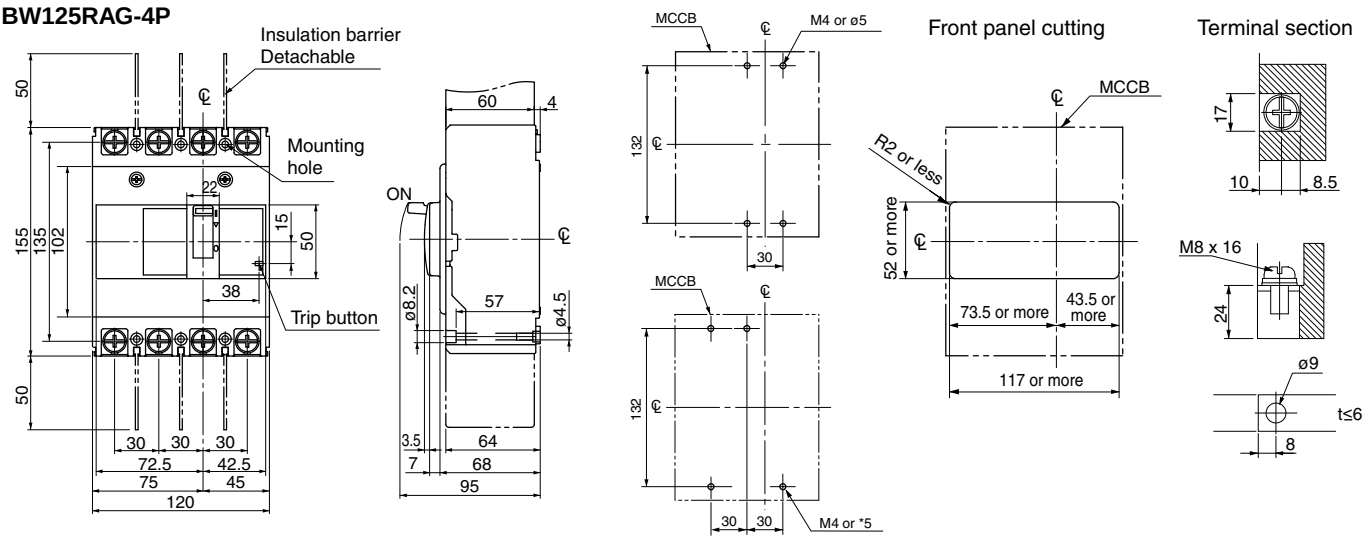

For V, N-type hadle

Downloaded from Arrow.com.

■ Dimensions, mm

● Front mounting, front connection

BW160□-2P, 3P
BW250□-2P, 3P

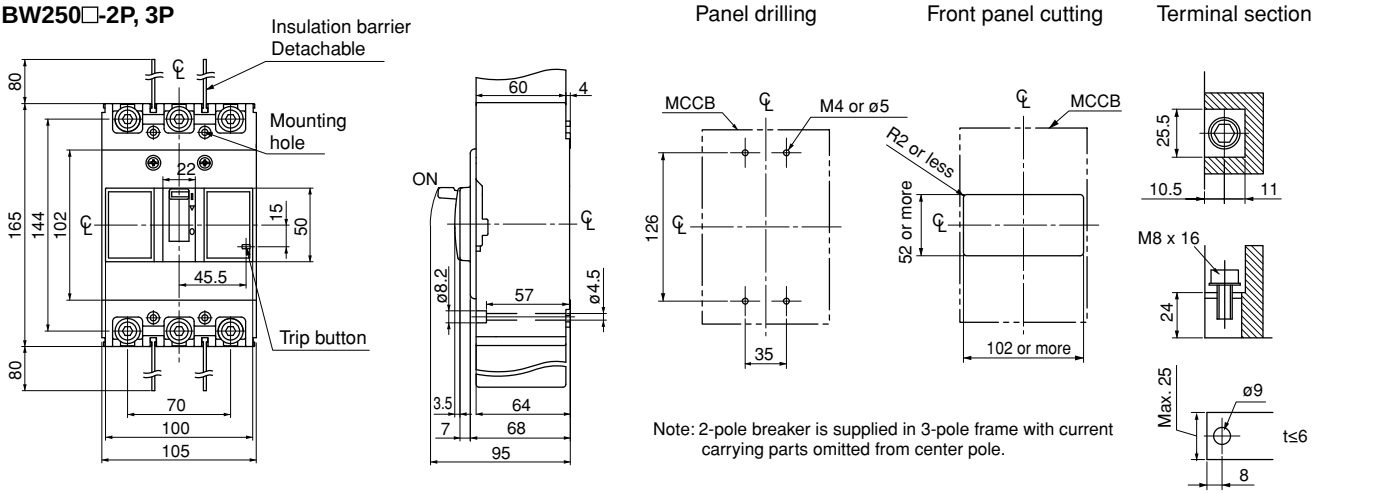

Note: 2-pole breaker is supplied in 3-pole frame with current carrying parts omitted from center pole.

BW160□-4P
BW250□-4P

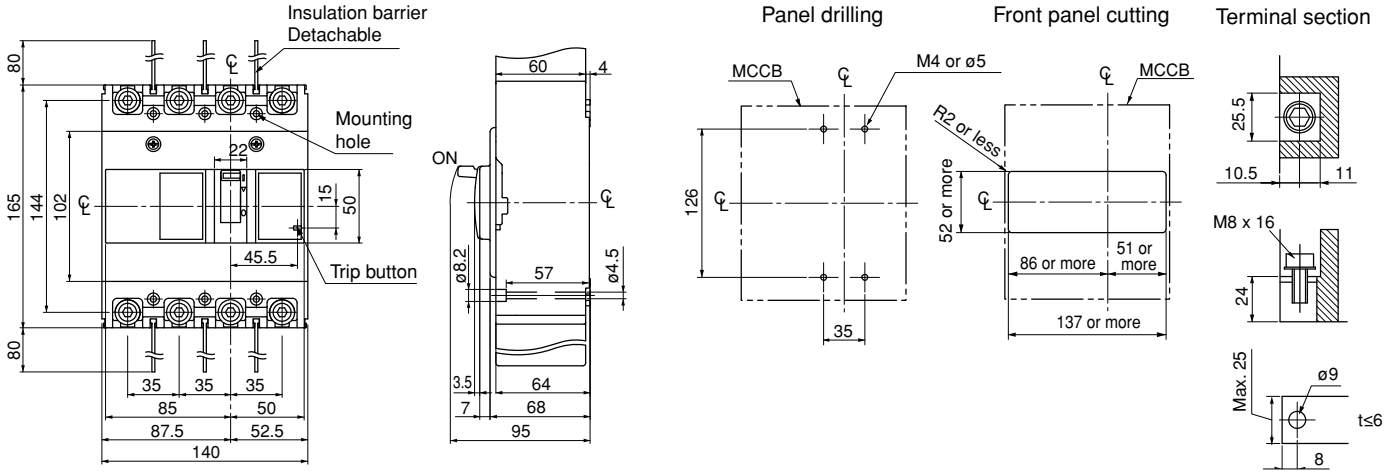

Downloaded from Arrow.com.

■ **Dimensions, mm**

● **Front mounting, front connection**

BW400□-2P, 3P

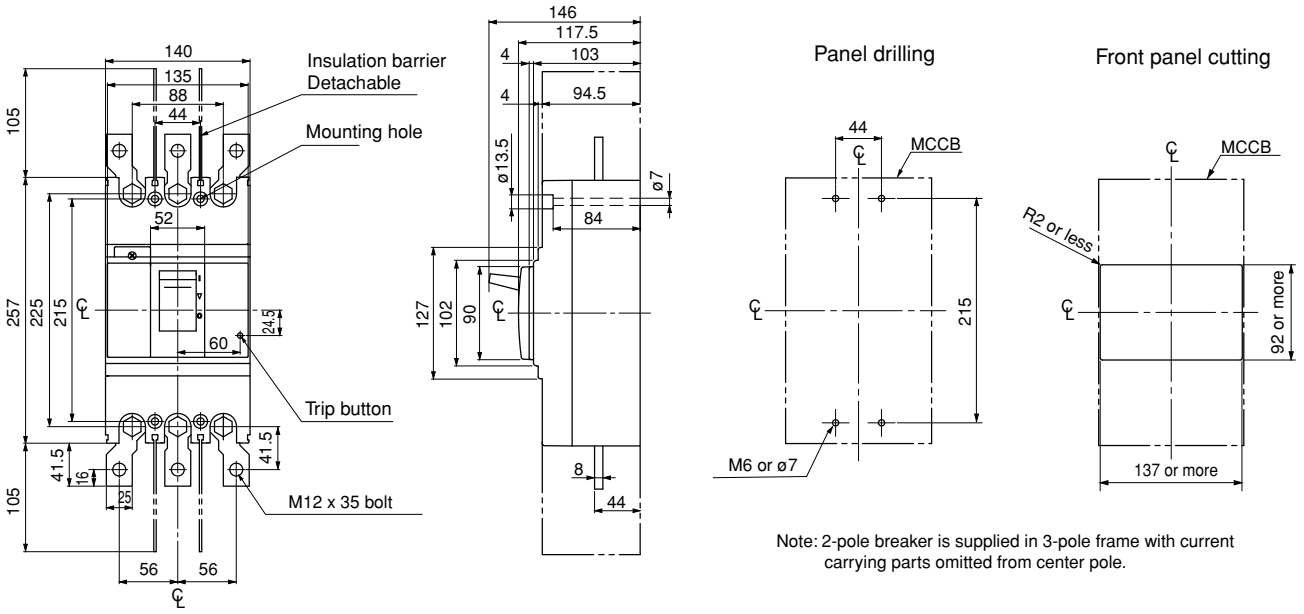

Note: 2-pole breaker is supplied in 3-pole frame with current carrying parts omitted from center pole.

06

BW400□-4P

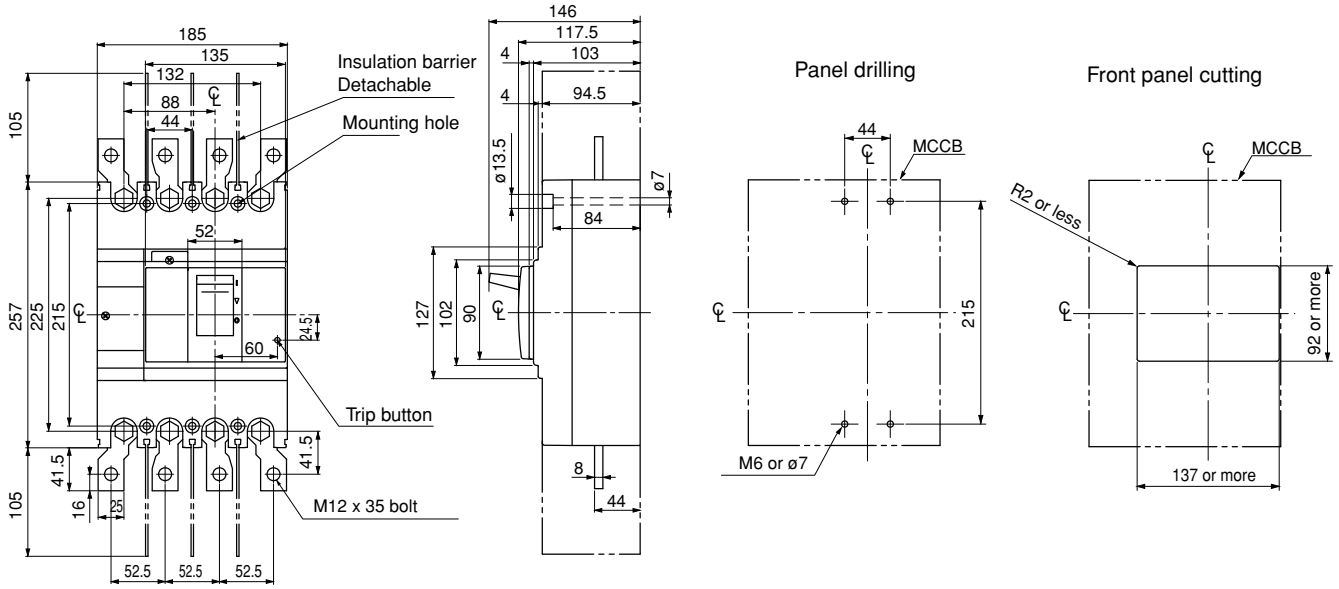

Downloaded from Arrow.com.

■ **Dimensions, mm**

● **Front mounting, front connection**

BW630□-3P

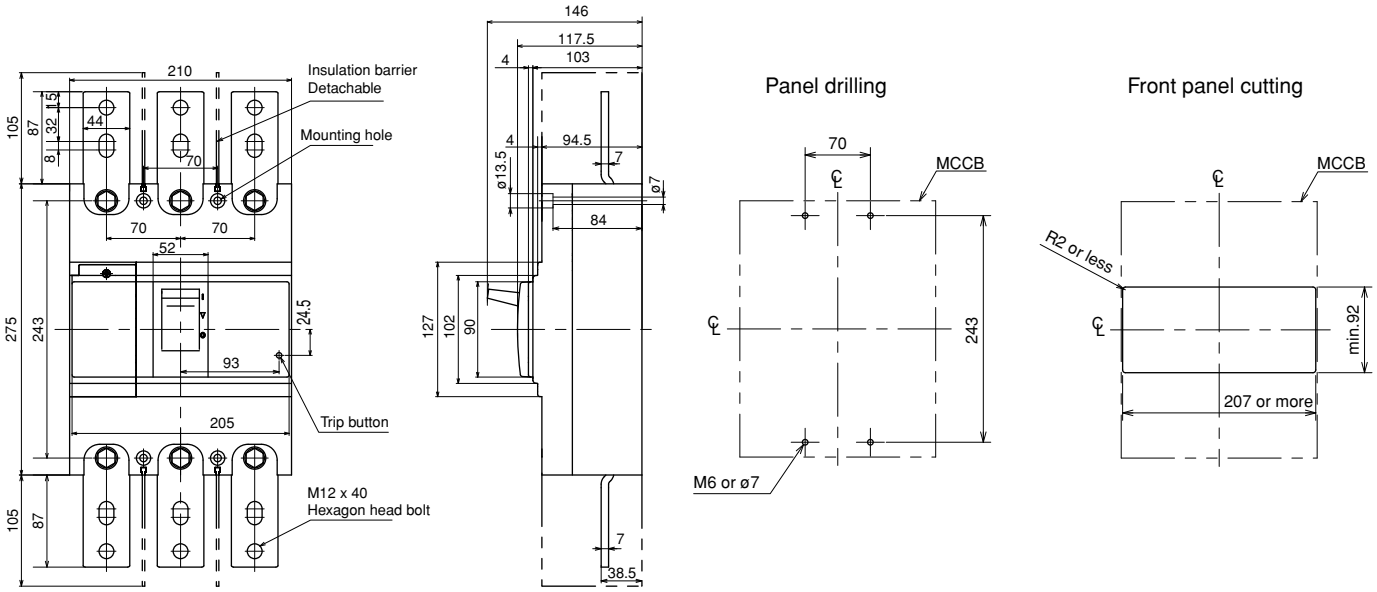

BW630□-4P

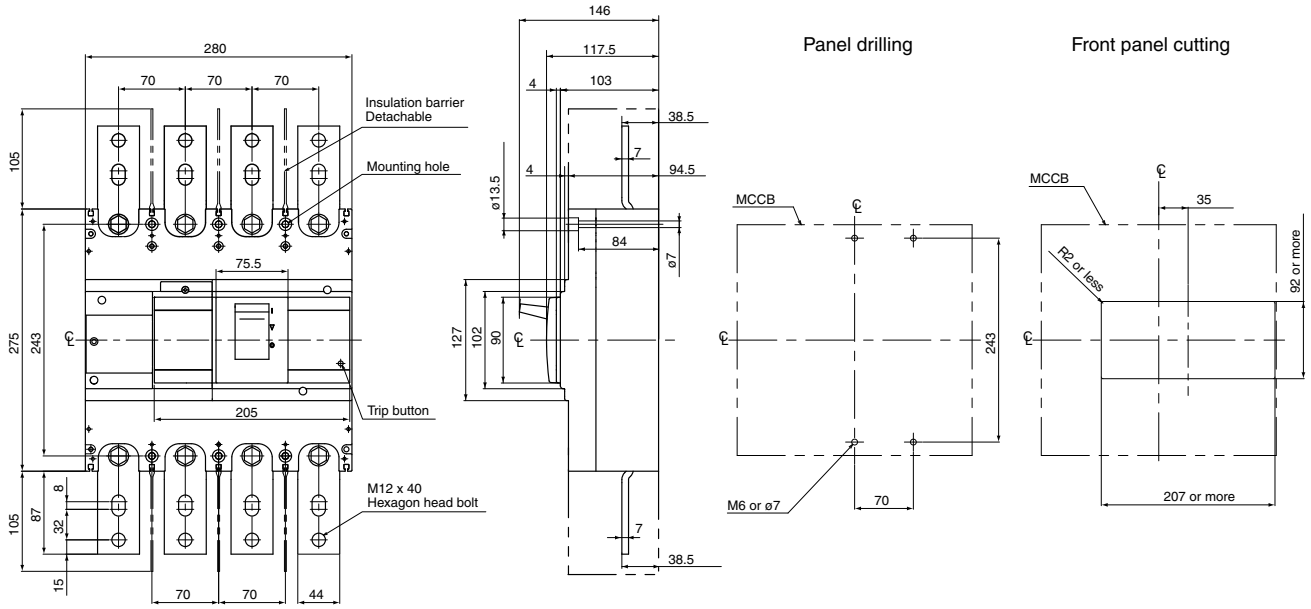

Downloaded from Arrow.com.

■ Dimensions, mm

● Front mounting, front connection

BW800□-3P

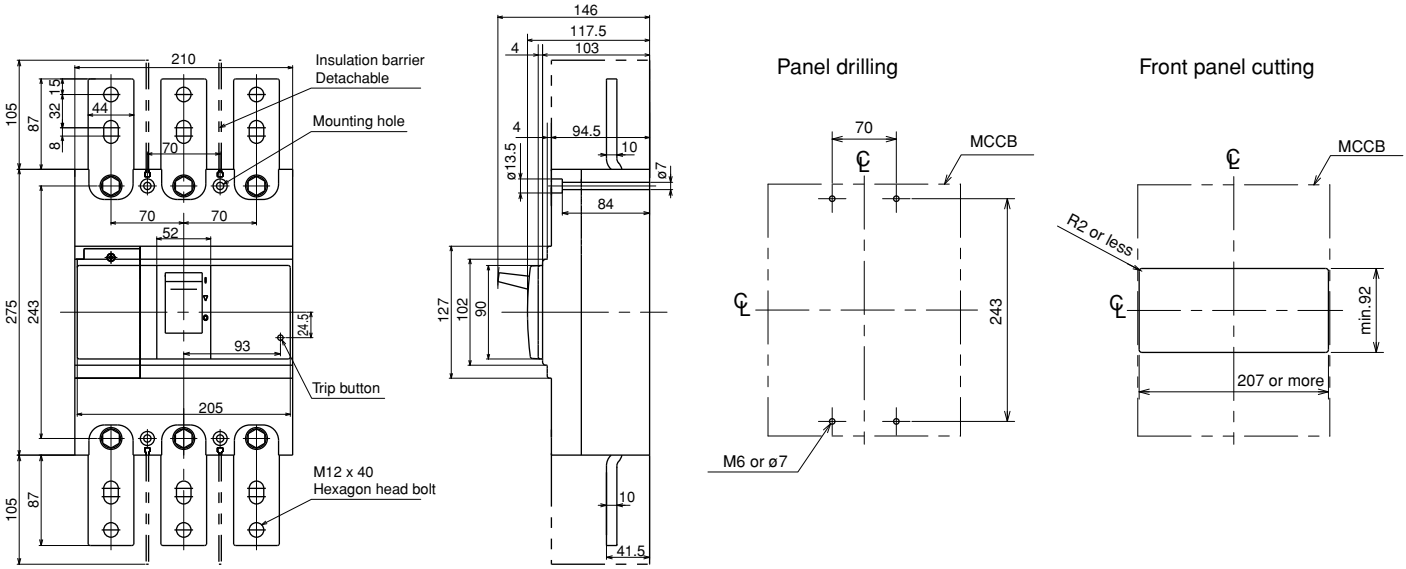

06

BW800□-4P

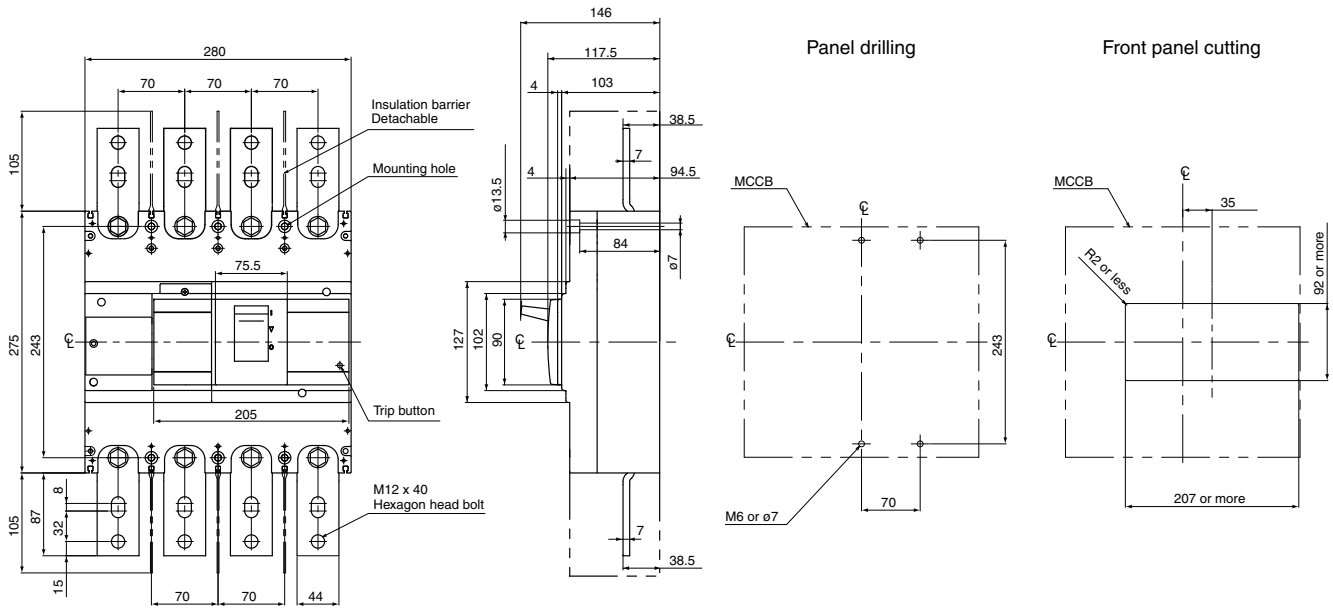

Downloaded from Arrow.com.

■ Dimensions, mm

● Front mounting, rear connection (type X)

BW32□-2P, BW50□-2P

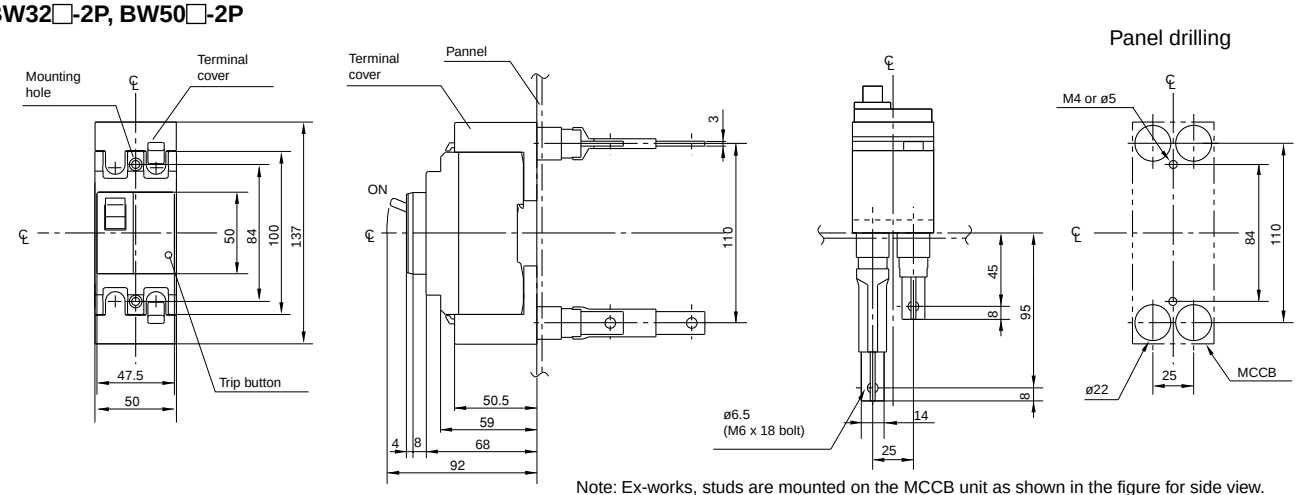

Note: Ex-works, studs are mounted on the MCCB unit as shown in the figure for side view.
•Studs for line side terminal : Mounted horizontally.
•Studs for load-side terminal : Mounted vertically.
Each stud can be turned by 90˚.

BW32□-3P, BW50□-3P

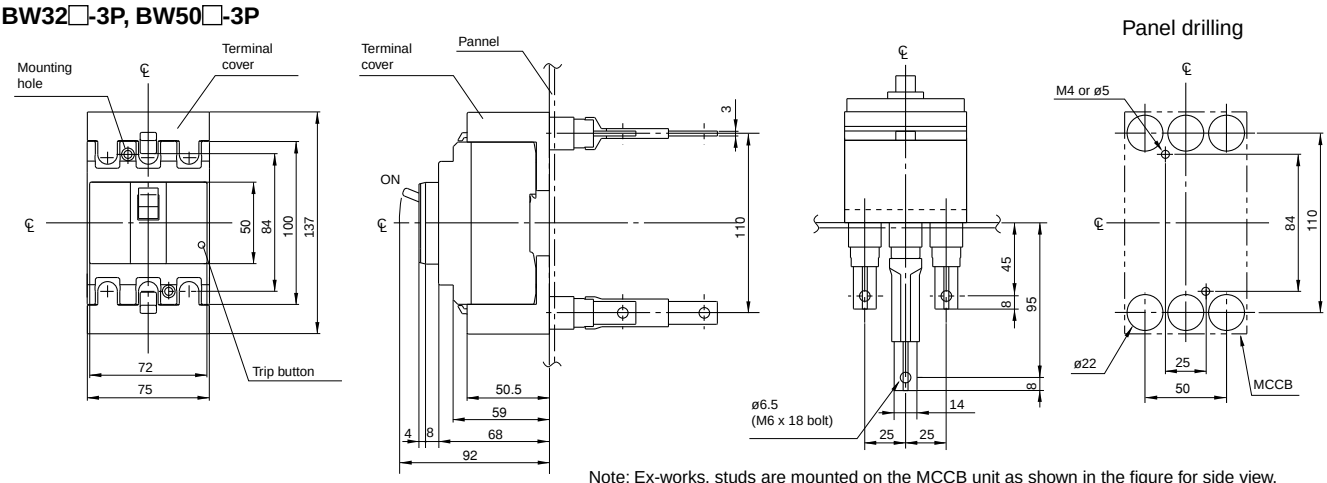

Note: Ex-works, studs are mounted on the MCCB unit as shown in the figure for side view.
•Studs for line side terminal : Mounted horizontally.
•Studs for load-side terminal : Mounted vertically.
Each stud can be turned by 90˚.
2-pole breaker is supplied in 3-pole frame with current carrying parts omitted from center pole.

BW63□-2P

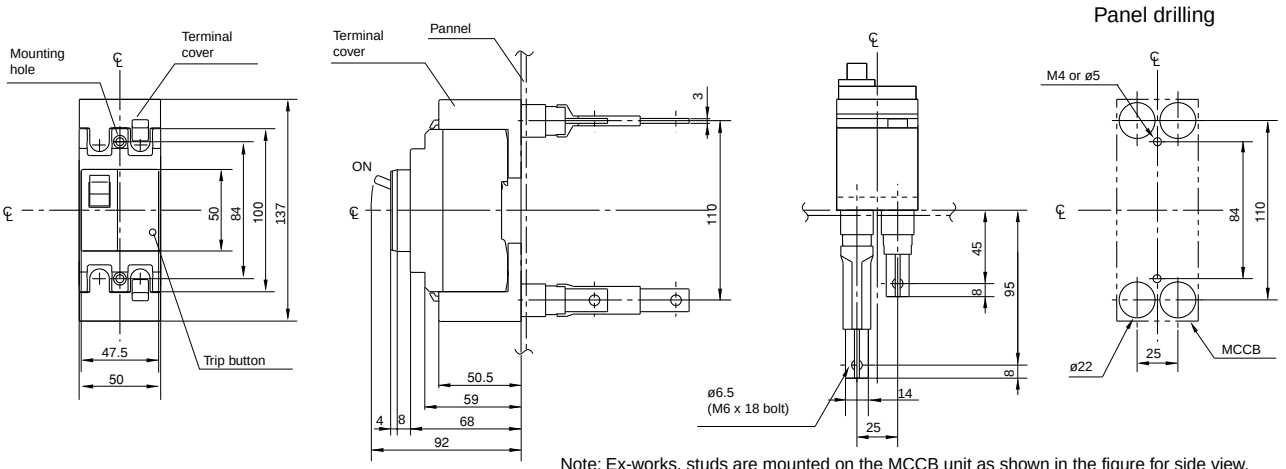

Note: Ex-works, studs are mounted on the MCCB unit as shown in the figure for side view.
•Studs for line side terminal : Mounted horizontally.
•Studs for load-side terminal : Mounted vertically.
Each stud can be turned by 90˚.

Downloaded from Arrow.com.

■ Dimensions, mm

● Front mounting, rear connection (type X)

BW63□-3P

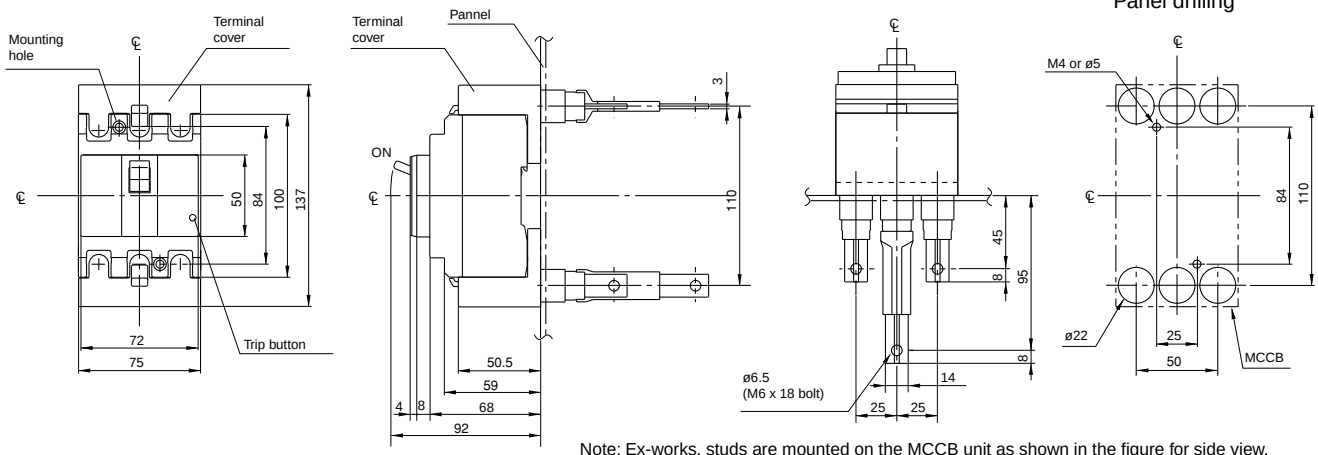

Note: Ex-works, studs are mounted on the MCCB unit as shown in the figure for side view.
•Studs for line side terminal : Mounted horizontally.
•Studs for load-side terminal : Mounted vertically.
Each stud can be turned by 90˚.
2-pole breaker is supplied in 3-pole frame with current carrying parts omitted from center pole.

BW100□-2P

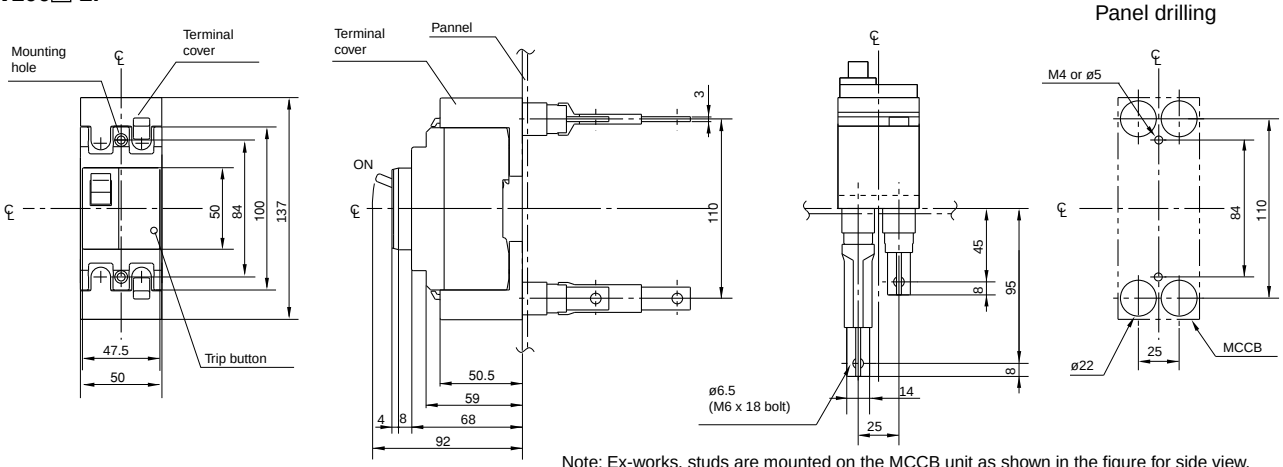

Note: Ex-works, studs are mounted on the MCCB unit as shown in the figure for side view.
•Studs for line side terminal : Mounted horizontally.
•Studs for load-side terminal : Mounted vertically.
Each stud can be turned by 90˚.

BW100□-3P

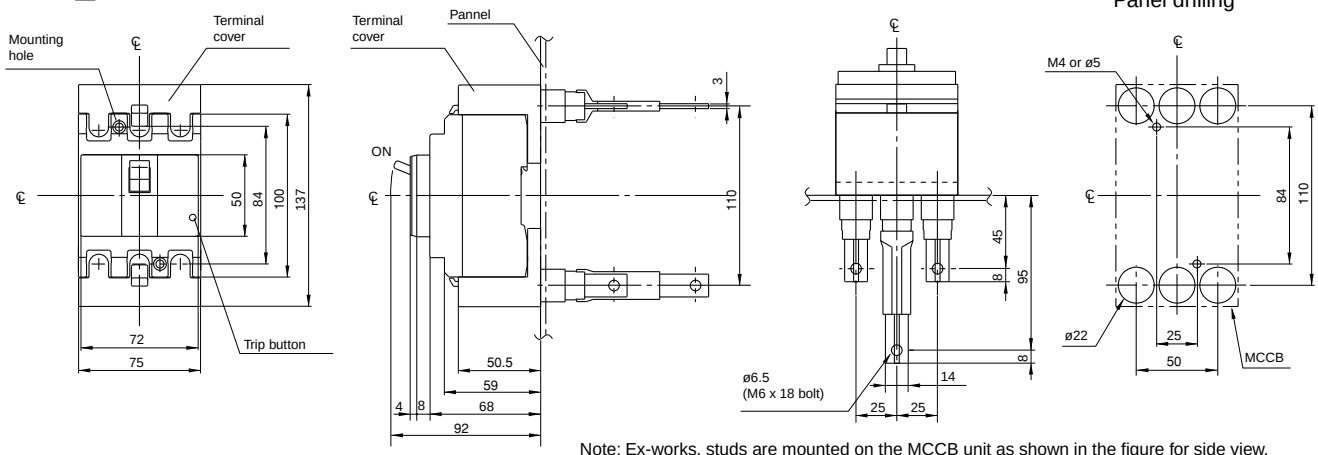

Note: Ex-works, studs are mounted on the MCCB unit as shown in the figure for side view.
•Studs for line side terminal : Mounted horizontally.
•Studs for load-side terminal : Mounted vertically.
Each stud can be turned by 90˚.
2-pole breaker is supplied in 3-pole frame with current carrying parts omitted from center pole.

Downloaded from Arrow.com.

■ Dimensions, mm

● Front mounting, rear connection (type X)

BW125JAG-2P

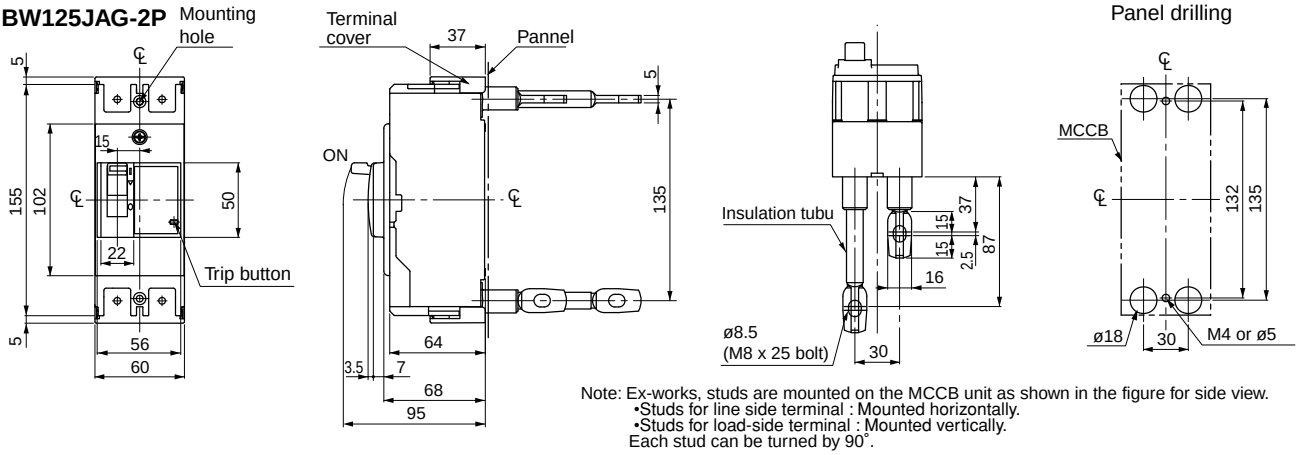

Note: Ex-works, studs are mounted on the MCCB unit as shown in the figure for side view.
•Studs for line side terminal : Mounted horizontally.
•Studs for load-side terminal : Mounted vertically.
Each stud can be turned by 90˚.

BW50HAG-2P, 3P, BW125JAG-3P
BW125SAG-2P, 3P, BW125RAG-2P, 3P
BW125HAG-2P, 3P

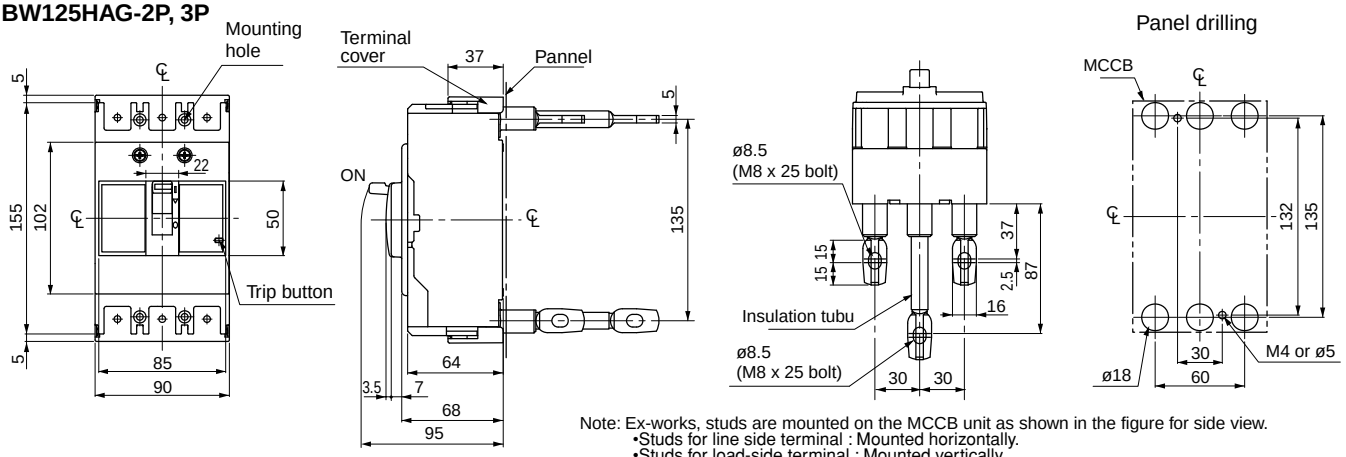

Note: Ex-works, studs are mounted on the MCCB unit as shown in the figure for side view.
•Studs for line side terminal : Mounted horizontally.
•Studs for load-side terminal : Mounted vertically.
Each stud can be turned by 90˚.
2-pole breaker is supplied in 3-pole frame with current carrying parts omitted from center pole.

BW125JAG-4P
BW125SAG-4P
BW125RAG-4P

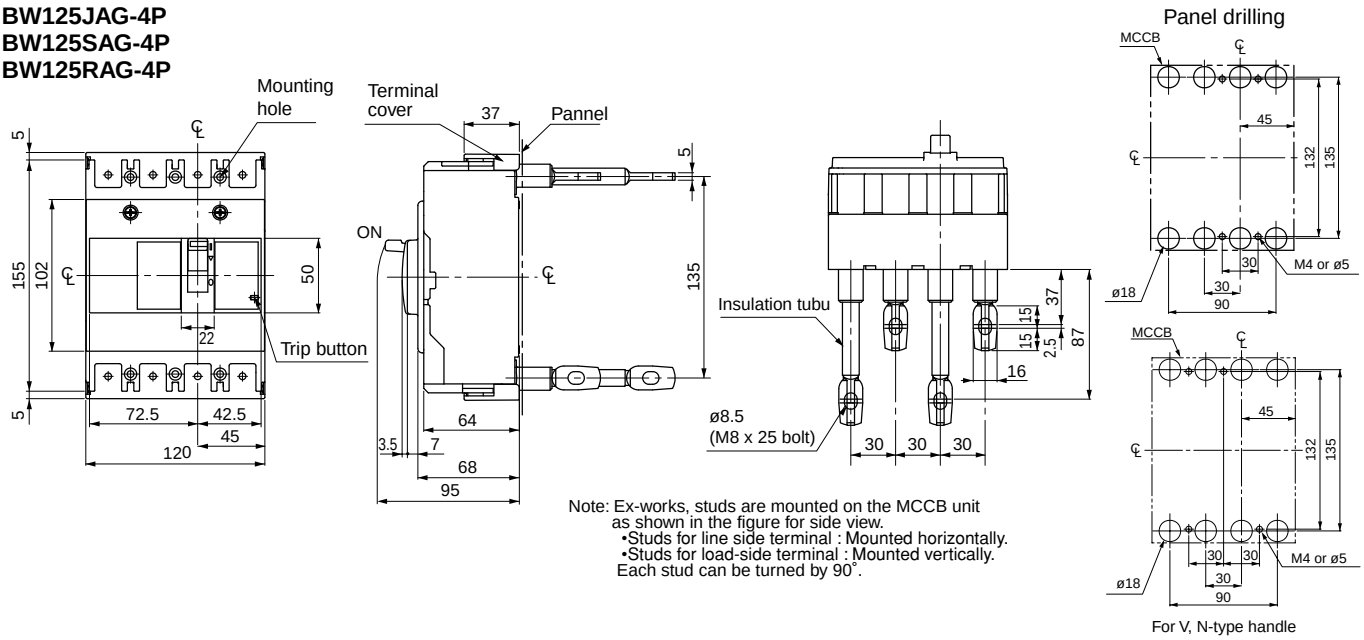

Note: Ex-works, studs are mounted on the MCCB unit as shown in the figure for side view.
•Studs for line side terminal : Mounted horizontally.
•Studs for load-side terminal : Mounted vertically.
Each stud can be turned by 90˚.

For V, N-type handle

Downloaded from Arrow.com.

■ Dimensions, mm

● Front mounting, rear connection (type X)

BW160□-2P, 3P
BW250□-2P, 3P

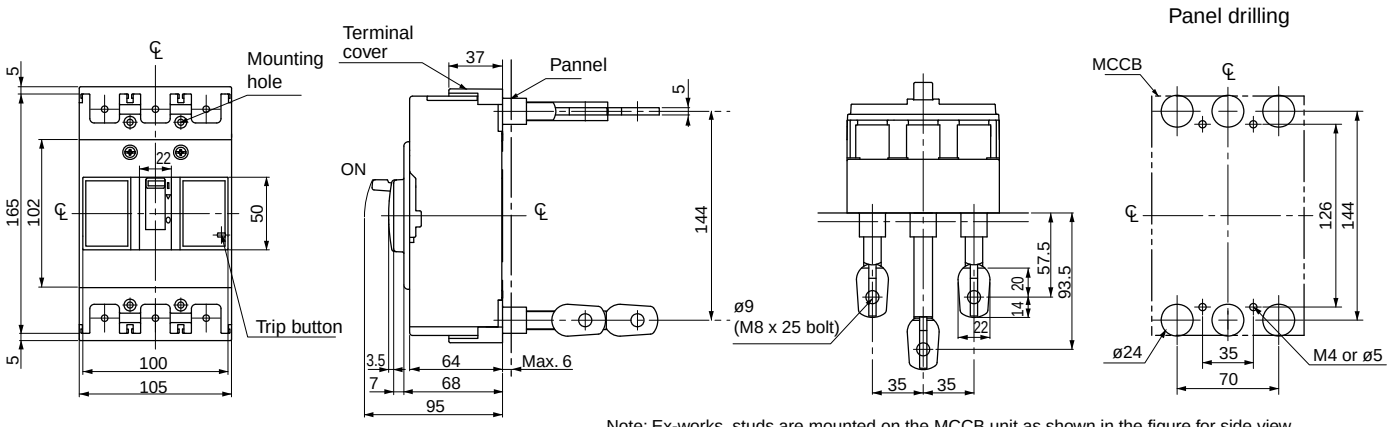

Note: Ex-works, studs are mounted on the MCCB unit as shown in the figure for side view.
•Studs for line side terminal : Mounted horizontally.
•Studs for load-side terminal : Mounted vertically.
Each stud can be turned by 90˚.
2-pole breaker is supplied in 3-pole frame with current carrying parts omitted from center pole.

BW160□-4P
BW250□-4P

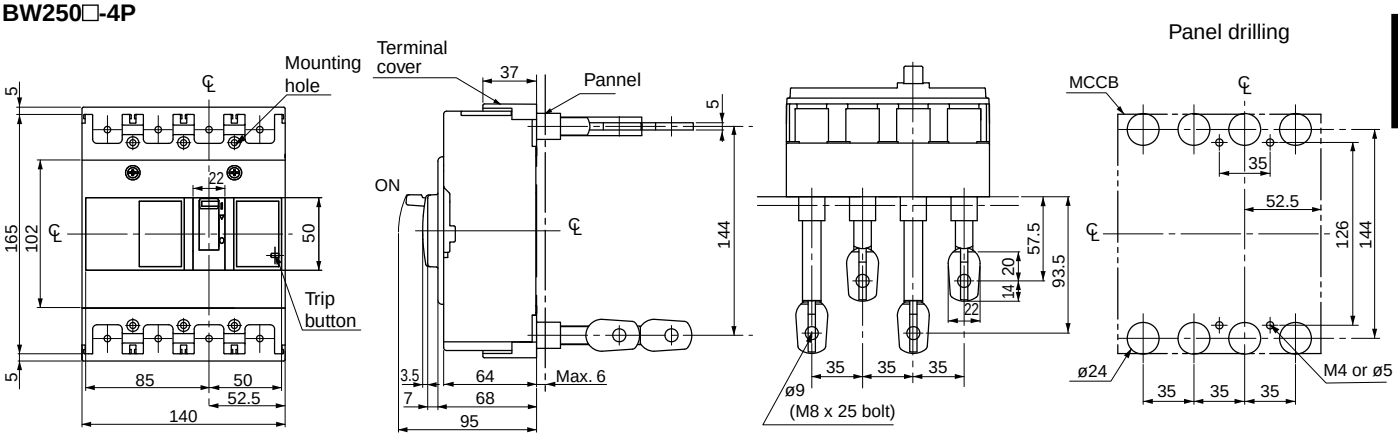

Note: Ex-works, studs are mounted on the MCCB unit as shown in the figure for side view.
•Studs for line side terminal : Mounted horizontally.
•Studs for load-side terminal : Mounted vertically.
Each stud can be turned by 90˚.

Downloaded from Arrow.com.

■ **Dimensions, mm**

● **Front mounting, rear connection (type X)**

BW400□-2P, 3P

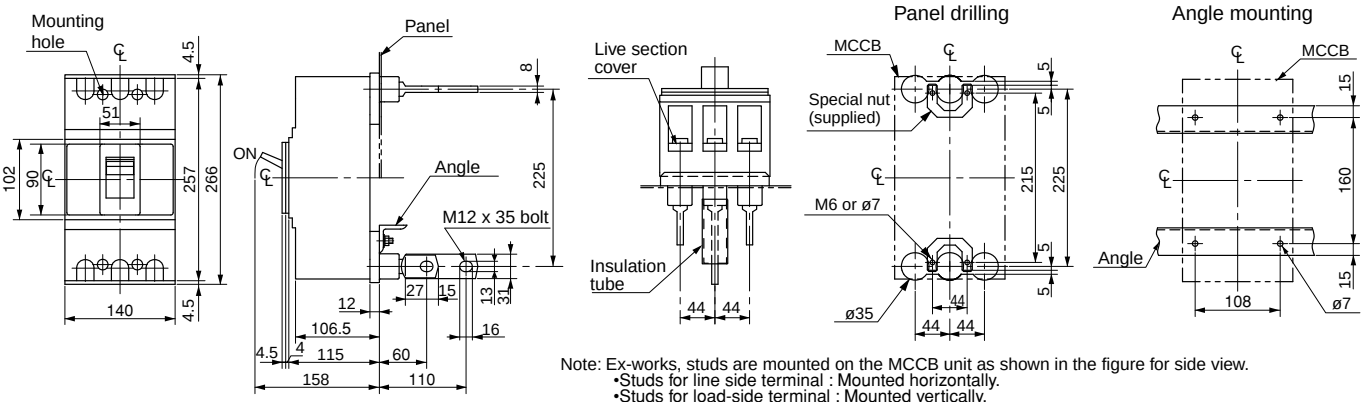

Note: Ex-works, studs are mounted on the MCCB unit as shown in the figure for side view.
•Studs for line side terminal : Mounted horizontally.
•Studs for load-side terminal : Mounted vertically.
Each stud can be turned by 90˚.
2-pole breaker is supplied in 3-pole frame with current carrying parts omitted from center pole.

BW400□-4P

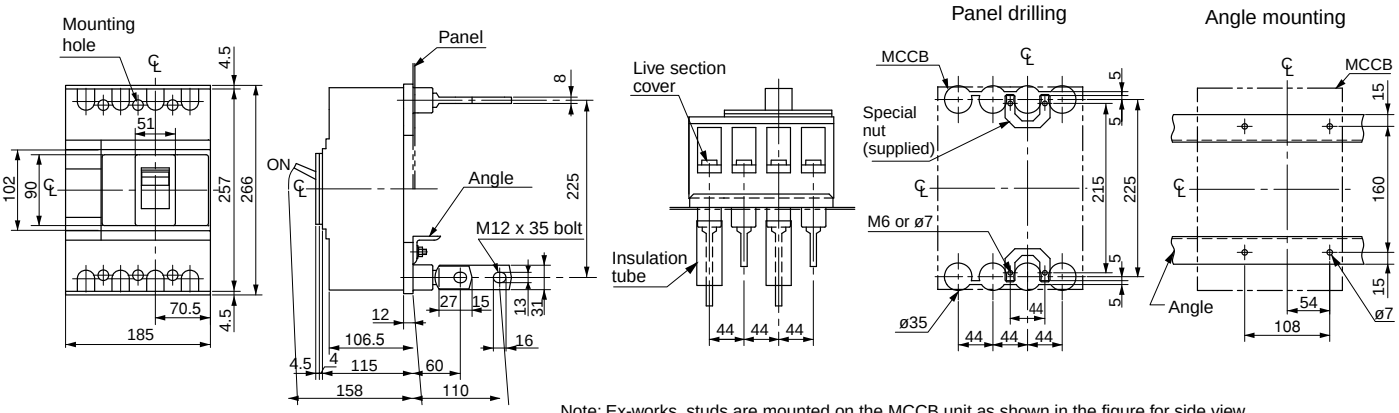

Note: Ex-works, studs are mounted on the MCCB unit as shown in the figure for side view.
•Studs for line side terminal : Mounted horizontally.
•Studs for load-side terminal : Mounted vertically.
Each stud can be turned by 90˚.

Downloaded from Arrow.com.

■ Dimensions, mm

● Front mounting, rear connection (type X)

BW630□-3P

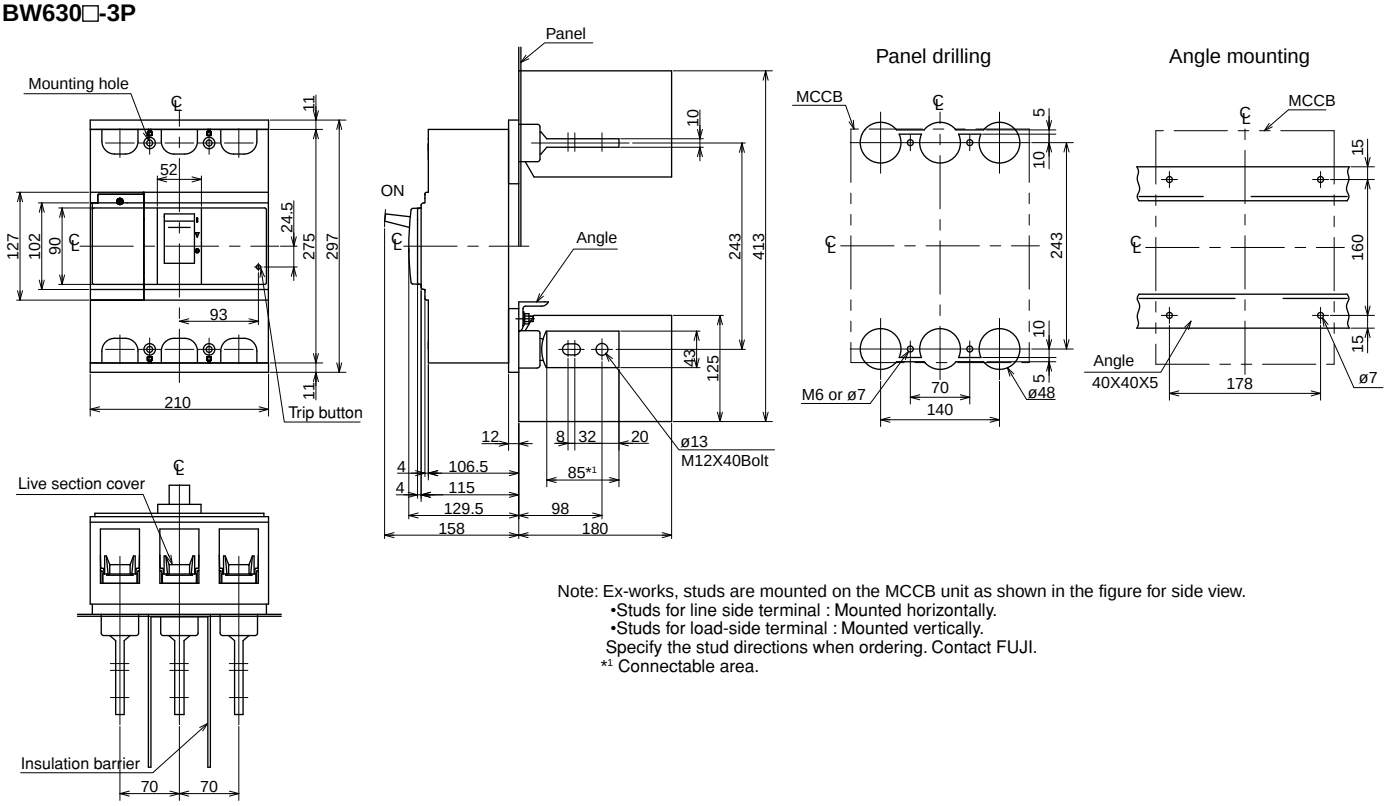

Note: Ex-works, studs are mounted on the MCCB unit as shown in the figure for side view.
•Studs for line side terminal : Mounted horizontally.
•Studs for load-side terminal : Mounted vertically.
Specify the stud directions when ordering. Contact FUJI.
*1 Connectable area.

06

BW630□-4P

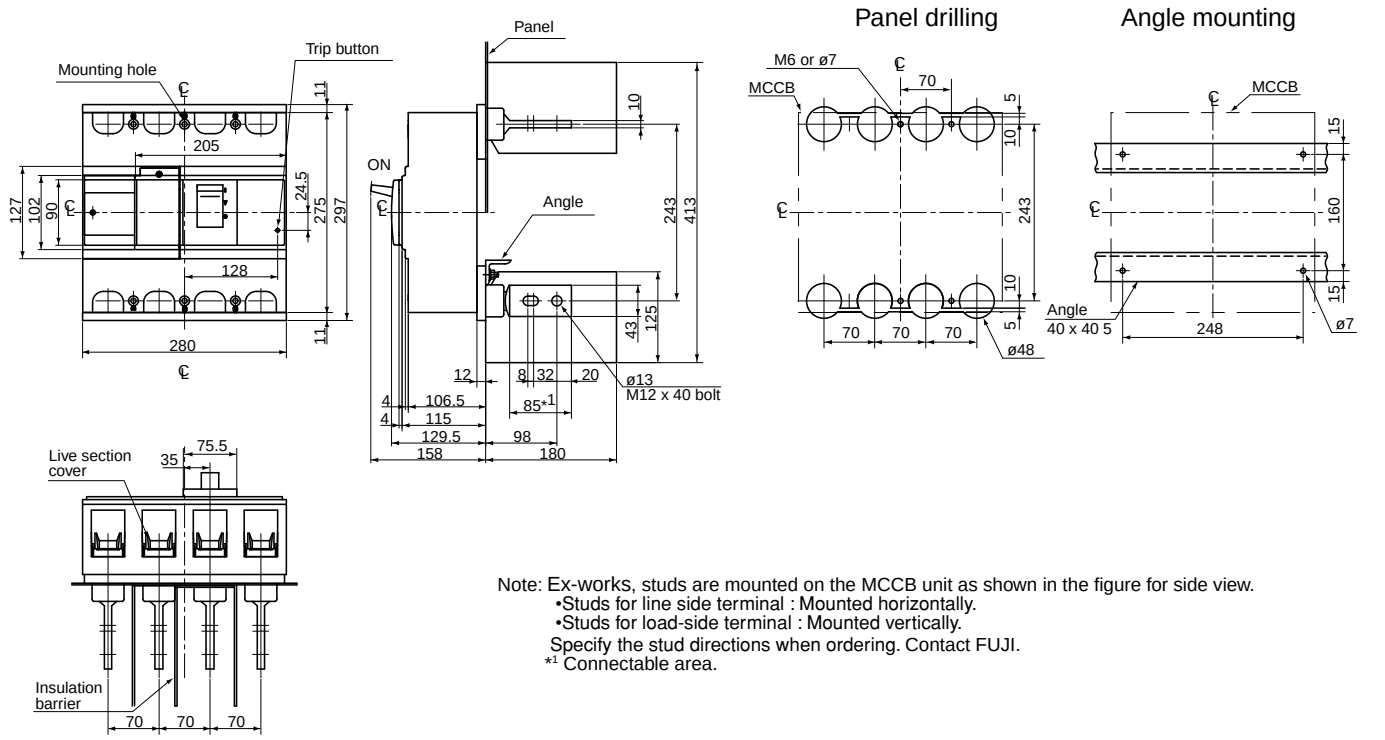

Note: Ex-works, studs are mounted on the MCCB unit as shown in the figure for side view.
•Studs for line side terminal : Mounted horizontally.
•Studs for load-side terminal : Mounted vertically.
Specify the stud directions when ordering. Contact FUJI.
*1 Connectable area.

Downloaded from Arrow.com.

■ Dimensions, mm

● Front mounting, rear connection (type X)

BW800□-3P

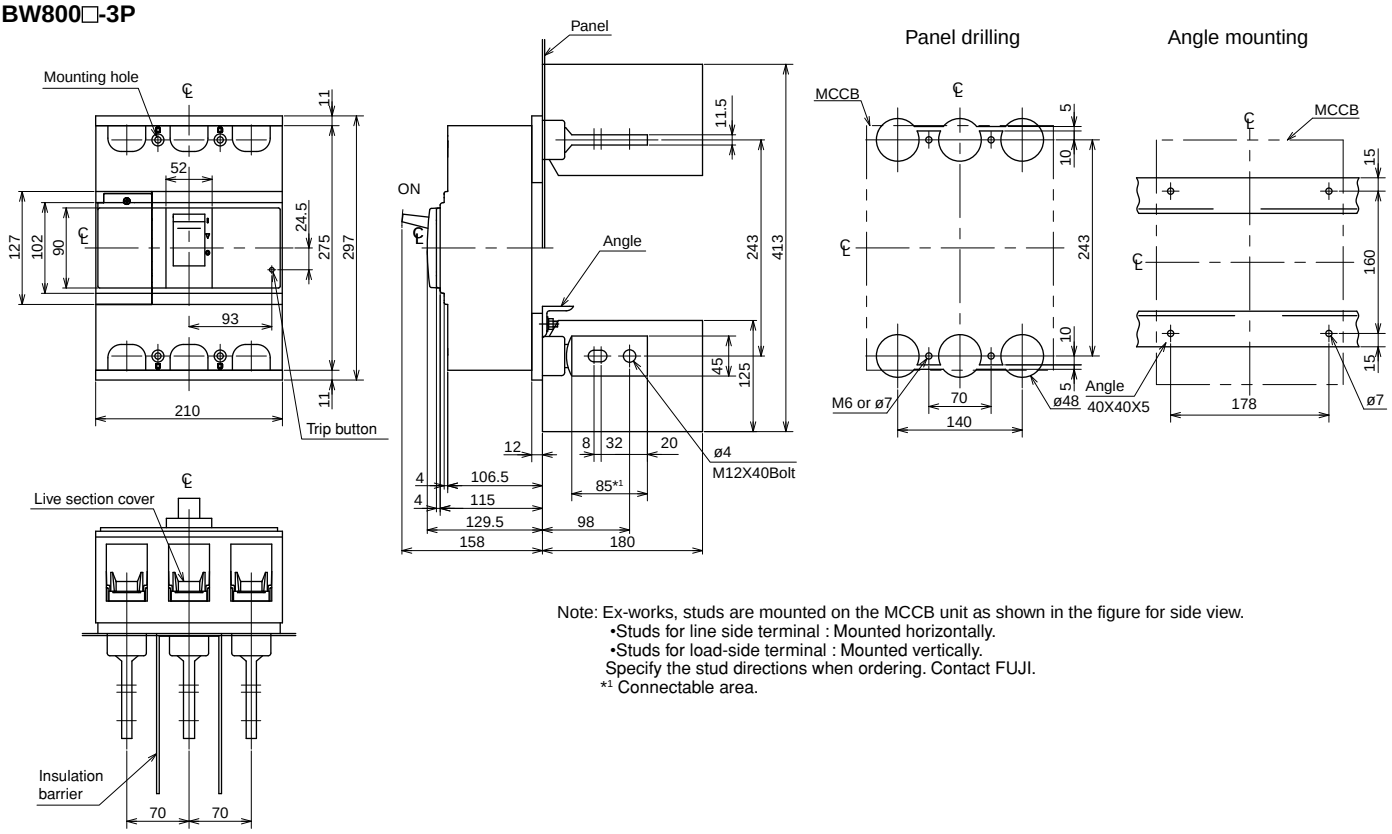

Note: Ex-works, studs are mounted on the MCCB unit as shown in the figure for side view.
•Studs for line side terminal : Mounted horizontally.
•Studs for load-side terminal : Mounted vertically.
Specify the stud directions when ordering. Contact FUJI.
*1 Connectable area.

BW800□-4P

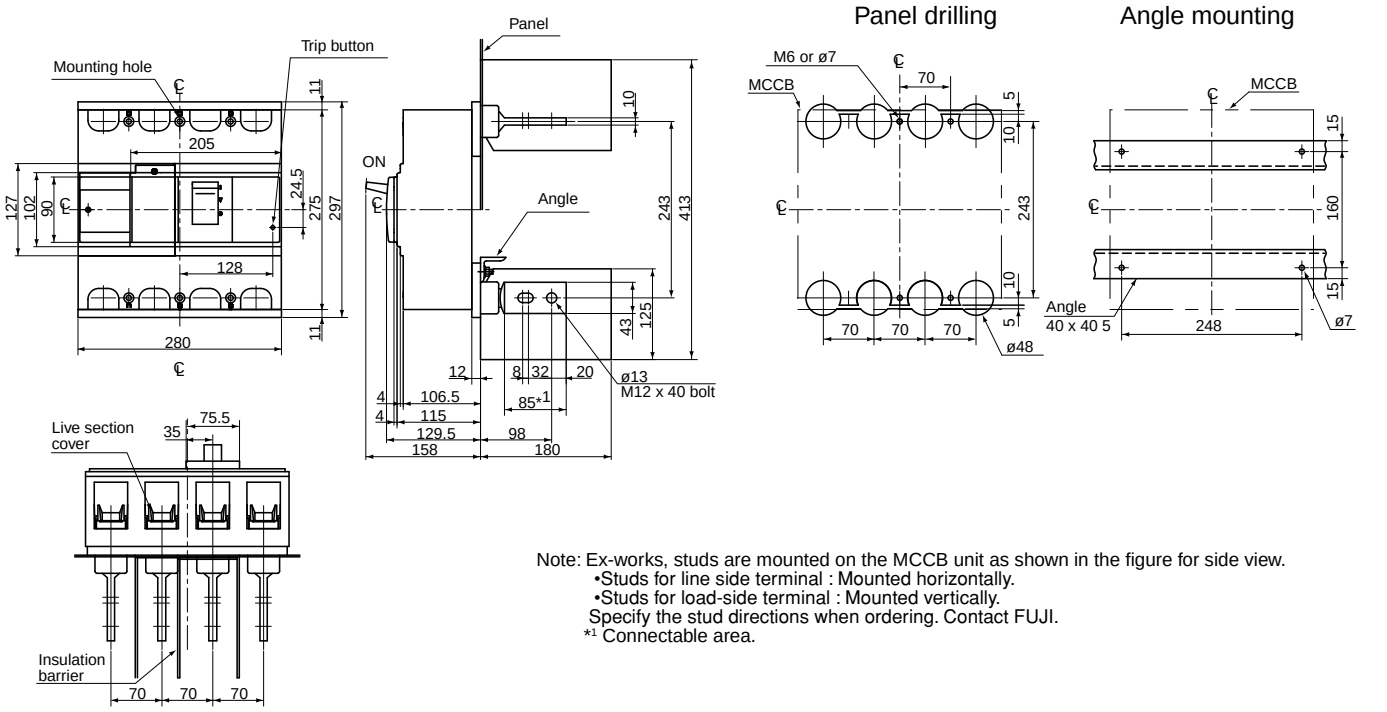

Note: Ex-works, studs are mounted on the MCCB unit as shown in the figure for side view.
•Studs for line side terminal : Mounted horizontally.
•Studs for load-side terminal : Mounted vertically.
Specify the stud directions when ordering. Contact FUJI.
*1 Connectable area.

Downloaded from Arrow.com.

■ Dimensions, mm

● Front mounting, front connection

BW50RAGU-2P

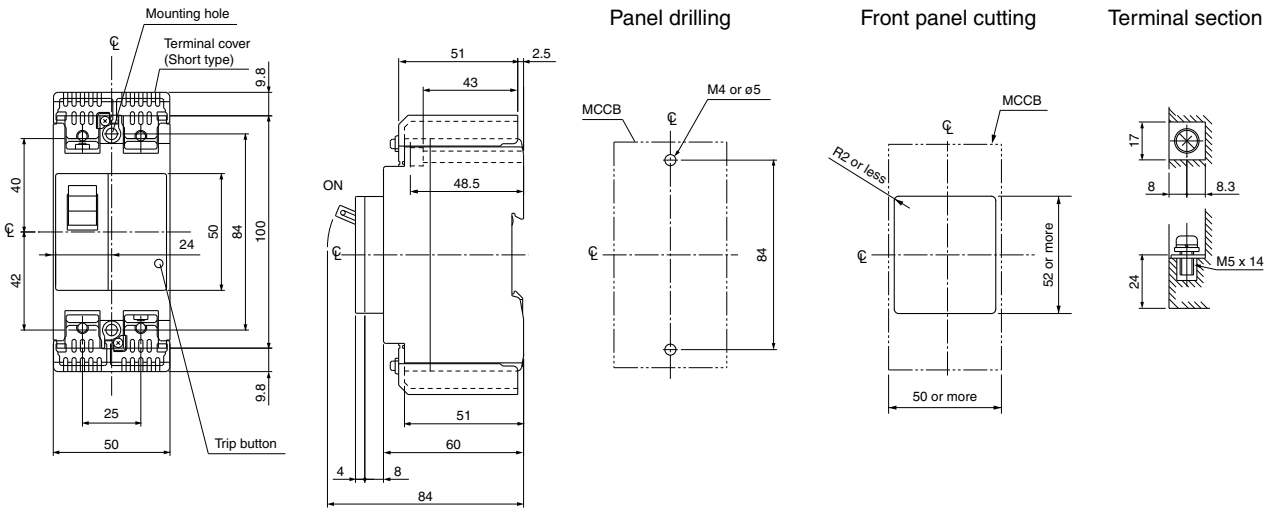

BW50RAGU-3P

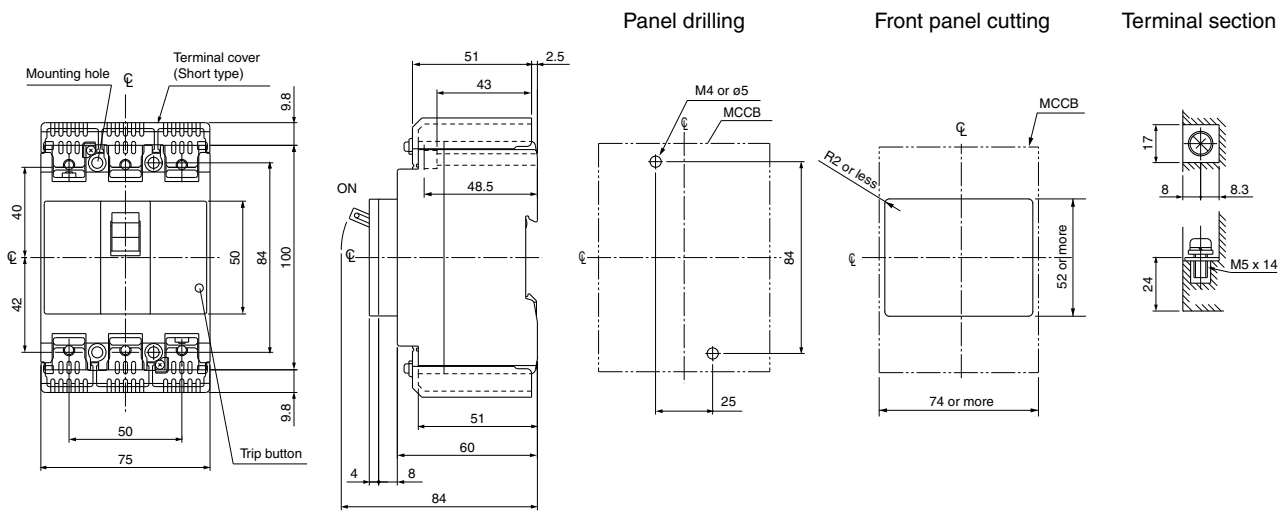

Downloaded from Arrow.com.

■ **Dimensions, mm**

● **Front mounting, front connection**

BW100EAGU-2P

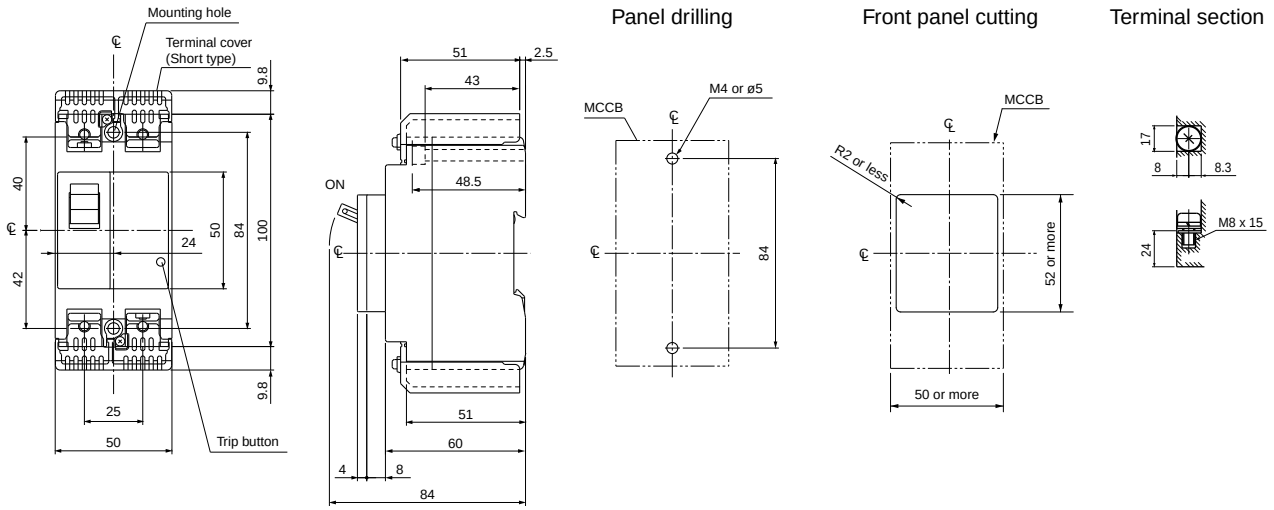

BW100EAGU-3P

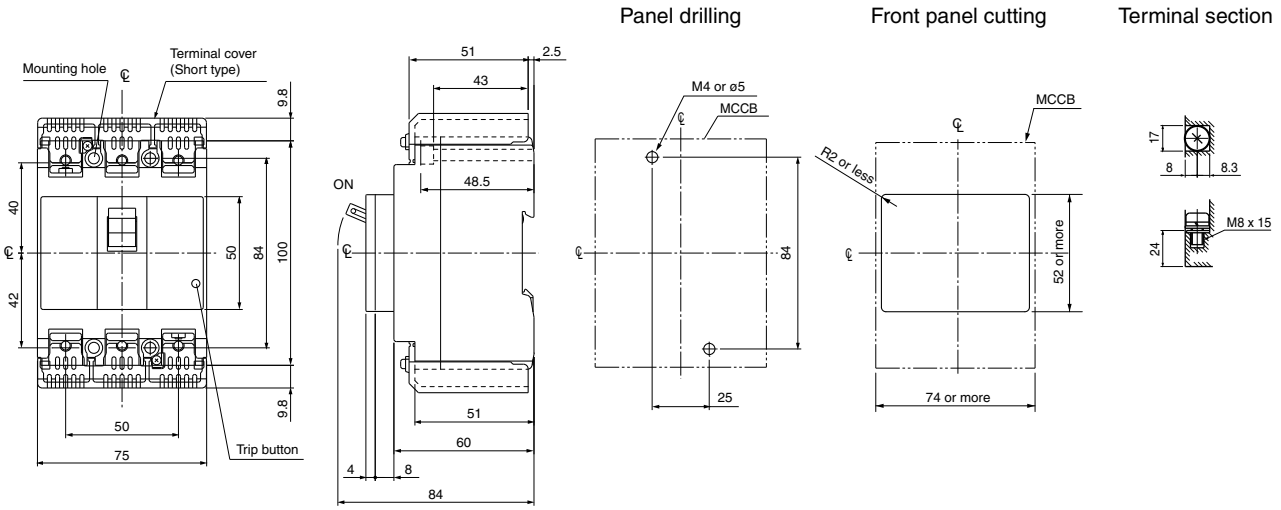

Downloaded from Arrow.com.

■ Dimensions, mm

● Front mounting, front connection

BW125□U-2P, 3P

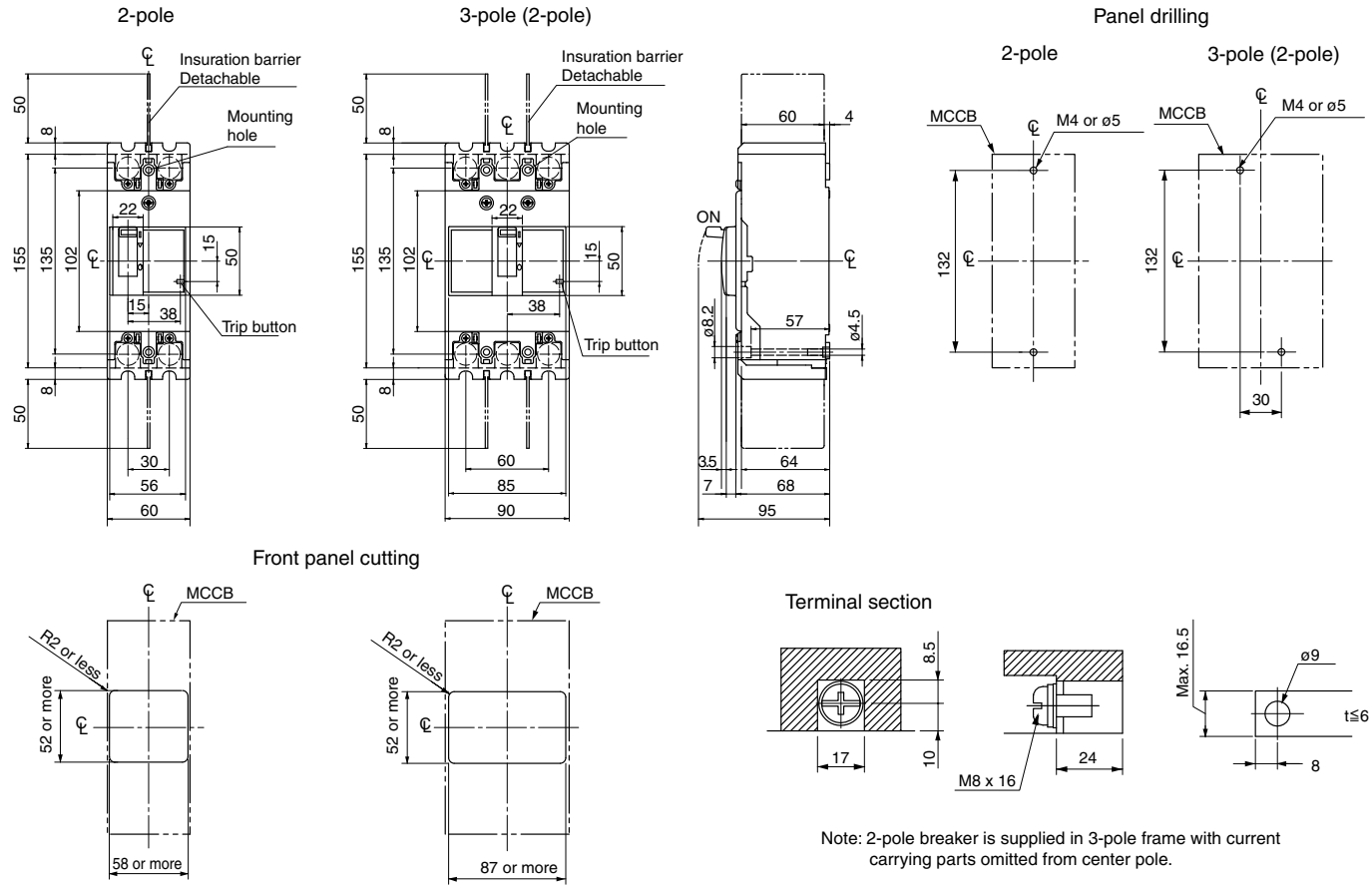

Note: 2-pole breaker is supplied in 3-pole frame with current carrying parts omitted from center pole.

BW250□U-2P, 3P

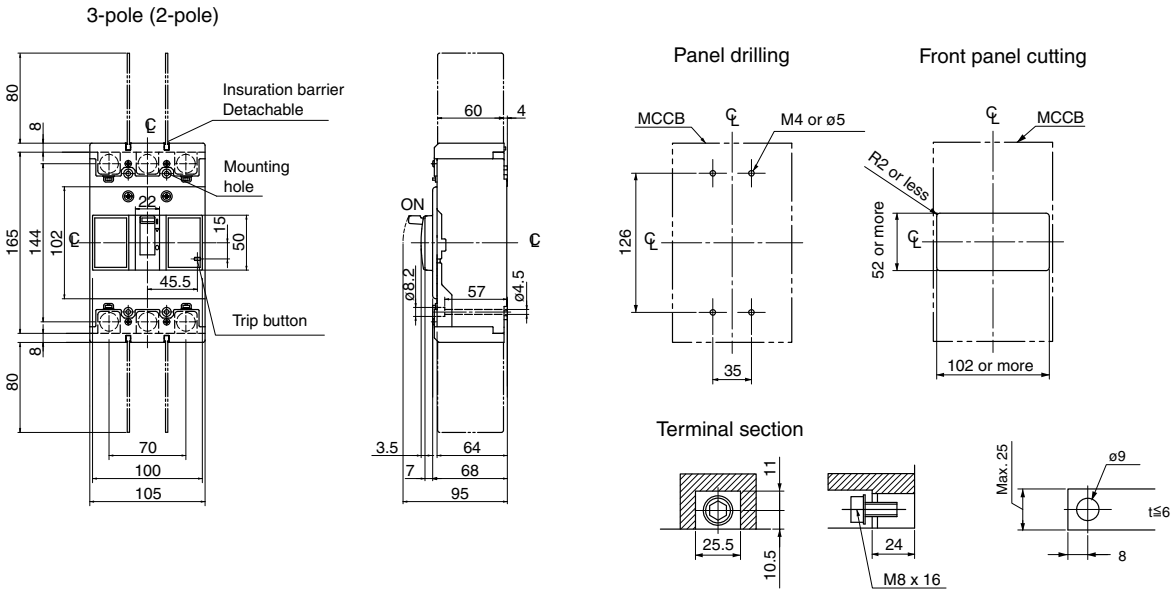

Note: 2-pole breaker is supplied in 3-pole frame with current carrying parts omitted from center pole.

Downloaded from Arrow.com.

■ **Dimensions, mm**

● **Front mounting, front connection**

BW400□U-2P, 3P

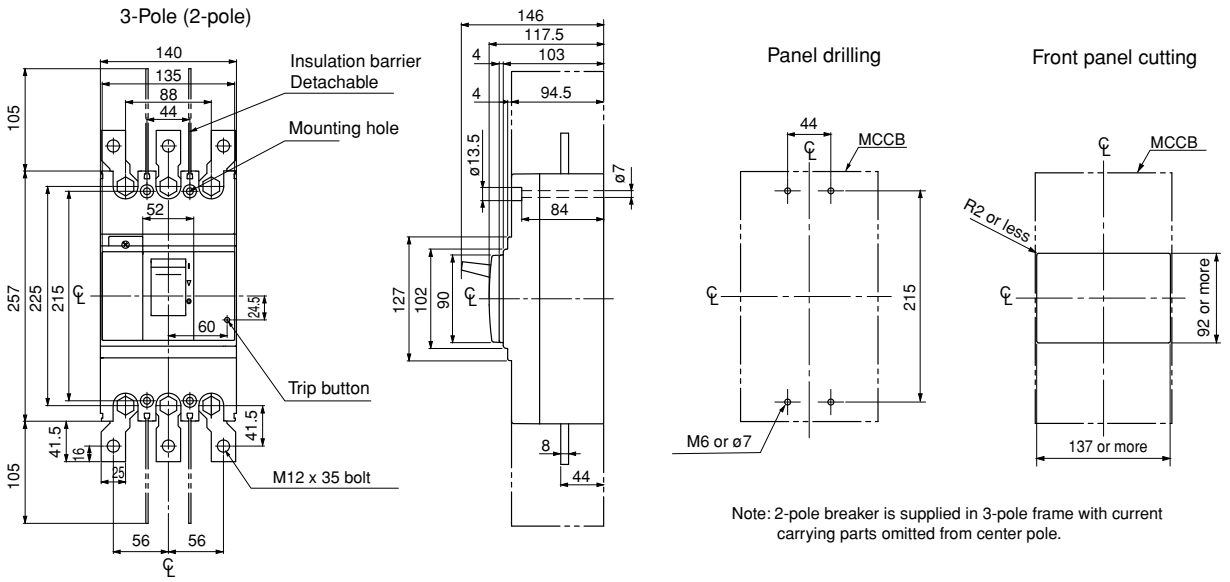

Note: 2-pole breaker is supplied in 3-pole frame with current carrying parts omitted from center pole.

BW630□U-3P

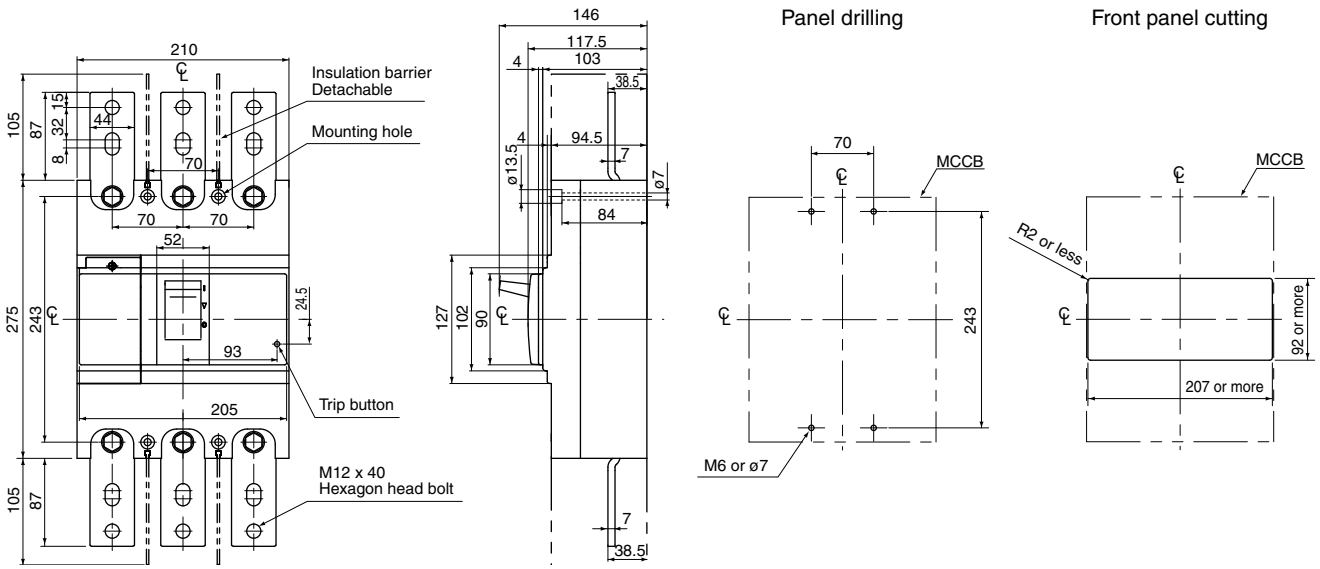

Downloaded from Arrow.com.

■ **Dimensions, mm**

● **Front mounting, front connection**

BW800□U-3P

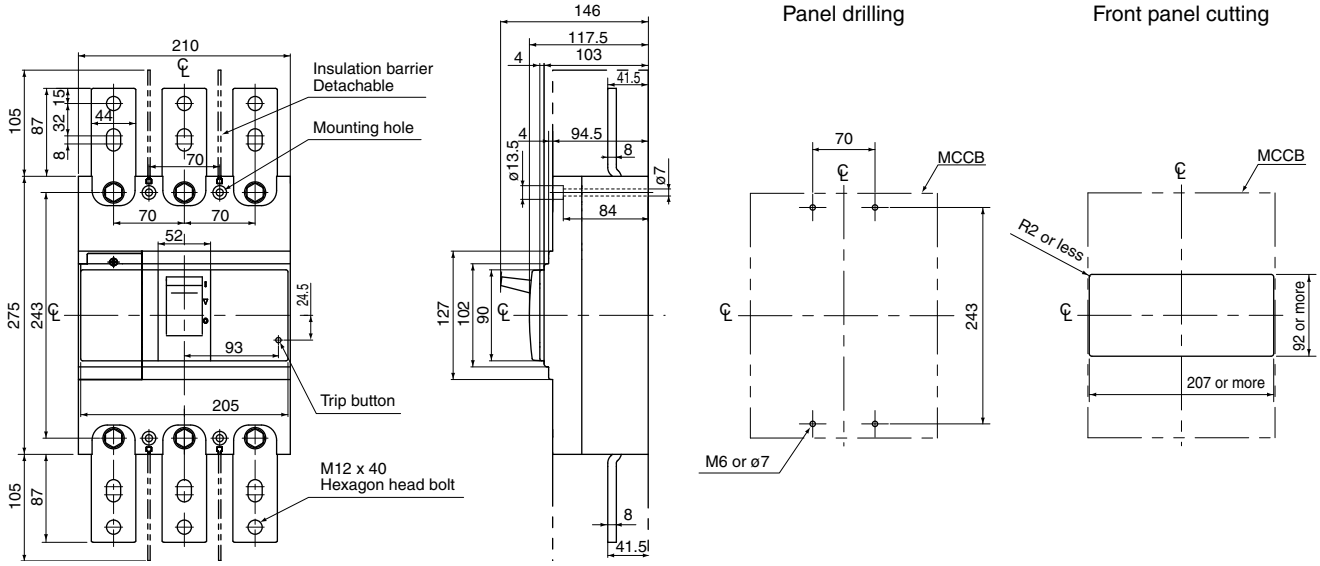

06

Downloaded from Arrow.com.

■ Characteristic curves / Line protection

BW32, 50, 63, 100

Rated current: 5, 10, 32, 40, 60, 63, 70, 75, 80, 90A

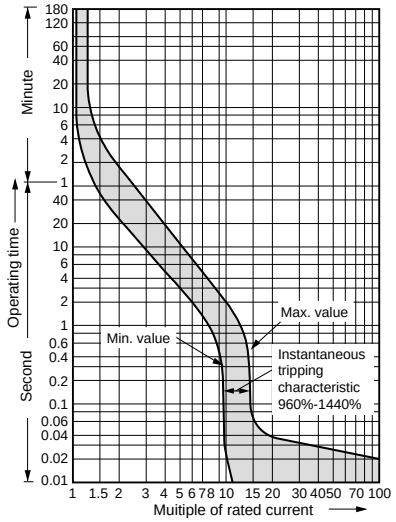

Rated current: 3, 15, 20, 30, 50,100A

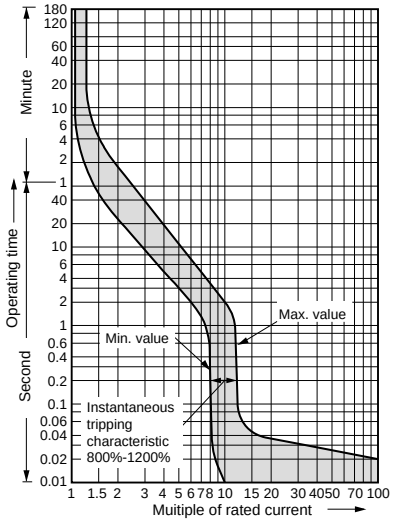

Temperature correction curve

Reference temp. 40℃

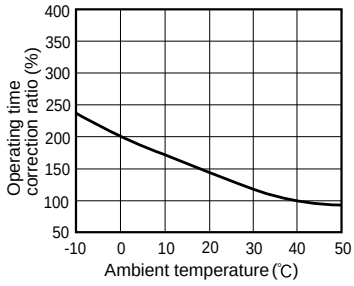

BW50HAG, BW125

• 15A

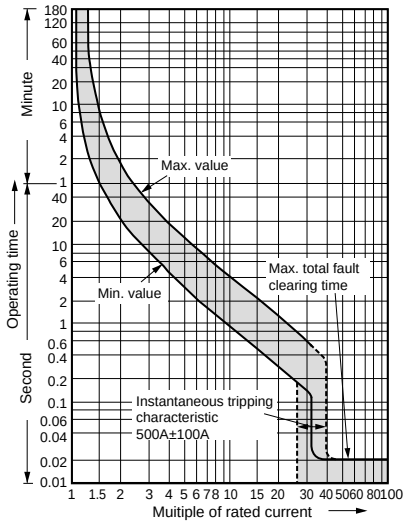

• 20A

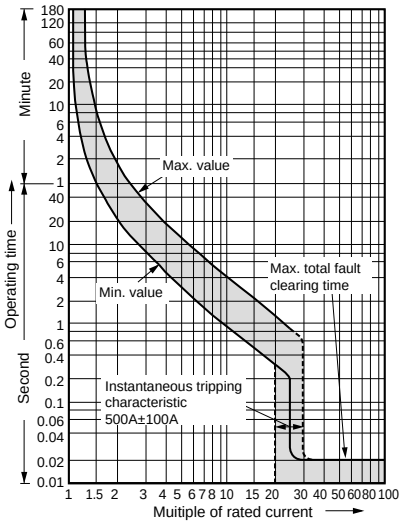

• 30A

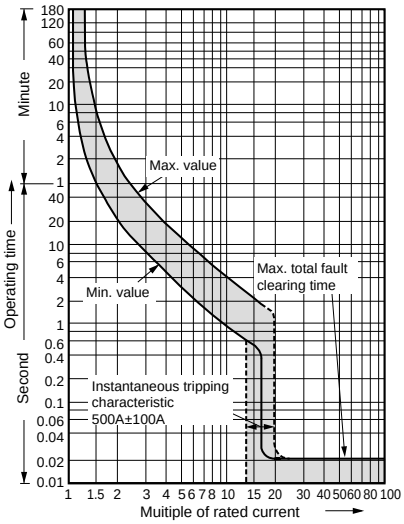

Temperature correction curve

• 15-30A

Reference temp. 40°C

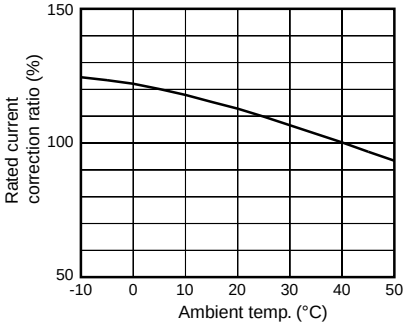

Downloaded from Arrow.com.

■ Characteristic curves / Line protection

BW50HAG, BW125

• **40A**

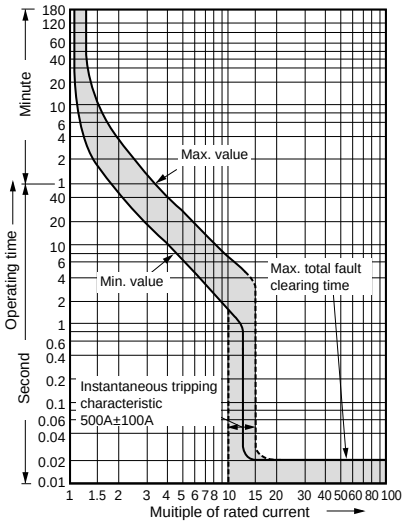

• **50-125A**

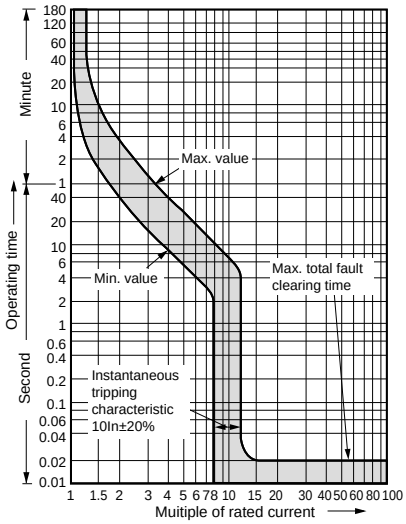

Temperature correction curve

• **40-125A**

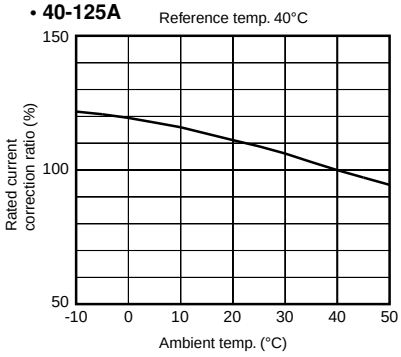

BW160, 250

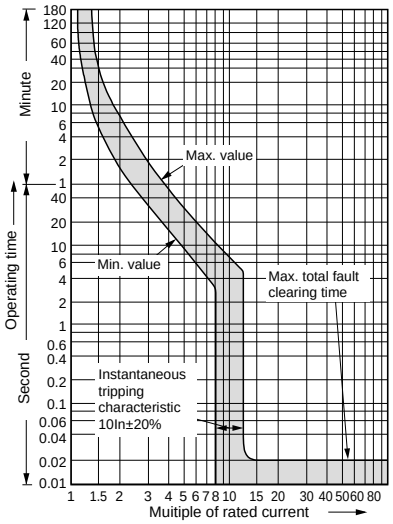

Temperature correction curve

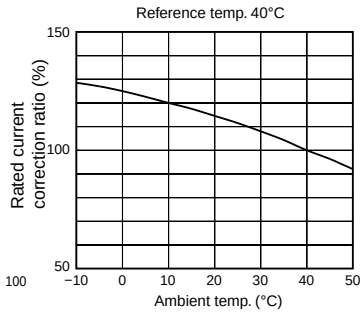

BW400

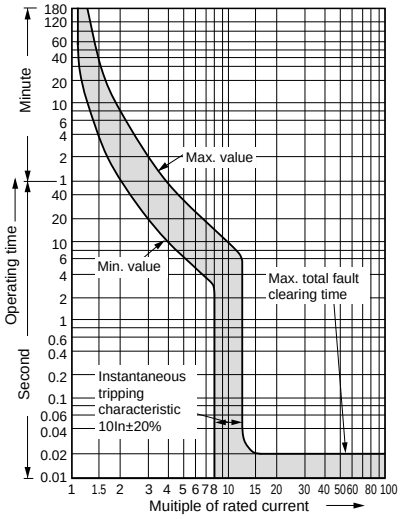

Temperature correction curve

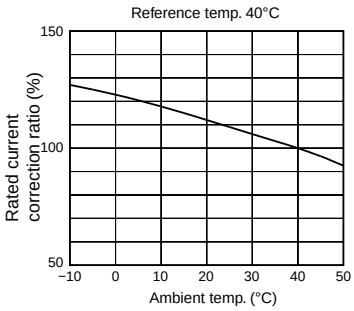

Downloaded from Arrow.com.

■ Characteristic curves / Line protection

BW630

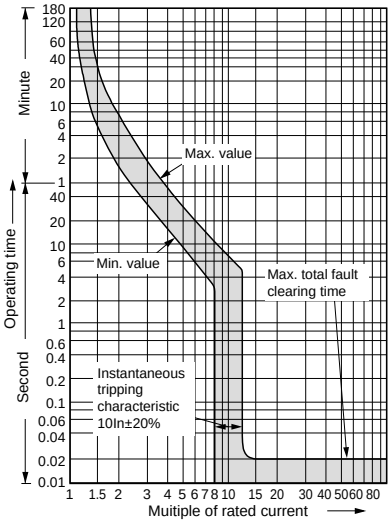

Temperature correction curve

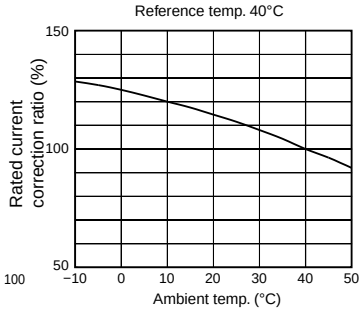

BW800

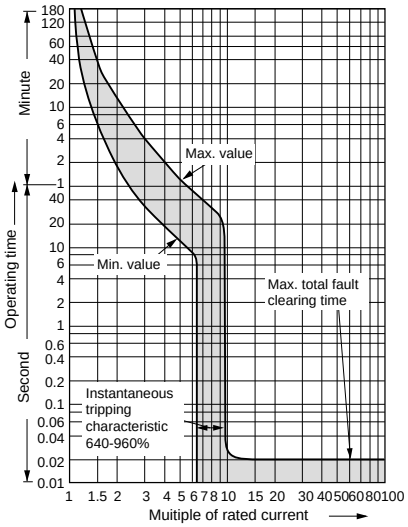

Temperature correction curve

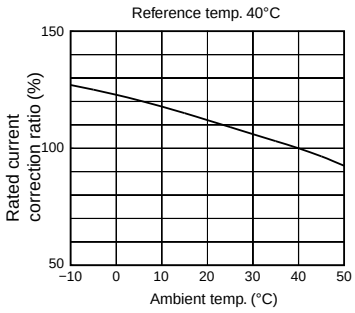

Downloaded from Arrow.com.

■ Characteristic curves / Motor protection

BW32, 50, 63, 100

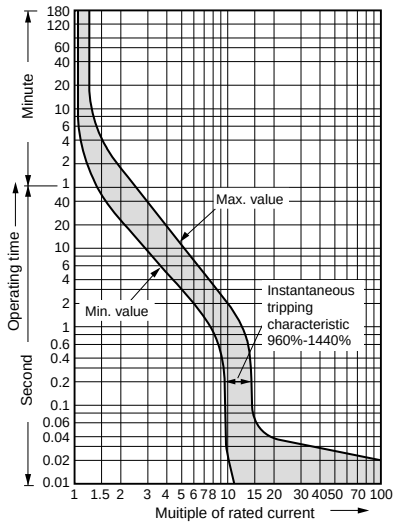

Temperature correction curve

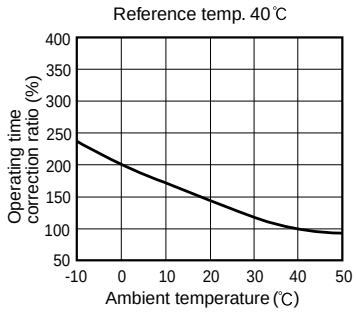

BW125

• 16A

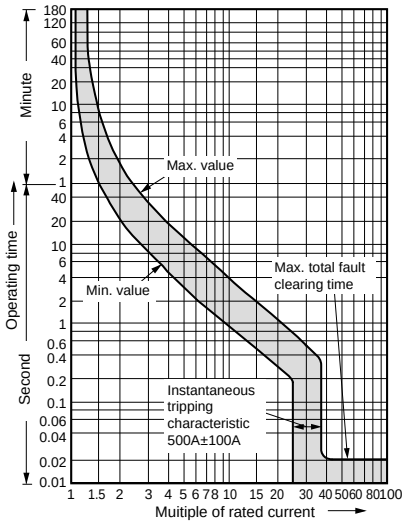

• 24A

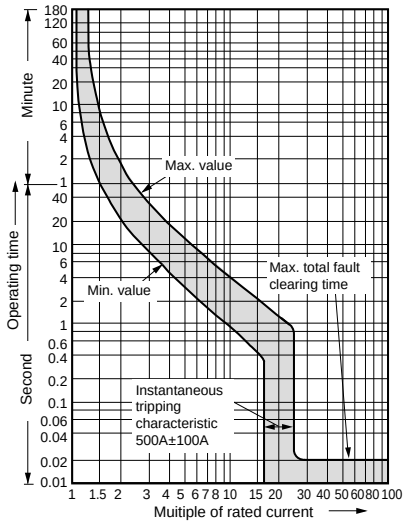

• 32A

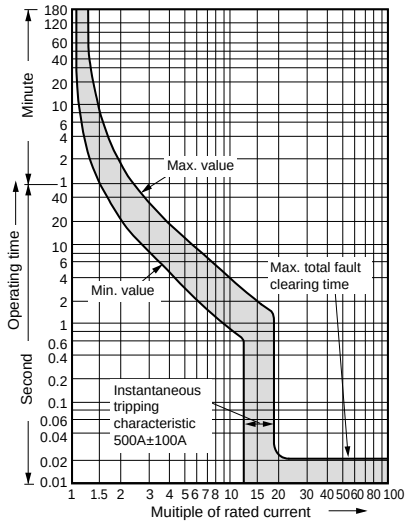

• 40-90A

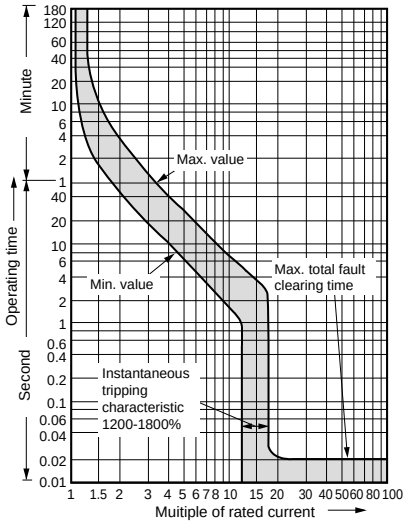

Temperature correction curve

• 15-32A

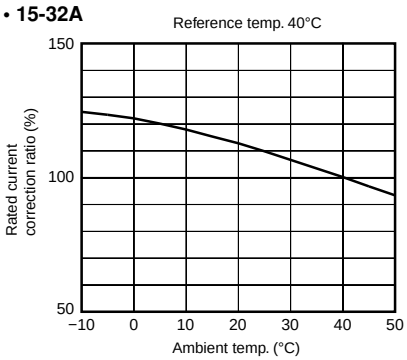

• 40-125A

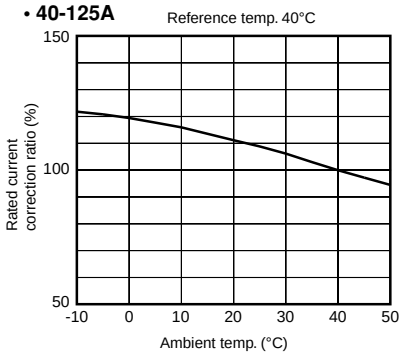

Downloaded from Arrow.com.

■ Characteristic curves / Motor protection

BW250

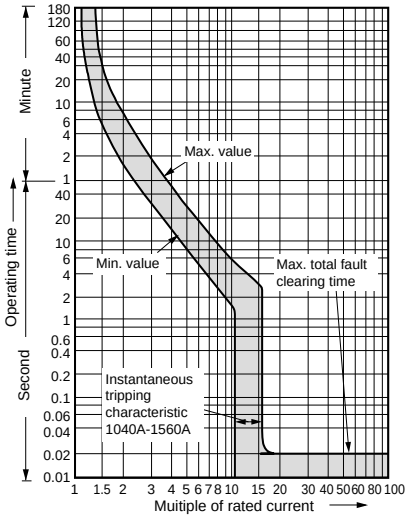

Temperature correction curve

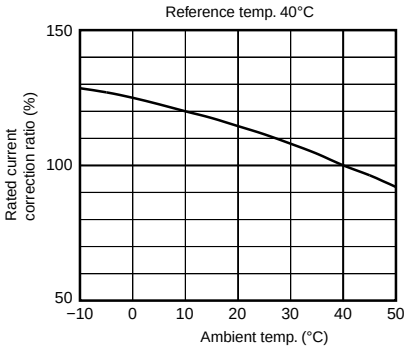

Downloaded from Arrow.com.

■ **Variation of internal accessory**

• **32 to100AF**

Auxiliary switch (Type W)

This switch is used for indicator lamp or control circuit.
See page 06/69.

Alarm switch (Type K)

This switch can be connected to a warning lamp or buzzer to indicate when the breaker has been tripped.
See page 06/69.

Shunt trip device (Type F)

The purpose of this accessory is to trip the breaker from a distance.
See page 06/70.

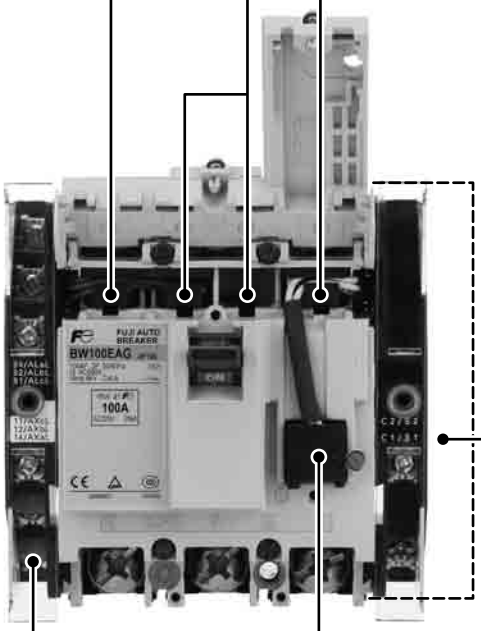

Undervoltage trip device (Type R)

The device is designed to protect circuits from harmful voltage drops.
It can also be used for remote control purposes. The trip operates when the voltage drops to less than 70% of nominal coil rating, and the breaker cannot be reset until the voltage recovers 85% of its normal rating.
See page 06/70.

Terminal block (Type A)

A wiring terminal for internal accessories (Order with W, K or F)
See page 06/71.

Downloaded from Arrow.com.

■ Variation of internal accessory

• 125 to 250AF

Auxiliary switch (Type W)

This switch is used for indicator lamp or control circuit.
See page 06/69.

Alarm switch (Type K)

This switch can be connected to a warning lamp or buzzer to indicate when the breaker has been tripped.
See page 06/69.

Shunt trip device (Type F)

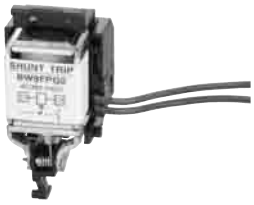

The purpose of this accessory is to trip the breaker from a distance.
See page 06/70.

Undervoltage trip device (Type R)

The device is designed to protect circuits from harmful voltage drops.
It can also be used for remote control purposes. The trip operates when the voltage drops to less than 70% of nominal coil rating, and the breaker cannot be reset until the voltage recovers 85% of its normal rating.
See page 06/70.

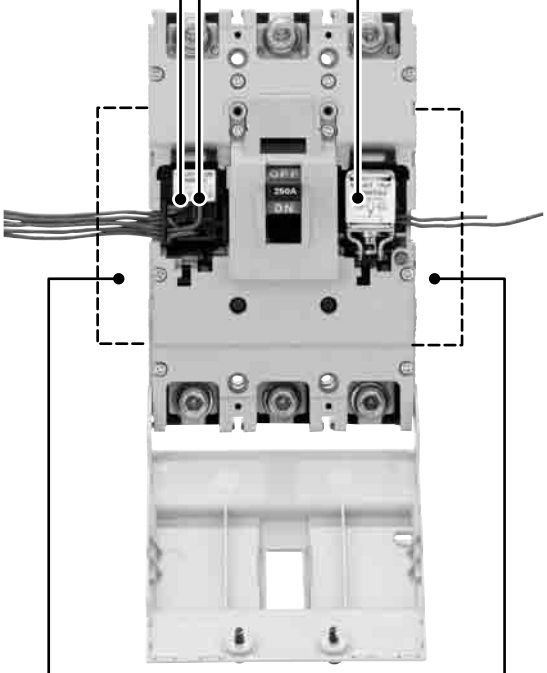

Terminal block (Type A)

A wiring terminal for internal accessories (Factory-mounted)
See page 06/71.

Downloaded from Arrow.com.

■ **Variation of internal accessory**

• **400 to 800AF**

Alarm switch (Type K)

This switch can be connected to a warning lamp or buzzer to indicate when the breaker has been tripped.
See page 06/69.

Shunt trip device (Type F)

The purpose of this accessory is to trip the breaker from a distance.
See page 06/70.

Terminal block (Type A)

A wiring terminal for internal accessories (Factory-mounted)
See page 06/71.

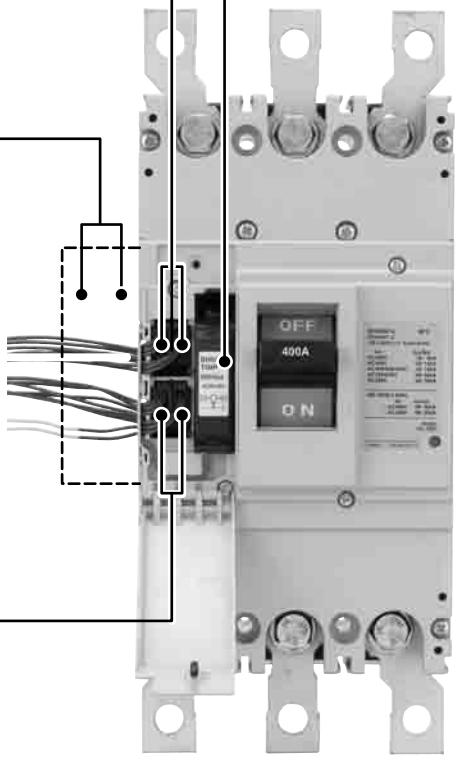

Undervoltage trip device (Type R)

The device is designed to protect circuits from harmful voltage drops.
It can also be used for remote control purposes. The trip operates when the voltage drops to less than 70% of nominal coil rating, and the breaker cannot be reset until the voltage recovers 85% of its normal rating.
See page 06/70.

Auxiliary switch (Type W)

This switch is used for indicator lamp or control circuit.
See page 06/69.

Downloaded from Arrow.com.

■ Variation of external accessory

External operating handles

• **N-type**
See page 06/79.

• **V-type**
See page 06/79.

• **F-type**
See page 06/79.

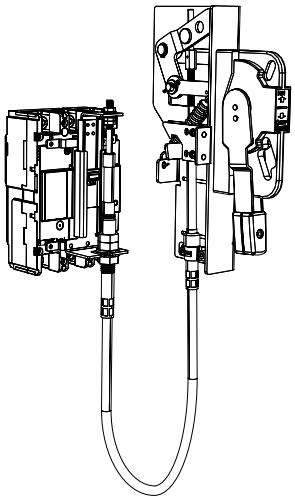

Terminal cover
Long type
See page 06/90.

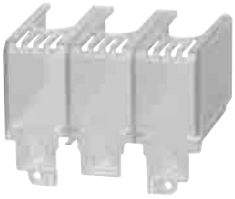

Interphase barrier
See page 06/92.

Terminal cover
Short type
See page 06/91.

Steel enclosures
See page 06/88.

Mechanical interlock device
See page 06/75.

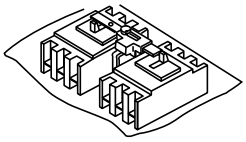

Motor-operating mechanism
See page 06/74.

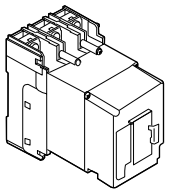

Handle locking cover (L1)
See page 06/93.

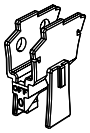

Padlocking device
See page 06/93.

• **Cap type (Q1, QN)**

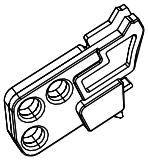

• **Plate type (Q2)**

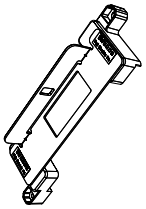

Downloaded from Arrow.com.

■ Terminal blocks for auxiliary circuit

- It indicates the terminal No. of internal accessory.The connection method of internal accessory is lead-wire system and terminal block system.
- For the available configuration of internal accessory, *see page 06/68.*

Lead-wire wiring

With terminal block

• Terminal number of internal accessory

Accessory		32 – 250AF		400 – 800AF
		Left side mounting	Right side mounting	Left side mounting
Auxiliary switch	SPDT: W (1)*	11 AXcL, 12 AXbL, 14 AXaL	21 AXcR, 22 AXbR, 24 AXaR	11 AXc, 12 AXb, 14 AXa
	2PDT: V (2)*	11 AXcL, 12 AXbL, 14 AXaL	21 AXcR, 22 AXbR, 24 AXaR	11 AXc, 12 AXb, 14 AXa 21 AXc, 22 AXb, 24 AXa
Alarm switch	SPDT: K (8)*	91 ALcL, 92 ALbL, 94 ALaL	01 ALcR, 02 ALbR, 04 ALaR	91 ALc, 92 ALb, 94 ALa
	2PDT: J (9)*	91 ALcL, 92 ALbL, 94 ALaL	01 ALcR, 02 ALbR, 04 ALaR	91 ALc, 92 ALb, 94 ALa 01 ALc, 02 ALb, 04 ALa
Shunt trip device : F	With 1NO contact to prevent coil burn-out	C2 S2, C1 S1		—
	Continuous rating	—		C2 S2, C1 S1
Undervoltage trip device : R		U< D2 P2, D1 P1		

Note: * ( ) Code of Low level circuit

06

Downloaded from Arrow.com.

■ Available configurations

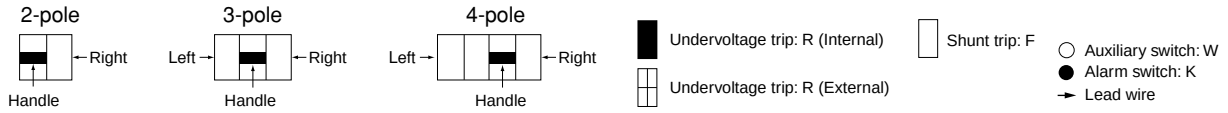

MCCB	BW32□-2P BW50□-2P BW63□-2P BW100□-2P	BW32□-3P BW50□-3P BW63□-3P BW100□-3P	BW125JAG-2P BW125JAGU-2P	BW125 BW160 BW250 (Except for BW125JAG-2P, BW125JAGU-2P)		BW400 BW630 BW800
Pole	2	3	2	2, 3	4	2, 3, 4
Auxliary switch SPDT: W (1)*						
Alarm switch SPDT: K (8)*						
Shunt trip: F						
Undervoltage trip: R	*2	*2				
W+K (1+8)						
Auxliary switch 2PDT: V (2)						
Alarm switch 2PDT: J (9)						
V+K (2+8)						
W+J (1+9)						
V+J (2+9)						
W+F (1+F)						
W+R (1+R)	*2 *1	*2				
K+F (8+F)						
K+R (8+R)	*2 *1	*2				
W+K+F (1+8+F)						
W+K+R (1+8+R)	*2 *1	*2				
V+F (2+F)						
V+R (2+R)		*2 *1				
J+F (9+F)						
J+R (9+R)		*2 *1				
V+K+F (2+8+F)						
V+K+R (2+8+R)		*2 *1				
W+J+F (1+9+F)						
W+J+R (1+9+R)		*2 *1				
V+J+F (2+9+F)					*1	
V+J+R (2+9+R)		*2 *1			*1	

Notes: •The above table is applied to front mounting type, rear mounting type, flush mounting type, and plug-in mounting type.
• Terminal block is attached on the same side of the accessory.
• ( ) Code of low level circuit □:See page 06/2.
*1 Configurations with terminal block are not available.
*2 Flush mounting, rear contection type breakers of 100AF or less are not available.

Downloaded from Arrow.com.

■ Operation of auxiliary switches(W) and alarm switches(K)

Accessory	Handle position		
	ON	OFF	Trip
Auxiliary switch SPDT: **W** **(1)**	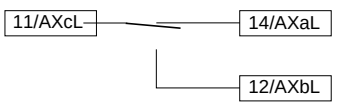	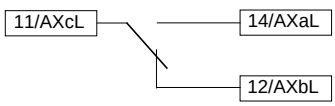	
2PDT: **V** **(2)**	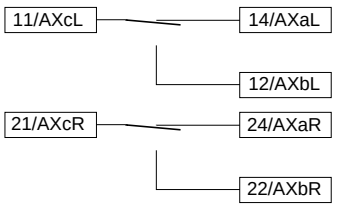	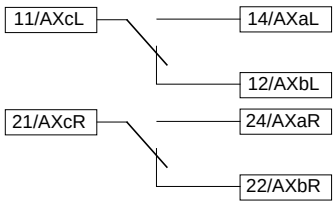	
Alarm switch SPDT: **K** **(8)**	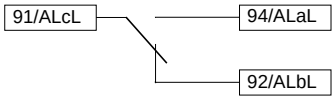		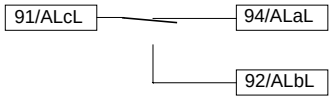
2PDT: **J** **(9)**	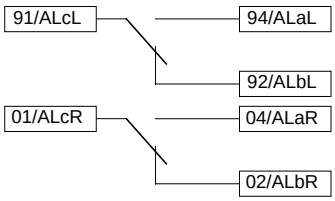		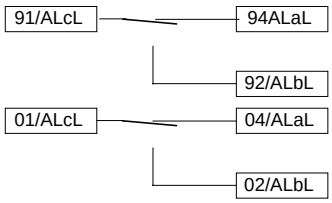

Note: ▭ Ring mark indication
( ) Code of low level circuit

■ Ratings of auxiliary switches(W) and alarm switches(K)

• 32-100AF

	IEC60947-5-1			NECA C4505		Minimum load current
	Voltage (V)	Make/break current (A)		Voltage (V)	Make/break current (A)	
		AC 15	DC 13		Res. load	
Standard type	125 AC	5	–	125 AC	5	5V DC 160mA 30V DC 30mA
	250 AC	5	–	250 AC	3	
	–	–	–	30 DC	4	
	125 DC	–	0.6	125 DC	0.4	
	250 DC	–	0.3	250 DC	0.2	
Low level circuit	–	–	–	30 DC	0.1	5V DC 1mA

• 125-800AF

	Rated thermal current (A)	Rated operational current (A)						Minimum load current
		AC			DC			
		Rated operational Voltage (V)	Res. load	Ind. load	Rated operational Voltage (V)	Res. load	Ind. load	
Standard type	5	24	5	5	24	4	3	5V DC 160mA 30V DC 30mA
		48	5	5	48	2.5	1	
		125	5	3	125	0.4	0.4	
		250	3	2	250	0.2	0.2	
Low level circuit	0.1	30	0.1	–	30	0.1	–	5V DC 1mA

06

Downloaded from Arrow.com.

■ Rating of shunt trip (F)

MCCB type	AC		DC		Code	Time rating of coil	Opearting time (ms)
	V	VA	V	W			
BW32 **BW50** **BW63** **BW100**	100-120	150	100-110	150	FAC100-120V/ DC100-110V	Continuous (With 1NO contact to prevent coil burn-out)	7-13
	200-240	150	–	–	FAC200-240V		
	380-450	200	–	–	FAC380-450V		
	24	150	24	150	FAC/DC24V		
BW125 **BW160** **BW250**	24	50	24	50	FAC/DC24V		13-21
	48	50	48	50	FAC/DC48V		
	100-120	50	100-110	50	FAC100-120V/ DC100-110V		
	120-130	50	–	–	FAC120-130V		
	200-240	50	200-220	50	FAC200-240V/ DC200-220V		
	277	50	–	–	FAC277V		
	380-440	50	–	–	FAC380-440V		
	440-480	50	–	–	FAC440-480V		
	500-550	50	–	–	FAC500-550V		
BW400 **BW630** **BW800**	24-48	2	24-48	2	FAC/DC24-48V	Continuous	8-20
	100-240	3	100-220	3	FAC100-240V DC100-220V		
	277	3		–	FAC277V		
	380-550	4		–	FAC380-550V		

Note: The operating tripping voltage range for shunt trip devices is 70% to 110% of the rated operating voltage.

■ Rating of undervoltage trip (R)

MCCB type	Installation	AC		DC		Code
		V	VA	V	W	
BW32 *2 **BW50** *2 **BW63** *2 **BW100** *2	External	100 (50Hz)/ 100-110(60Hz)	2.8	–	–	RAC100(50Hz)/ 100-110V(60Hz)
		200 (50Hz)/ 200-220 (60Hz)	3.4	–	–	RAC200(50Hz)/ 200-220V(60Hz)
		400 (50Hz)/ 400-440 (60Hz)	4.4	–	–	RAC400(50Hz)/ 400-440V(60Hz)
		–	–	24	40	RDC24V
				100-110		RDC100-110V
BW125 *1 **BW160** *1 **BW250** *1	Internal	–	–	24	5	RDC24V
		–	–	48	5	RDC48V
		–	–	100-110	5	RDC100-110V
		–	–	125	5	RDC125V
		100-110	5	–	–	RAC100-110V
		110-130	5	–	–	RAC110V-130V
		200-240	5	–	–	RAC200-240V
		277	5	–	–	RAC277V
		380-415	5	–	–	RAC380-415V
		440-480	5	–	–	RAC440V-480V
BW400 *2 **BW630** *2 **BW800** *2	Internal	24	2	24	2	RAC/DC24V
		48	2	48	2	RAC/DC48V
		100-110	3	100-110	3	RAC/DC100-110V
		120-130	3	125	3	RAC120-130V/DC125V
		200-240	3	200-220	3	RAC200-240V/DC200-220V
		277	3	–	–	RAC277V
		380-480	4	–	–	RAC380-480V

Notes: • The operating voltages of undervoltage tripping devices are as follows:
Tripping voltage: 35% to 70% of rated voltage, closing voltage: 85% to 110% of rated voltage.

*1 Reset-allowed type: When the breaker handle is in the OFF or RESET state, tripping does not occur even if the R coil is not energized. Turning ON with the R coil not energized causes normal tripping.

*2 Reset-prohibited type: When the R coil is not energized, reset operation cannot reset the tripped breaker to the OFF state.

Downloaded from Arrow.com.

■ Lead wire specification

AF	Pole	wire size	Wire length
32 to 100AF	–	0.4mm^2 (AWG22)	Ca 500mm
125 to 250AF	2P, 3P	0.5mm^2 (AWG20)	
	4P		
400 to 800AF	2P, 3P	0.5mm^2	Ca 500mm
	4P		Ca 400 to 450mm

■ Terminal blocks

32AF, 50AF, 63AF, 100AF

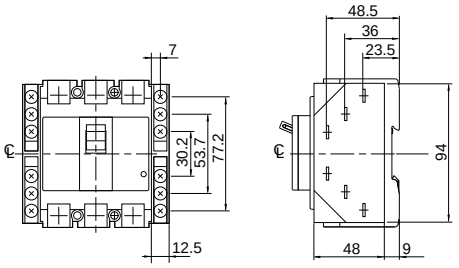

125AF, 160AF, 250AF

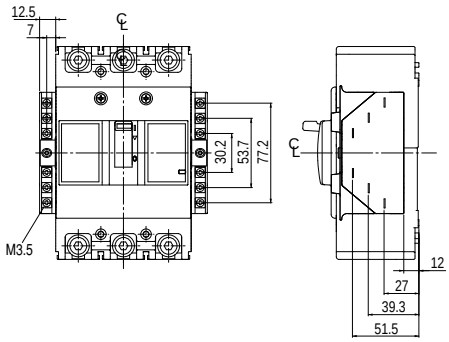

400AF, 630AF, 800AF

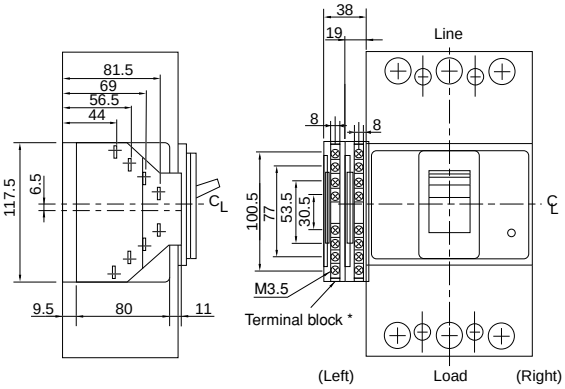

Notes:
* If the chosen combination has more than 8 terminals, 2 terminal blocks are mounted.
• Mount the terminal block on the surface on which the accessories are mounted.
See the table of the combinations of internal accessories on pages 06/68.
for information on the accessory mounting position.
• Available wire: Solid wire: 1.6ø Stranded wire: 2mm^2
• Terminal blocks are available as factory mounted only.

■ Undervoltage trip device

32AF, 50AF, 63AF, 100AF

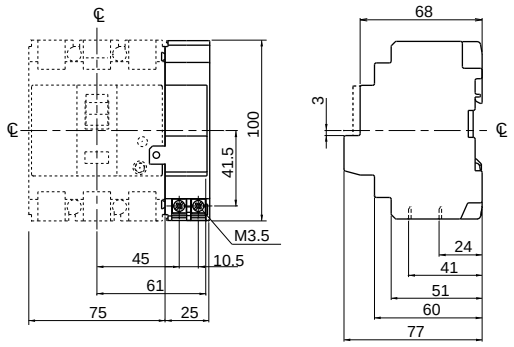

Mass: 0.15kg

Downloaded from Arrow.com.

■ Type number

Internal accessories (Sold separately)

• 32, 50, 63, 100AF IEC/EN/GB/JIS conformed

Accessory	Type				Operating voltge
	Lead wire system		Terminal block system		
	Left side	Right side	Left side	Right side	
Auxiliary switch	**BZ6WL10C**	**BZ6WR10C**	**BZ6WL10CA**	**BZ6WR10CA**	
Auxiliary switch (low level circuit)	**BZ6WDL10C**	**BZ6WDR10C**	**BZ6WDL10CA**	**BZ6WDR10CA**	
Alarm switch	**BZ6KL10C**	**BZ6KR10C**	**BZ6KL10CA**	**BZ6KR10CA**	
Alarm switch (low level circuit)	**BZ6KDL10C**	**BZ6KDR10C**	**BZ6KDL10CA**	**BZ6KDR10CA**	
Auxiliary switch + Alarm switch	**BZ6WKL10C**	**BZ6WKR10C**	**BZ6WKL10CA**	**BZ6WKR10CA**	
Auxiliary switch + Alarm switch (low level circuit)	**BZ6WDKDL10C**	**BZ6WDKDR10C**	**BZ6WDKDL10CA**	**BZ6WDKDR10CA**	
Shunt trip device	–	**BZ6FA10C**	–	**BZ6FA10CA**	100-120V AC/100-110V DC
	–	**BZ6FK10C**	–	**BZ6FK10CA**	200-240V AC
	–	**BZ6FP10C**	–	**BZ6FP10CA**	380-450V AC
	–	**BZ6FR10C**	–	**BZ6FR10CA**	24V AC/DC
Undervoltage trip device	–	–	–	**BZ6R210C**	100V AC 50Hz/100-110V AC 60Hz
	–	–	–	**BZ6R110C**	110V AC 50Hz/110-127V AC 60Hz
	–	–	–	**BZ6RW10C**	200V AC 50Hz/200-220V AC 60Hz
	–	–	–	**BZ6R410C**	220V AC 50Hz/220-240V AC 60Hz
	–	–	–	**BZ6R510C**	230V AC 50Hz/230-240V AC 60Hz
	–	–	–	**BZ6R810C**	240V AC 50Hz
	–	–	–	**BZ6R010C**	380V AC 50Hz 380-415V AC 60Hz
	–	–	–	**BZ6R910C**	400V AC 50Hz 400-440V AC 60Hz
	–	–	–	**BZ6RF10C**	24V DC
	–	–	–	**BZ6RT10C**	100-110V DC

• 50, 100AF IEC/EN/GB/JIS/UL/CSA conformed

Accessory	Type				Operating voltge
	Lead wire system		Terminal block system		
	Left side	Right side	Left side	Right side	
Auxiliary switch	**BZ6WL10CU**	**BZ6WR10CU**	**BZ6WL10CAU**	**BZ6WR10CAU**	
Auxiliary switch (low level circuit)	**BZ6WDL10CU**	**BZ6WDR10CU**	**BZ6WDL10CAU**	**BZ6WDR10CAU**	
Alarm switch	**BZ6KL10CU**	**BZ6KR10CU**	**BZ6KL10CAU**	**BZ6KR10CAU**	
Alarm switch (low level circuit)	**BZ6KDL10CU**	**BZ6KDR10CU**	**BZ6KDL10CAU**	**BZ6KDR10CAU**	
Auxiliary switch + Alarm switch	**BZ6WKL10CU**	**BZ6WKR10CU**	**BZ6WKL10CA**	**BZ6WKR10CAU**	
Auxiliary switch + Alarm switch (low level circuit)	**BZ6WDKDL10CU**	**BZ6WDKDR10CU**	**BZ6WDKDL10CAU**	**BZ6WDKDR10CAU**	
Shunt trip device	–	**BZ6FA10CU**	–	**BZ6FA10CAU**	100-120V AC/100-110V DC
	–	**BZ6FK10CU**	–	**BZ6FK10CAU**	200-240V AC
	–	**BZ6FP10CU**	–	**BZ6FP10CAU**	380-450V AC
Undervoltage trip device	–	–	–	**BZ6R210CAU**	100V AC 50Hz/100-110V AC 60Hz
	–	–	–	**BZ6RW10CAU**	110V AC 50Hz/110-127V AC 60Hz
	–	–	–	**BZ6R910CAU**	200V AC 50Hz/200-220V AC 60Hz

Downloaded from Arrow.com.

• 125, 160, 250AF IEC/EN/GB/JIS/UL/CSA conformed

Accessory	Type				Operating voltge
	Lead wire system		Terminal block system		
	Left side	Right side	Left side	Right side *	
Auxiliary switch	**BW9W1SG0**	**BW9W1SG0-R**	**BW9W1SG0-A**	–	–
Auxiliary switch (low level circuit)	**BW9W1DG0**	**BW9W1DG0-R**	**– ***		
Alarm switch	**BW9K1SG0**	**BW9K1SG0-R**	**BW9K1SG0-A**		
Alarm switch (low level circuit)	**BW9K1DG0**	**BW9K1DG0-R**	**– ***		
Auxiliary switch + Alarm switch	**BW9WKSG0**	**BW9WK1SG0-R**	**BW9WKSG0-A**		
Auxiliary switch + Alarm switch (low level circuit)	**BW9WKDG0**	**BW9WK1DG0-R**	**– ***		
Shunt trip device	**BW9FRG0**	**BW9FRG0**	**BW9FRG0-A**		24V AC/DC
	BW9FSG0	**BW9FSG0**	**BW9FSG0-A**		48V AC/DC
	BW9FAG0	**BW9FAG0**	**BW9FAG0-A**		100-120V AC/100-110V DC
	BW9F1G0	**BW9F1G0**	**BW9F1G0-A**		120-130V AC
	BW9FKG0	**BW9FKG0**	**BW9FKG0-A**		200-240V AC/200-220V DC
	BW9FBG0	**BW9FBG0**	**BW9FBG0-A**		277V AC
	BW9FPG0	**BW9FPG0**	**BW9FPG0-A**		380-440V AC
	BW9FHG0	**BW9FHG0**	**BW9FHG0-A**		440-480V AC
	BW9FJG0	**BW9FJG0**	**BW9FJG0-A**		500-550V AC
Undervoltage trip devics	**BW9RGAR**	–	**BW9RGAR-A**		24V DC
	BW9RGAS		**BW9RGAS-A**		48V DC
	BW9RGAL		**BW9RGAL-A**		100-110V DC
	BW9RGA5		**BW9RGA5-A**		125V DC
	BW9RGAA		**BW9RGAA-A**		100-110V AC
	BW9RGAT		**BW9RGAT-A**		110-130V AC
	BW9RGAK		**BW9RGAK-A**		200-240V AC
	BW9RGAB		**BW9RGAB-A**		277V AC
	BW9RGAP		**BW9RGAP-A**		380-415V AC
	BW9RGAH		**BW9RGAH-A**		440-480V AC

Note: * Factory-mounted

• 400, 630, 800AF IEC/EN/GB/JIS/UL/CSA conformed

Accessory	Type		Operating voltge
	Lead wire system	Terminal block system *	
	Left side		
Auxiliary switch x 1	**BW9W1SHA**	–	–
Auxiliary switch x 2	**BW9W2SHA**		
Auxiliary switch (low level circuit) x 1	**BW9W1DHA**		
Auxiliary switch (low level circuit) x 2	**BW9W2DHA**		
Alarm switch x 1	**BW9K1SHA**		
Alarm switch x 2	**BW9K2SHA**		
Alarm switch (low level circuit) x 1	**BW9K1DHA**		
Alarm switch (low level circuit) x 2	**BW9K2DHA**		
Shunt trip device	**BW9FHA-R**		24-48V AC/DC
	BW9FHA-A		100-240V AC/100-220V DC
	BW9FHA-B		277V AC
	BW9FHA-P		380-550V AC
Undervoltage trip devics	**BW9RHA-R**		24V AC/DC
	BW9RHA-S		48V AC/DC
	BW9RHA-A		100-110 AC/DC
	BW9RHA-1		120-130V AC/125V DC
	BW9RHA-K		200-240V AC/200-220V DC
	BW9RHA-B		277V AC
	BW9RHA-P		380-480V AC

Note: * Factory-mounted

Downloaded from Arrow.com.

Motor-operated breakers

■ Description

The breaker is fitted with a motor operating mechanism which enables ON, OFF and RESET operations to be carried out electronically by remote control.

The breakers do not conform to IEC and EN standard.

■ Type and ratings

MCCB type	Motor rating			Power source capacity	Mass (kg)
	Operating voltage	Operating time	Time rating		
BW32□-3P□M, BW50□-3P□M, BW63□-3P□M, BW100□-3P□M	100V DC 100/110V AC 200/220V AC	0.1s	15s per on-off operation	500VA	1.2
					1.3

■ Ordering information

Specify the following:
1. Type number
2. Motor operating voltage

■ Dimensions, mm / Front mounting, front connection

BW32□-3P, BW50□-3P, BW63□-3P, BW100□-3P,

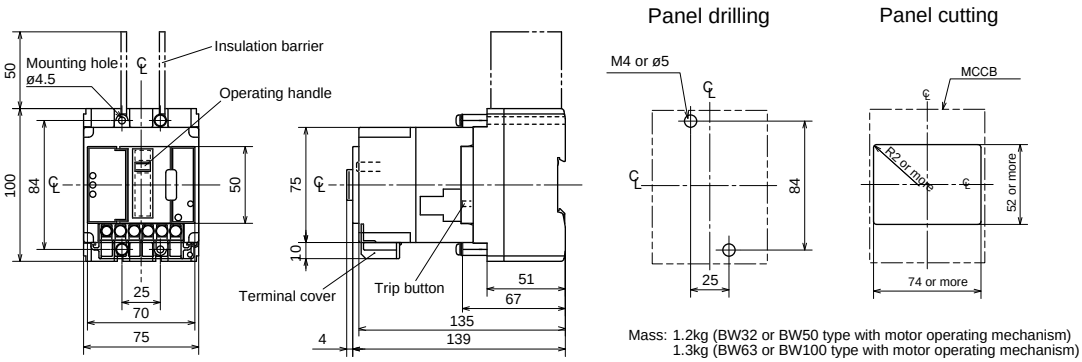

Mass: 1.2kg (BW32 or BW50 type with motor operating mechanism)
1.3kg (BW63 or BW100 type with motor operating mechanism)

Notes: • Trip button operation can be carried out at right side of the breaker.
• IEC 35mm wide mounting rail is not available.

■ Wiring diagrams

100/110V AC, 200/220V AC, 100V DC

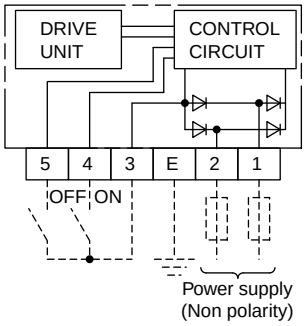

Downloaded from Arrow.com.

Mechanical interlocking devices

■ Description

These interlocking devices are mounted on the two separate breakers to prevent them from both being closed at the same time.
A sliding mechanism that can be locked with a padlock is used. (The padlock is not included.)
They are designed for use when changing over power supplies.
These can be mounted to 3 types of breakers: front-mounting front-connection type, front-mounting rear-connection type (type X), and plug-in mounting type (type P).
Interlock devices for flush mounting type breakers (type E, Y) are also available.

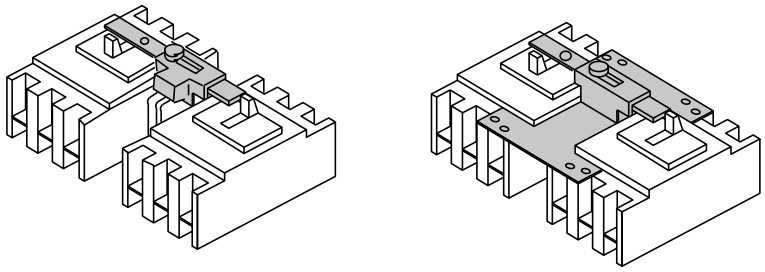

M1 types

■ Type and applicable breakers

Type	Breaker type
BZ6M110C2	BW32AAG-2P, BW32SAG-2P BW50AAG-2P, BW50EAG-2P, BW50SAG-2P, BW50RAG-2P BW63EAG-2P, BW63SAG-2P, BW63RAG-2P BW100EAG-2P
BZ6M110C3	BW32AAG-3P, BW32SAG-3P BW50AAG-3P, BW50EAG-3P, BW50SAG-3P, BW50RAG-3P BW63EAG-3P, BW63SAG-3P, BW63RAG-3P BW100AAG-3P, BW100EAG-3P
BW9M1CA-2	BW125JAG-2P
BW9M1CA-3	BW125JAG-3P, BW125SAG-2P, BW125SAG-3P, BW125RAG-2P, BW125RAG-3P
BW9M1CA-4	BW125JAG-4P, BW125SAG-4P, BW125RAG-4P
BW9M1GA-3	BW160EAG-2P, BW160EAG-3P, BW160JAG-2P, BW160JAG-3P BW160SAG-2P, BW160SAG-3P, BW160RAG-2P, BW160RAG-3P BW250EAG-2P, BW250EAG-3P, BW250JAG-2P, BW250JAG-3P BW250SAG-2P, BW250SAG-3P, BW250RAG-2P, BW250RAG-3P
BW9M1GA-4	BW160JAG-4P, BW160SAG-4P, BW160RAG-4P BW250JAG-4P, BW250SAG-4P, BW250RAG-4P
BW9M1HA-3	BW400EAG-2P, BW400EAG-3P, BW400SAG-2P, BW400SAG-3P BW400RAG-2P, BW400RAG-3P, BW400HAG-2P, BW400HAG-3P
BW9M1HA-4	BW400RAG-4P, BW400HAG-4P
BW9M1JA-3	BW630EAG-3P, BW630RAG-3P, BW630HAG-3P BW800EAG-3P, BW800RAG-3P, BW800HAG-3P

Downloaded from Arrow.com.

■ Dimensions, mm

• 32AF to 100AF

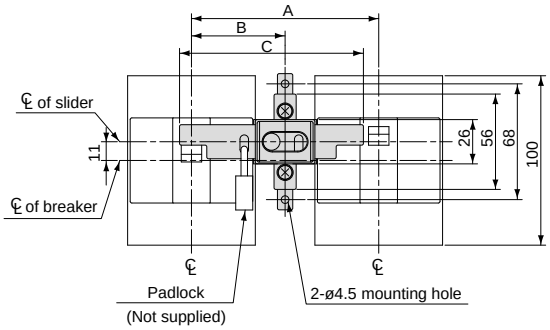

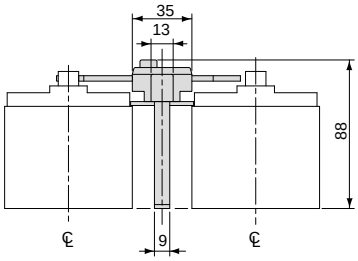

Panel drilling

BZ6M110C2

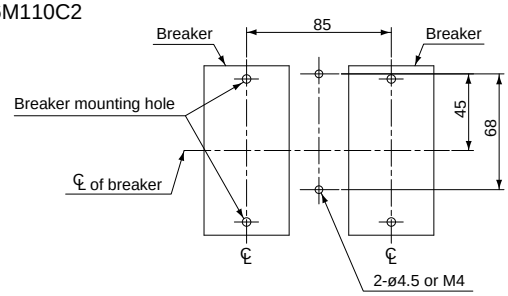

BZ6M110C3

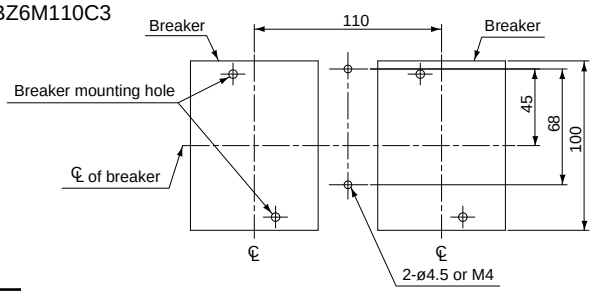

Type	Dimensions, mm A	B	C	Mass (kg)
BZ6M110C2	85	42.5	83	0.11
BZ6M110C3	110	55	108	0.12

Notes: • BZ6M110C2 is not available for padlock.
• Applicable padlock(ø3.5) dimensions, mm
• External installation forms F and R are not applicable to the MCCB on the left of the diagram.

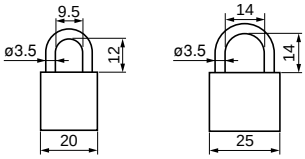

Downloaded from Arrow.com.

■ Dimensions, mm

• 125AF to 250AF

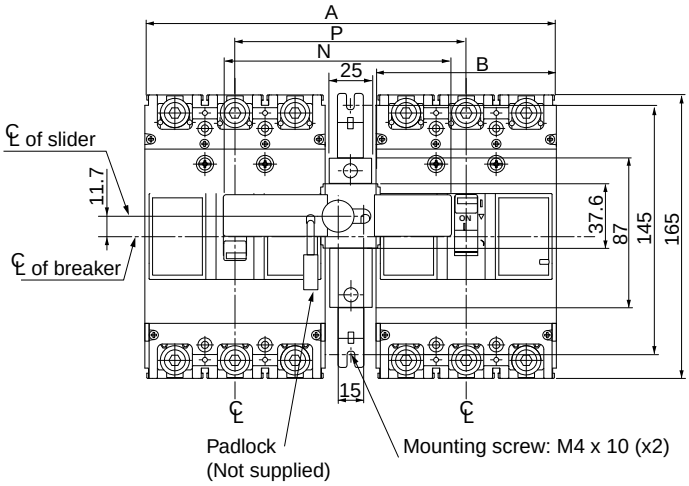

Panel drilling

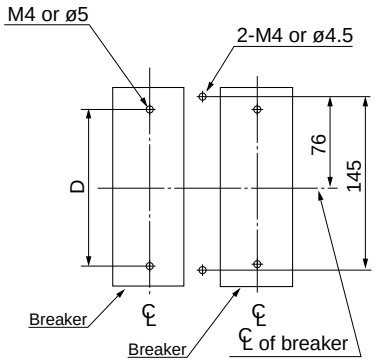

Fig.1

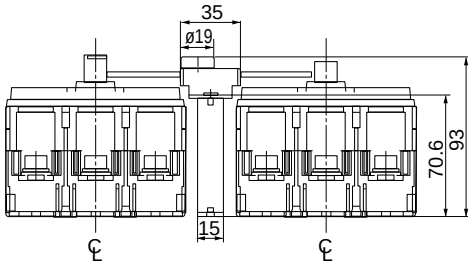

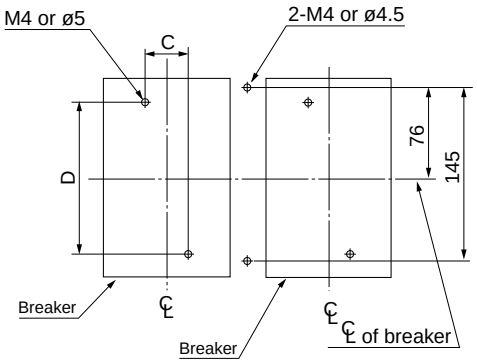

Fig.2

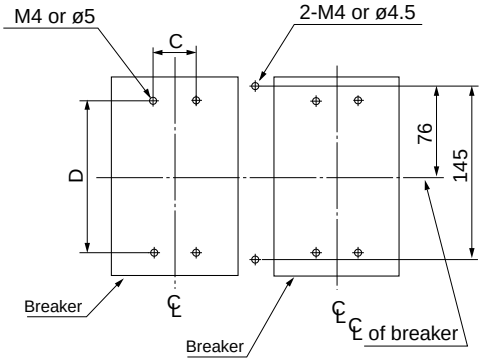

Fig.3

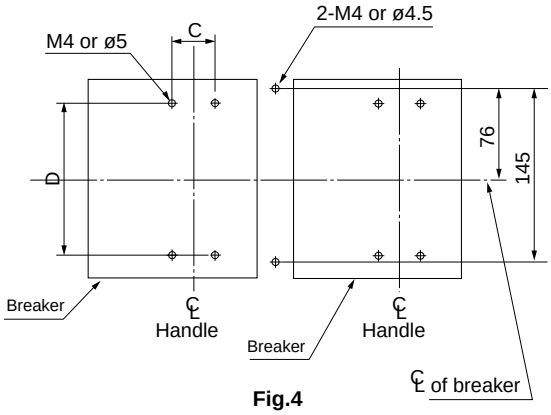

Fig.4

Type	Dimensions, mm						Panel Drilling	Mass(Kg)
	P	N	A	B	C	D		
BW9M1CA-2	90	88	150	60	–	132	Fig.1	
BW9M1CA-3	120	118	210	90	30	132	Fig.2	
BW9M1CA-4	150	148	270	102	30	132	Fig.4	
BW9M1GA-3	135	133	240	105	35	126	Fig.3	
BW9M1GA-4	170	168	310	140	35	126	Fig.4	

Notes: • The dimensions and Breaker mounting holes for back surface mounting are different from those given above. Inquire for details.
• If a padlock is required, use a commercially available padlock with the dimensions shown in the diagram at the right.
• External installation forms F and R are not applicable to the MCCB on the left of the diagram.

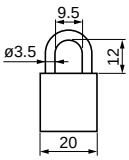

Downloaded from Arrow.com.

■ Dimensions, mm

• 400AF to 800AF

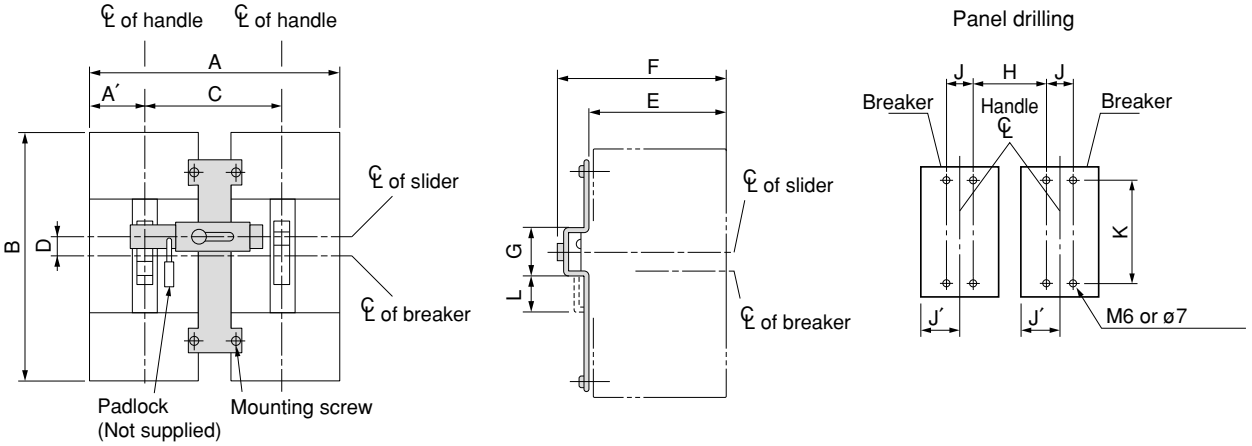

Type	Dimensions, mm											Mass(Kg)
	A (A')	B	C	D	E	F	G	H	J (J')	K	L	
BW9M1HA-3	355 (70)	257	215	20	94.5	132.5	54.5	171	44 (70)	215	38	
BW9M1HA-4	470 (140)	257	260	20	94.5	132.5	54.5	216	44 (140)	215	38	
BW9M1JA-3	500 (105)	275	290	20	94.5	132.5	54.5	220	70 (105)	243	38	

Notes: • The dimensions and Breaker mounting holes for back surface mounting are different from those given above. Inquire for details.
• If a padlock is required, use a commercially available padlock with the dimensions shown in the diagram at the right.
• External installation forms F and R are not applicable to the MCCB on the left of the diagram.

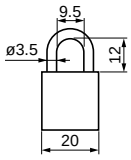

Downloaded from Arrow.com.

External operating handles

■ Description

Molded case circuit breaker handles are generally directly manual-operated but when mounted in motor control centers or on control panels they are sometimes required to be operated externally. To meet such applications FUJI offers the following three types of handles.

N type handle
This type has a knob handle directly attached to the breaker. It is easily fitted by cutting a hole in the panel, which is provided with a door interlock. They may be fitted to all breakers up to 800 ampere frame sizes.
Conformed to EN60947-1 isolation function.
Available for EN60204-1 power breaking device.
Conformed to UL489 (File No.E93289)

V type handle
The V type handle may be fitted to breakers of up to 800AF.
A separately sold extension shaft provides distance adjustment between the handle and breaker.
Conformed to EN60947-1 isolation function.
Available for EN60204-1 power breaking device.
Conformed to UL489 (File No.E93289)

F type handle
The F type handle may be fitted to breakers of 125 to 400AF.
It is a flange type handle, which is commonly used in the North American market.
The drive section of the breaker and the external operating handle are connected with an optional cable.
Positioning between the breaker and the external operating handle is not required.

Conformed to UL489 (File No.E93289)

BW9N0CA
N type handles

BW9V0CA
V type handle

N type handles

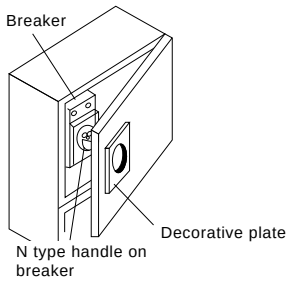

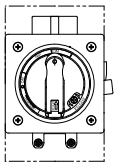

V type handles

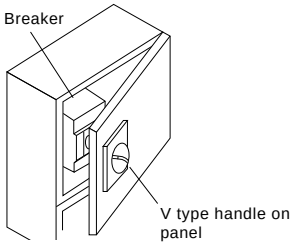

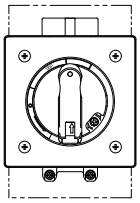

F type handles

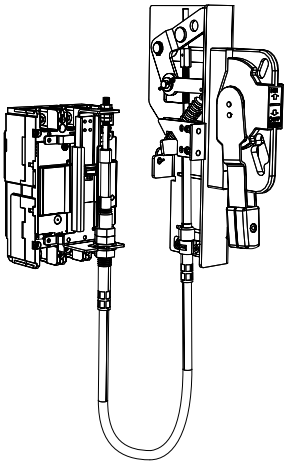

Downloaded from Arrow.com.

N type handles

MCCB	N type handle
BW32	**BZ6N10D**
BW50	
BW63	
BW100	
BW125	**BW9N0CA**
BW160 BW250	**BW9N0GA**
BW400	**BW9N0HA**
BW630 BW800	**BW9N0JA**

V type handles

MCCB	V type handle
BW32	**BZ6V10D**
BW50	
BW63	
BW100	
BW125	**BW9V0CA**
BW160 BW250	**BW9V0GA**
BW400	**BW9V0HA**
BW630 BW800	**BW9V0JA**

F type handles

MCCB	N type handle
BW125	**BW9F0CA**
BW250	**BW9F0GA**
BW400	**BW9F0HA**

■ Type number nomenclature

• N type handle

BW9N0CA – □

- **Mounting** (For BZ6N10D, BW9N0HA, BW9N0JA)
  - Blank: Front mounting, front connection
  - X: Front mounting, rear connection
  - P: Plug-in mounting
- **Basic type**

• V type handle

BW9V0CA – □

- **Mounting** (For BZ6V10D, BW9V0HA, BW9V0JA)
  - Blank: Front mounting, front connection
  - X: Front mounting, rear connection
  - P: Plug-in mounting
- **Basic type**

Note:
To order a V handle for front-mounting rear connection breakers, add "-X" to the type number; for plug-in mounting breakers, add "-P" to the type number.

• F type handle

BW9F0 □ A

- **Breaker type**
  - C: BW125□U
  - G: BW250□U
  - H: BW400□U
- **Basic type**

Cable (For F type)

BW9FW □ A – □ A

- **Cable length**
  - 15: 1.5m
  - 20: 2.0m
  - 30: 3.0m
- **Breaker type**
  - C: BW125□U
  - G: BW250□U
  - H: BW400□U
- **Basic type**

Terminal cover (For F type)

BW9FBT □ A – L3

- **Breaker type**
  - C: BW125□U
  - G: BW250□U
  - H: BW400□U
- **Basic type**

Downloaded from Arrow.com.

■ Dimensions, mm

N type handle

• BZ6N10D

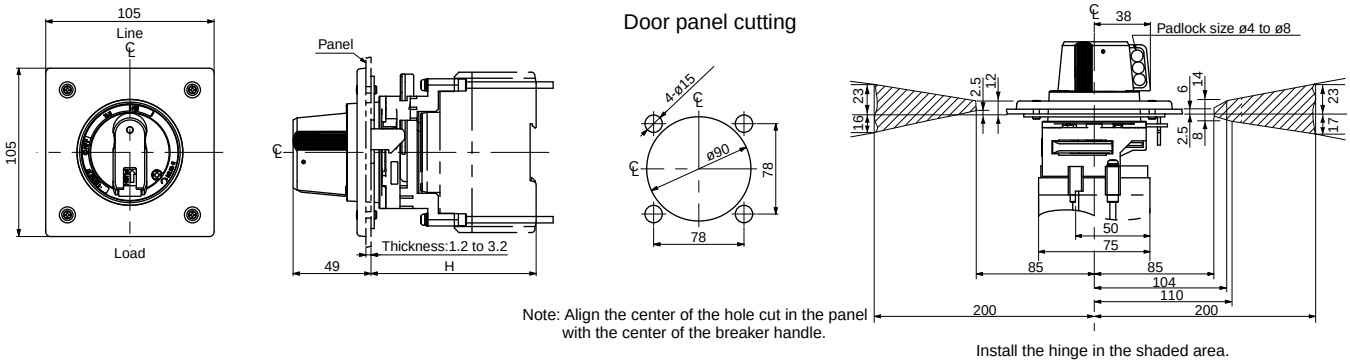

Note: Align the center of the hole cut in the panel with the center of the breaker handle.

MCCB	Handle type	Dust proof packing	Mounting screw	H (mm)	Mass (kg)
BW32	**BZ6N10D**	Provided	M4 x 85	103	0.47
BW50	**BZ6N10D-X**	Provided	Contact FUJI.	111	
BW63	**BZ6N10D-P**			111	
BW100					

• BW9N0CA, BW9N0GA

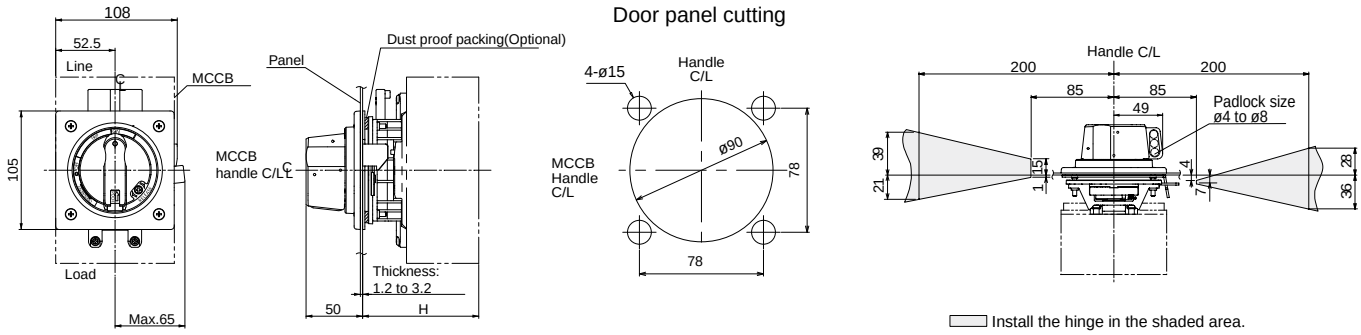

Note: Align the center of the hole cut in the panel with the center of the breaker handle.

MCCB	Handle type	Dust proof packing	Mounting screw	H (mm)	Mass (kg)
BW125	**BW9N0CA*1**	BZ-NP-1C	M4 x 85	103±2	0.56
BW160	**BW9N0GA*2**	BZ-NP-1C	M4 x 85	103±2	0.56
BW250					

Notes:
- The handle lock bars do not hold the entire door. Obtain a support bracket for the panel separately.
- Remove the handle lock bar before opening the door. (Turn the handle in the open direction.) The lock bar will be damaged if the door is opened with force while the lock bar is engaged.
- Engage the door interlock securely before turning ON the power.

*1 The Terminal Cover and Handle cannot be attached at the same time for the BW125JAG-2P or BW125RAGU-2P. Select the BW125JAG-3P or BW125RAGU-3P to use a Handle.

*2 The terminal cover will cover the mounting screws for the Breaker. When attaching the terminal cover, a portion of the terminal cover will need to be removed. Remove portion A in the following diagram.

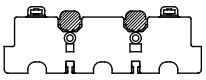

Downloaded from Arrow.com.

• **BW9N0HA, BW9N0JA**

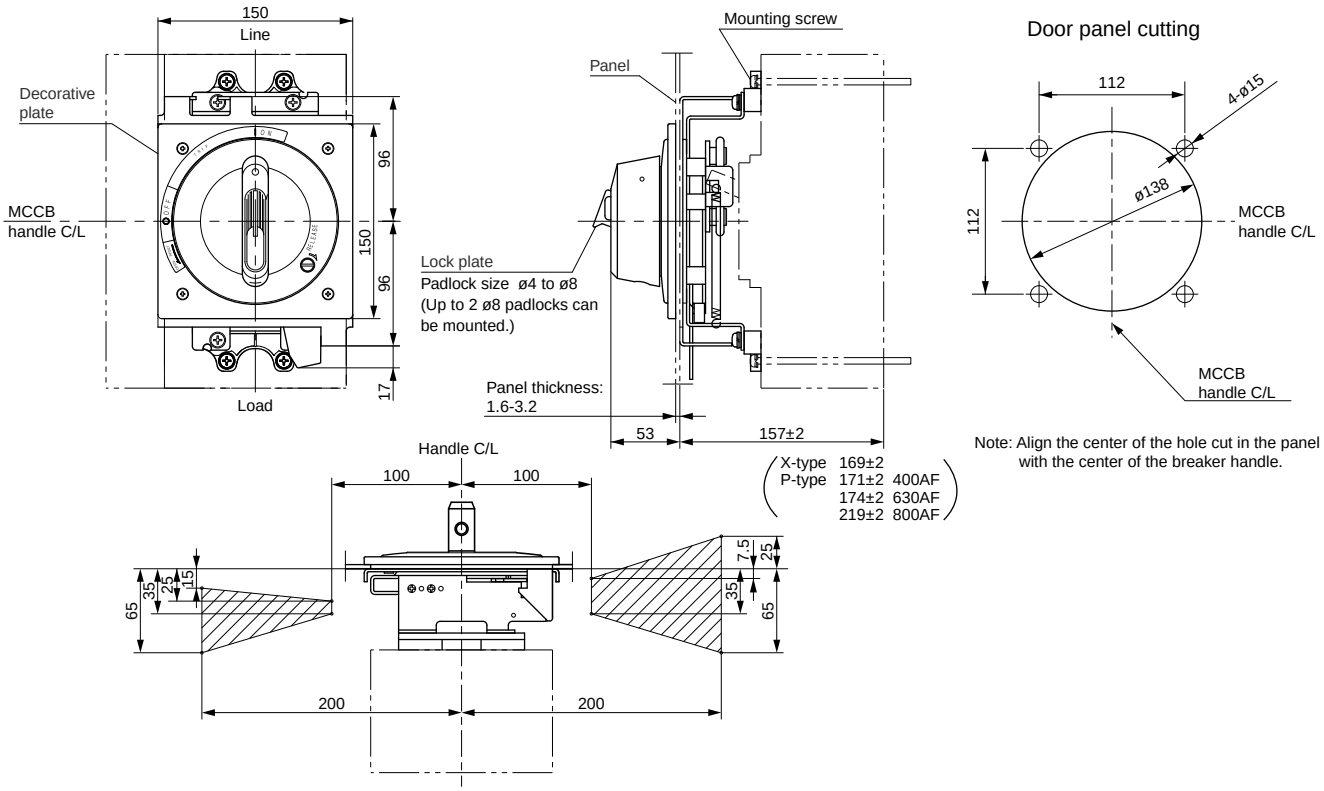

Install the door hinge in the shaded area.

MCCB	Handle type	Dust proof packing	Mounting screw	Mass (kg)
BW400	**BW9N0HA** **BW9N0HA-X** **BW9N0HA-P**	BZ-NP-2	M6 x 110 M6 x 115 Contact FUJI.	1.9
BW630 BW800	**BW9N0JA** **BW9N0JA-X** **BW9N0JA-P**	BZ-NP-2	M6 x 110 M6 x 115 Contact FUJI.	1.9

Notes:
- The handle lock bars do not hold the entire door. Obtain a support bracket for the panel separately.
- Remove the handle lock bar before opening the door. (Turn the handle in the open direction.)
  The lock bar will be damaged if the door is opened with force while the lock bar is engaged.
- Engage the door interlock securely before turning ON the power.
- Not available for side mounting.

Downloaded from Arrow.com.

■ Dimensions, mm

V type handle

• BZ6V10D

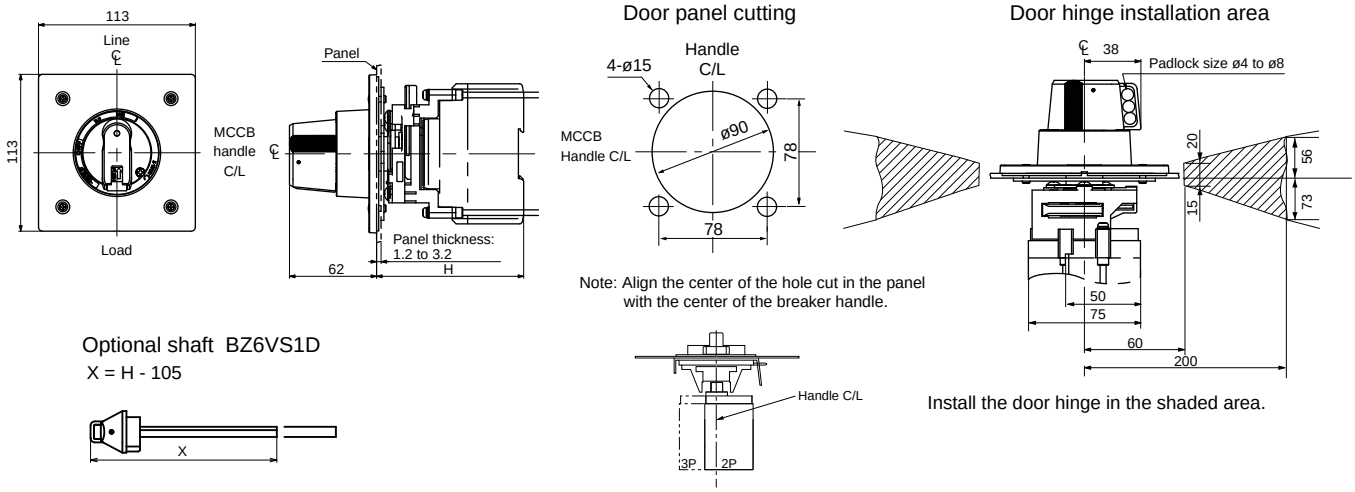

• BW9V0CA, BW9V0GA

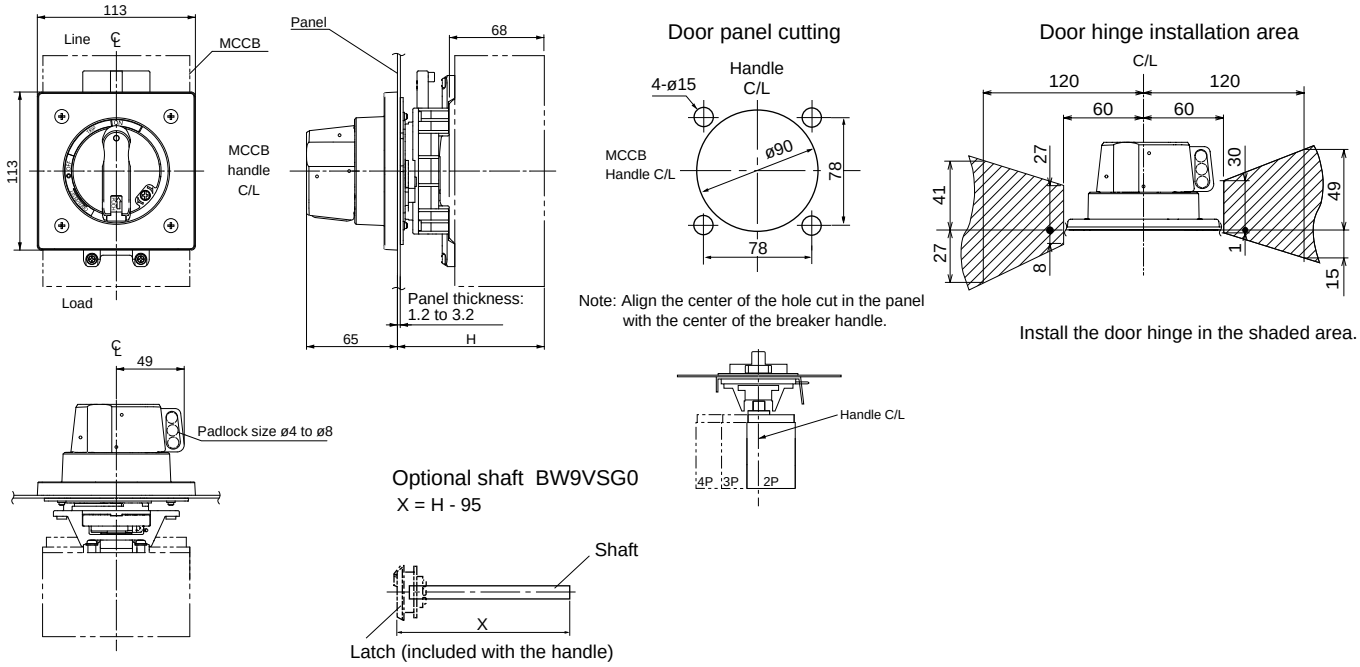

Downloaded from Arrow.com.

MCCB	Handle type	Optional shaft	Standard type H	With the optional shaft (X=154)		Mounting screw	Mass (kg)
				H	Area in which the hinge with H can be installed		
BW32 BW50 BW63 BW100	**BZ6V10D**	BZ6VS1D	105±2	250±2	140 to 250	M4 x 80	0.64
	BZ6V10D-X		113±2	258±2	150 to 258	Contact FUJI.	0.64
	BZ6V10D-P		113±2	258±2	150 to 258	Contact FUJI.	0.64
BW125	**BW9V0CA**	BW9VSG0	105±2	250±2	140 to 250	M4 x 85	0.67
BW160*2 BW250*2	**BW9V0GA**		105±2	250±2	140 to 250	M4 x 85	0.67

Notes: • The handle lock bars do not hold the entire door. Obtain a support bracket for the panel separately.
• Remove the handle lock bar before opening the door. (Turn the handle in the open direction.)
The lock bar will be damaged if the door is opened with force while the lock bar is engaged.
• Engage the door interlock securely before turning ON the power.
• Not available for side mounting.
*1 The Terminal Cover and Handle cannot be attached at the same time for the BW125JAG-2P or BW125RAGU-2P. Select the BW125JAG-3P or BW125RAGU-3P to use a Handle.
*2 The terminal cover will cover the mounting screws for the Breaker. When attaching the terminal cover, a portion of the terminal cover will need to be removed. Remove portion A in the following diagram.

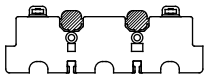

Downloaded from Arrow.com.

• **BW9V0HA, BW9V0JA**

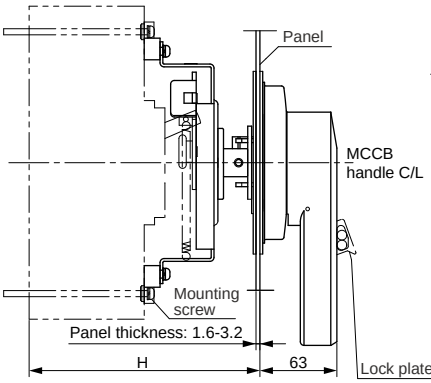

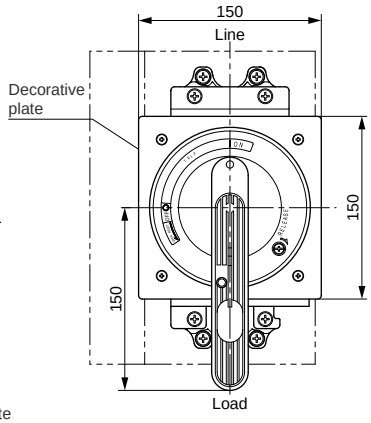

Lock plate
Padlock size ø4 to ø8
(Up to 2 ø8 padlocks can be mounted.)

Door panel cutting

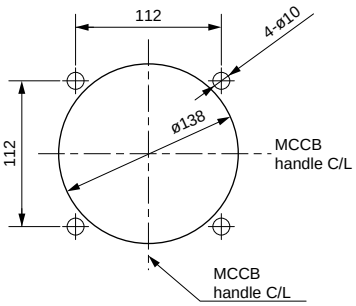

Note: Align the center of the hole cut in the panel with the center of the breaker handle.

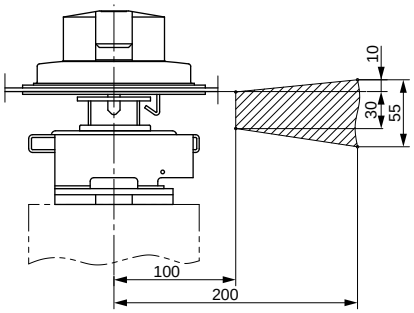

Install the door hinge in the shaded area.

Optional shaft (BZ-VS2)

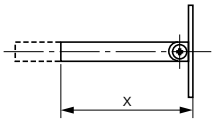

When using the BZ-VS2 extension shaft to adjust dimension H, cut it according to the equation below.
X=H−161.5

MCCB	Handle type	Optional shaft	Standard type H	With the optional shaft (X=154)		Mass (kg)
				H	Area in which the hinge with H can be installed	
BW400	**BW9V0HA**	BZ-VS2	190±2	250±2	202 to 250	2.2
	BW9V0HA-X		202±2	262±2	214 to 262	
	BW9V0HA-P		204±2	264±2	216 to 264	
BW630	**BW9V0JA**		190±2	250±2	202 to 250	
	BW9V0JA-X		202±2	262±2	214 to 262	
	BW9V0JA-P		207±2	267±2	219 to 269	
BW800	**BW9V0JA**		190±2	250±2	202 to 250	
	BW9V0JA-X		202±2	262±2	214 to 262	
	BW9V0JA-P		252±2	312±2	264 to 312	

Notes:
- The handle lock bars do not hold the entire door. Obtain a support bracket for the panel separately.
- Remove the handle lock bar before opening the door. (Turn the handle in the open direction.)
  The lock bar will be damaged if the door is opened with force while the lock bar is engaged.
- Engage the door interlock securely before turning ON the power.
- Not available for side mounting.

Downloaded from Arrow.com.

■ Dimensions, mm

F type handle

• BW9F0CA

Drive section

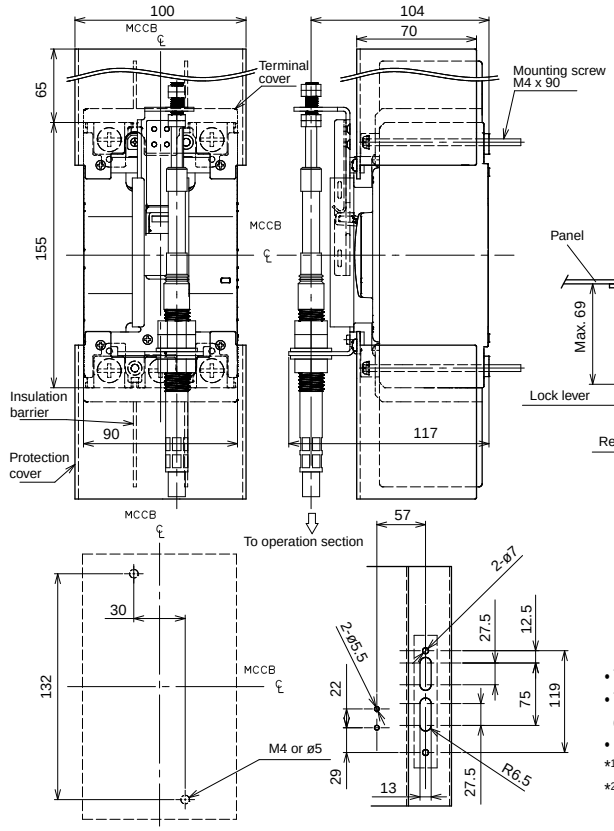

Panel drilling

Operation section

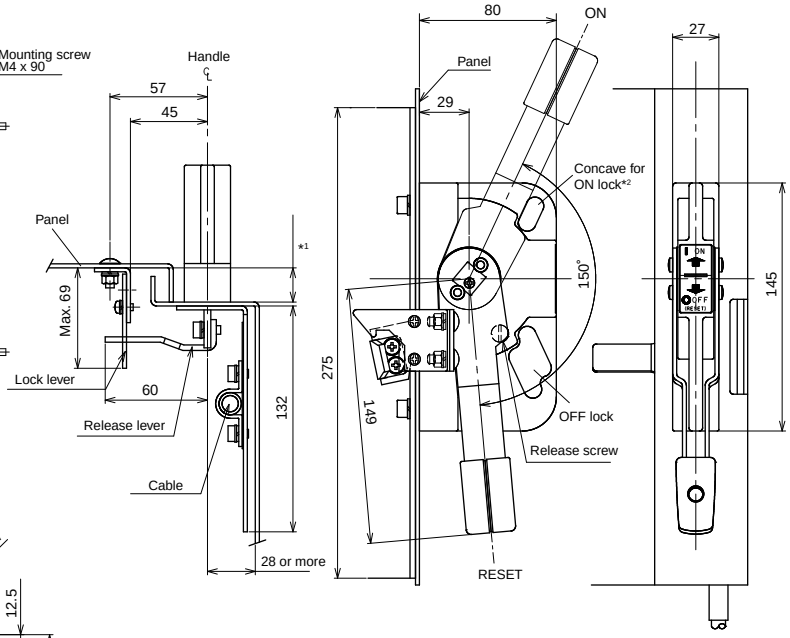

- This product consists of a drive section and an operation section.
- The operation section can be mounted either to the right or to the left on the panel depending on the mounting position of the release lever.
- For the OFF lock, 3 ø10 padlocks can be mounted; for the ON lock, 2 ø10 padlocks.

*1 Set the height to 20 or 30. Adjust the lock lever depending on the setting.
*2 The ON lock can be realized by additionally creating a concave for the ON lock.

• BW9F0GA

Drive section

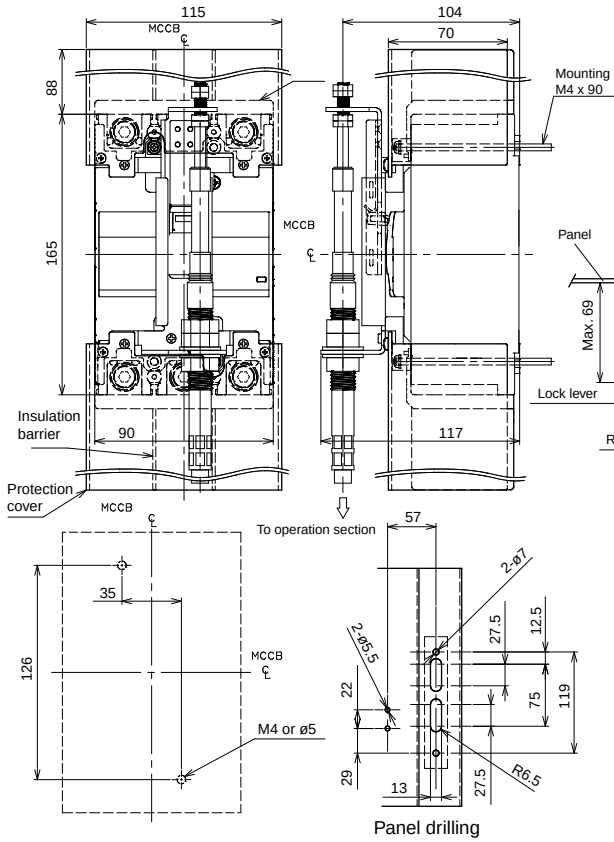

Panel drilling

Operation section

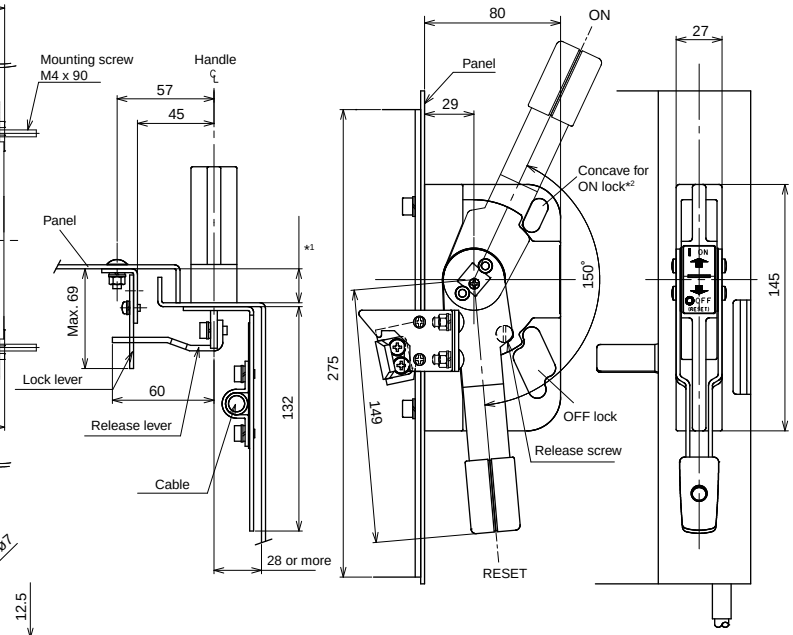

- This product consists of a drive section and an operation section.
- The operation section can be mounted either to the right or to the left on the panel depending on the mounting position of the release lever.
- For the OFF lock, 3 ø10 padlocks can be mounted; for the ON lock, 2 ø10 padlocks.

*1 Set the height to 20 or 30. Adjust the lock lever depending on the setting.
*2 The ON lock can be realized by additionally creating a concave for the ON lock.

Downloaded from Arrow.com.

• **BW9F0HA**

Drive section

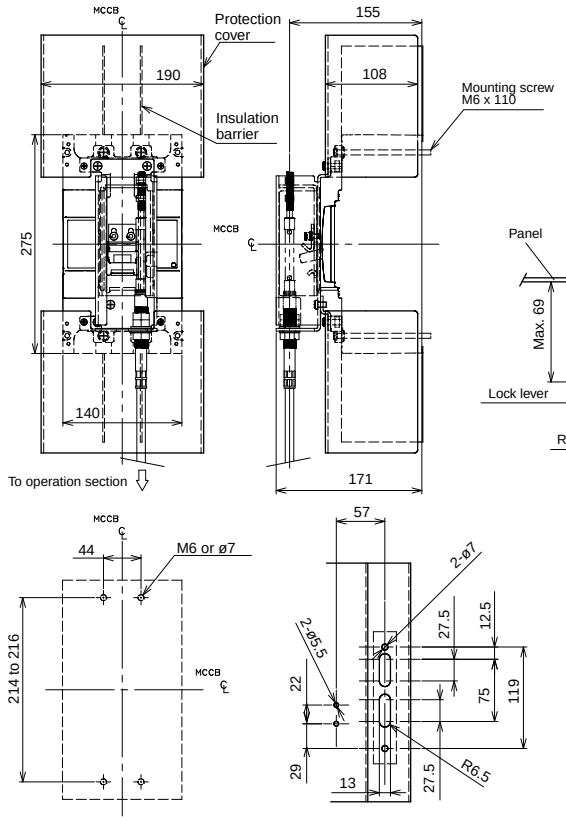

Panel drilling

Operation section

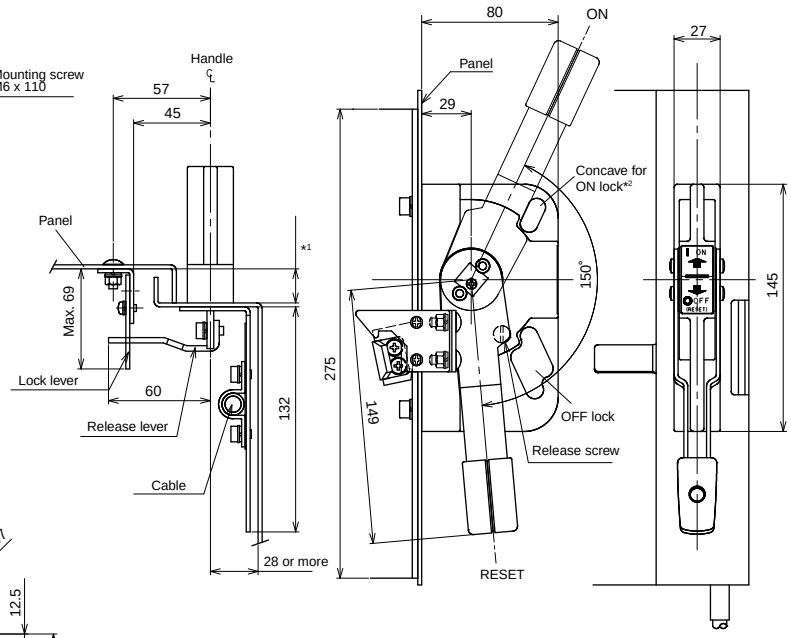

• This product consists of a drive section and an operation section.
• The operation section can be mounted either to the right or to the left on the panel depending on the mounting position of the release lever.
• For the OFF lock, 3 ø10 padlocks can be mounted; for the ON lock, 2 ø10 padlocks.
*1 Set the height to 20 or 30. Adjust the lock lever depending on the setting.
*2 The ON lock can be realized by additionally creating a concave for the ON lock.

MCCB *	Handle type	Cable		Terminal cover
		Type	Length (m)	
BW125JAGU-3P BW125RAGU-2P BW125RAGU-3P	**BW9F0CA**	**BW9FWCA-15A** **BW9FWCA-20A** **BW9FWCA-30A**	1.5 2.0 3.0	**BW9FBTCA-L3**
BW250EAGU-2P BW250EAGU-3P BW250JAGU-2P BW250JAGU-3P BW250RAGU-2P BW250RAGU-3P	**BW9F0GA**	**BW9FWGA-15A** **BW9FWGA-20A** **BW9FWGA-30A**	1.5 2.0 3.0	**BW9FBTGA-L3**
BW400EAGU-2P BW400EAGU-3P BW400SAGU-2P BW400SAGU-3P BW400RAGU-2P BW400RAGU-3P BW400HAGU-2P BW400HAGU-3P	**BW9F0HA**	**BW9FWHA-15A** **BW9FWHA-20A** **BW9FWHA-30A**	1.5 2.0 3.0	**BW9FBTHA-L3**

Note: * Not available for BW125JAGU-2P

Downloaded from Arrow.com.

Steel enclosures

■ Description

Steel enclosures are available in three types — two with V-type handle which allows the operation from the outside and other with the operating handle of the breaker extending from it to allow it to be directly switched ON or OFF from outside the enclosure.
Enclosures with V-type handles are provided with a door interlocking mechanism which prevents the door from being opened in the ON condition.
Knockout holes for wiring use are provided as shown in the diagram.

Standard | **Dustproof** AF96-175 | **Rainproof** CP97-2636

■ Type of enclosures

MCCB	Enclosure		
	Standard *1	With V-type handle Dustproof *1*2	Rainproof *1*2
BW32 BW50 BW63	**BZ6C10C2 *3** **BZ6C10C3**	**BW9UVBA-3A *3**	**BW9UWBA-3A *3**
BW100	**BZ6C25C2 *3** **BZ6C25C3 *3**	**BW9UVBA-3B *3**	**BW9UWBA-3B *3**
BW125	**BW9UCCA-2** **BW9UCCA-3**	**BW9UVCA-3**	**BW9UWCA-3**
BW250	**BW9UCGA-3**	**BW9UVGA-3**	**BW9UWGA-3**
BW400	**BZ-C60B**	**BW9UVHA-3**	**BW9UWHA-3**
BW630 BW800	**BZ-C70B**	**BW9UVJA-3**	**–**

*1 No models are available for four-pole products.
*2 The appearance of dust-proof and rain-proof models differs from the photograph (400A frames and higher).
*3 Combination with external accessories(R) is not possible.

■ Ordering information

Specify the following:
1. Type number of enclosures

Downloaded from Arrow.com.

■ Dimensions, mm

Fig.1 Standard

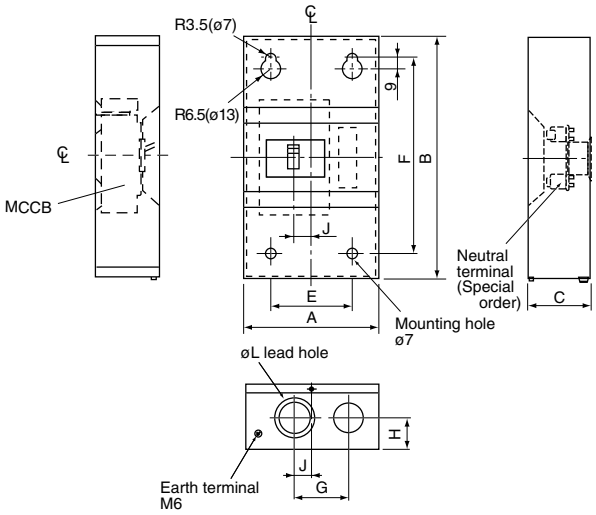

Fig.2 With V type handle
BW9UVBA-3A, BW9UVBA-3B
BW9UVCA-3, BW9UVGA-3

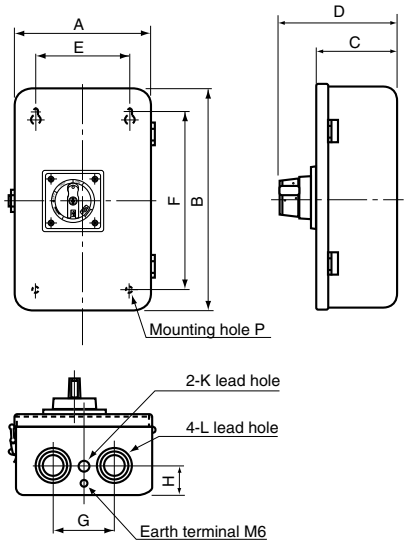

Fig3. With V type handle
BW9UVHA-3, BW9UVJA-3

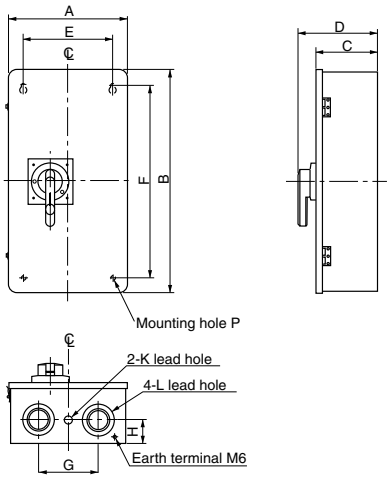

■ Connection method diagrams

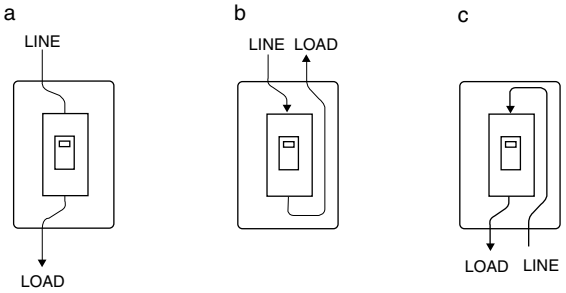

Type	Connection	Fig.	A	B	C	D	E	F	G	H	J	K	L	P
BZ6C10C2	a, b, c	1	135	225	95	–	90	170	65	40	25	–	ø35, ø22	–
BZ6C10C3														
BZ6C25C2			200	320	95	–	120	240	80	40	25	–	ø45, ø30	–
BZ6C25C3														
BW9UCCA-2			200	320	103	–	120	240	80	40	25	–	ø45, ø30	–
BW9UCCA-3														
BW9UCGA-3				360				280		45			ø55, ø40	
BZ-C60B			400	750	175	–	300	650	200	80	100	–	ø106, ø78, ø63	–
BZ-C70B														
BW9UVBA-3A		2	180	300	114	178.5	100	220	70	40	–	–	ø28, ø35, ø43	ø7
BW9UVBA-3B			250	400	142	206.5	170	320	110	50	–	ø23	ø35, ø52, ø63	ø9
BW9UVCA-3						207								
BW9UVGA-3														
BW9UVHA-3		3	400	750	206	269	300	650	200	80	–	ø28	ø63, ø78, ø106	ø12
BW9UVJA-3														

Downloaded from Arrow.com.

Terminal covers

■ Description

These terminal covers are used as guards to prevent accidental touch with live line terminations.
These terminal covers can be fitted to either line or load side.

● Up to 400AF
Short type: BW9BT □ A-S □
- Snap-on fitting

Long type: BW9BT □ A-L □
- Crimp connection use

● 630, 800AF
Long type: BW9BTJA-L □
- Transparent

Short type

Long type

Long type

Type		No. of poles	MCCB	Dimensions (mm)			Packing quantity	Appearance
Transparent	Gray			A	B	C		
BW9BTAA-L2	**BW9BTAA-L2W**	2	BW32□-2P BW50□-2P BW63□-2P BW100□-2P	50	40	53	2	• Preventing exposure of live section when amplifier's terminals are connected • Snap-on mounting
BW9BTAA-L3	**BW9BTAA-L3W**	2, 3	BW32□-3P BW50□-3P BW63□-3P BW100□-3P	75	40	53	2	
BW9BTCA-L2	**BW9BTCA-L2W**	2	BW125JAG-2P	60	40	66.5	2	
BW9BTCA-L3	**BW9BTCA-L3W**	2, 3	BW50HAG-2P BW50HAG-3P BW125RAG-2P BW125HAG-2P BW125□-3P	90	40	66.5	2	
BW9BTCA-C3	**–**	2, 3	BW125RAG-2P BW125□-3P	90	60	66.5	2	
BW9BTCA-L4	**BW9BTCA-L4W**	4	BW125JAG-4P BW125RAG-4P	120	40	66.5	2	
BW9BTGA-L3 *1	**BW9BTGA-L3W *1**	2, 3	BW160□-2P BW160□-3P	105	50	66.5	2	
BW9BTGA-L4 *1	**BW9BTGA-L4W *1**	4	BW160□-4P	140	50	66.5	2	
BW9BTGA-C3	**–**	2, 3	BW250□-2P BW250□-3P	105	75	66.5	2	
BW9BTGA-L3 *1	**BW9BTGA-L3W *1**	2, 3	BW250□-2P BW250□-3P	105	50	66.5	2	
BW9BTGA-L4 *1	**BW9BTGA-L4W *1**	4	BW250□-4P	140	50	66.5	2	
BW9BTHA-L3 *2	**BW9BTHA-L3W *1**	2, 3	BW400□-2P BW400□-3P	172	110	98	2	
BW9BTHA-L4 *2	**–**	4	BW400□-4P	220	110	98	2	
BW9BTJA-L3	**BW9BTJA-L3W**	3	BW630□-3P BW800□-3P	230	135	97.5	2	
BW9BTJA-L4	**BW9BTJA-L4W**	4	BW630□-4P BW800□-4P	280	155	98	2	

Downloaded from Arrow.com.

Short type

Type		No. of poles	MCCB	Dimensions (mm)			Packing quantity	Appearance
Transparent	Gray			A	B	C		
BW9BTAA-S2	**BW9BTAA-S2W**	2	BW32□-2P BW50□-2P BW63□-2P BW100□-2P	50	10	53	2	• Preventing exposure of live section when amplifier's terminals are connected • Snap-on mounting
BW9BTAA-S3	**BW9BTAA-S3W**	2, 3	BW32□-3P BW50□-3P BW63□-3P BW100□-3P	75	10	53	2	
BW9BTCA-S2P20	**BW9BTCA-S2WP20**	2	BW125JAG-2P	60	8	66.5	2	
BW9BTCA-S3P20	**BW9BTCA-S3WP20**	2, 3	BW50HAG-2P BW50HAG-3P BW125RAG-2P BW125HAG-2P BW125□-3P	90	8	66.5	2	
BW9BTCA-S4P20	**BW9BTCA-S4WP20**	4	BW125JAG-4P BW125RAG-4P	120	8	66.5	2	
BW9BTGA-S3P20 *1	**BW9BTGA-S3WP20 *1**	2, 3	BW160□-2P BW160□-3P BW250□-2P BW250□-3P	105	8	66.5	2	
BW9BTGA-S4P20 *1	**BW9BTGA-S4WP20 *1**	4	BW160□-4P BW250□-4P	140	8	66.5	2	
BW9BTHA-S3 *3	**BW9BTHA-S3W *2**	2, 3	BW400□-2P BW400□-3P	140	65	98	2	
BW9BTHA-S4 *3	**BW9BTHA-S4W *2**	4	BW400□-4P	185	65	98	2	

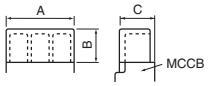

Notes: • A gray-white terminal cover comes standard with the Global Series 125AF and 250AF.
*1 When using the external operating handle, part of the terminal cover (▨) must be cut away.
*2 Crimp terminals for 325 mm^2 are not available.
*3 This type of cover can be mounted on the 400AF when flat terminals are not used.

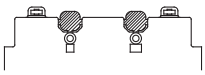

06

Downloaded from Arrow.com.

Insulation barriers

■ Description

The interphase barriers are provided on frame size of 32AF to 800AF breakers for front mounting. The barriers are installed in the molded slots between terminals.
The earth barrier is used to increase the insulation with the mounting plate surface when two crimp terminals are wired. Installation of these barriers after wiring is possible even when an external accessory is installed.

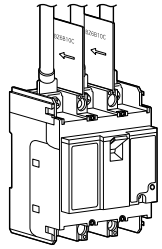

Interphase barrier

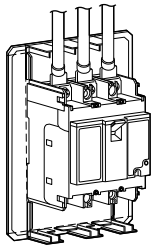

Earth barrier

Interphase barrier

MCCB	Interphase barrier				
	Type	Dimensions (mm)		Packing quantity	Mass (g)
		A	B		
BW32 BW50AAG, EAG BW50SAG, RAG BW63 BW100	**BZ6B10C**	50	49	4	23
BW50HAG, BW125	**BW9BPCA**	50	60	2	15
BW160 BW250	**BW9BPGA**	80	60	2	25
BW400 BW630 BW800	**B-43A**	105	95	4	130

Interphase barrier

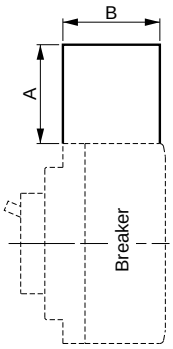

Earth barrier

MCCB	Earth barrier				
	Type	Dimensions (mm)		Packing quantity	Mass (g)
		A	B		
BW32□-2P BW50□-2P BW63□-2P BW100□-2P	**BZ6BL10C2**	100 (50, 75)*1	43 (30)*1	1	33
BW32□-3P BW50□-3P BW63□-3P BW100□-3P	**BZ6BL10C3**	125 (75, 100)*1	43 (30)*1	1	41

Note: *1 Can be cut to dimensions

Earth barrier

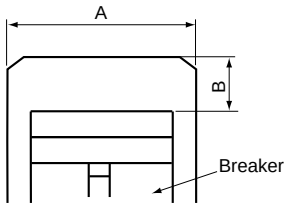

Downloaded from Arrow.com.

Padlocking device and handle locking cover

■ Description

• Padlocking device

These padlocking device lock the Breaker handle in the OFF position. Use a commercially available padlock with a shackle diameter of 3.5 to 5mm (5mm for the BZ6L10CA).

• Handle locking covers (Order Separately)

These simple handle locking covers can be easily installed by the user. Tripping is possible while the Breaker is locked ON.

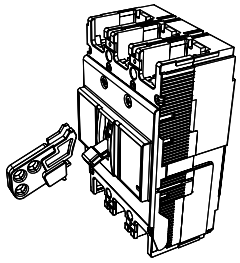

Padlocking device
• Cap type Q1,QN

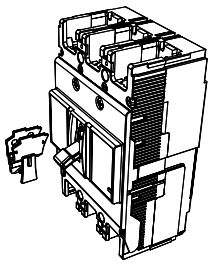

Handle locking cover

MCCB	Padlocking device			Handle locking cover
	Q1: Cap type	QN: Scissors type	Q2: Plate type	
BW32	**BZ6L10CA**	–	▲ *1*4	**BZ6L10C**
BW50AAG, EAG, SAG, RAG				
BW63				
BW100				
BW50HAG, BW125	**BW9Q1CA** *5		**BW9Q2CA** *3	**BW9L1CA**
BW160			**BW9Q2GA**	
BW250				
BW400	▲ *1	**BW9QNHA** *2	**BW9Q2HA**	**BW9L1HA**
BW630			**BW9Q2JA**	
BW800				

Notes:
*1 Specify Locks when ordering the Breaker. (▲: Factory-mounted)
*2 ON and OFF locking is possible.
*3 Not applicable to the BW125JA□-2P (models with a width of 60 mm).
*4 If a padlock is required, use a commercially available padlock with the dimensions shown in the diagram at the right.
*5 Three padlocks with shackles from 3.5 to 8 mm in diameter can be attached.

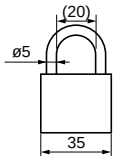

Padlocking device
• Cap type Q1

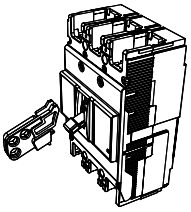

• Plate type Q2

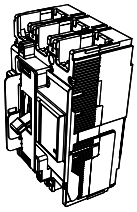

Handle locking cover

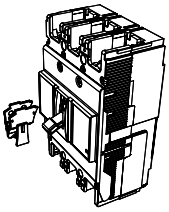

Q1: BZ6L10CA (OFF-locking Padlocking device)

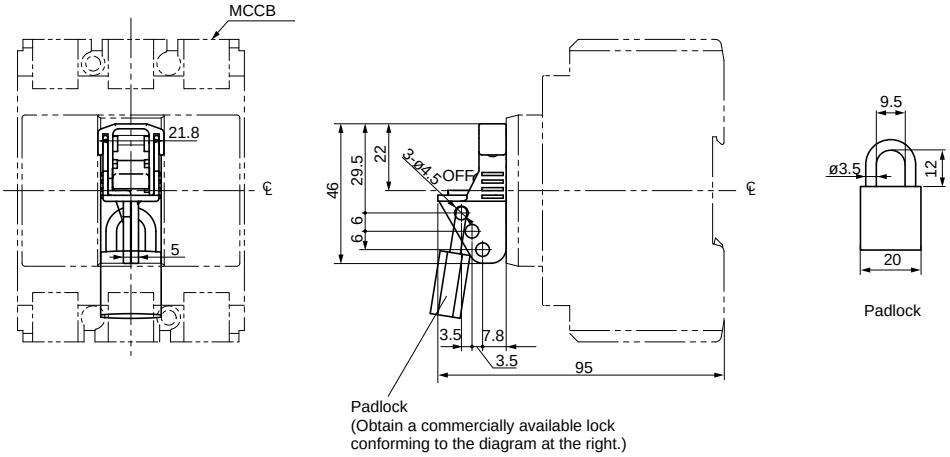

Downloaded from Arrow.com.