used for: D-SUB

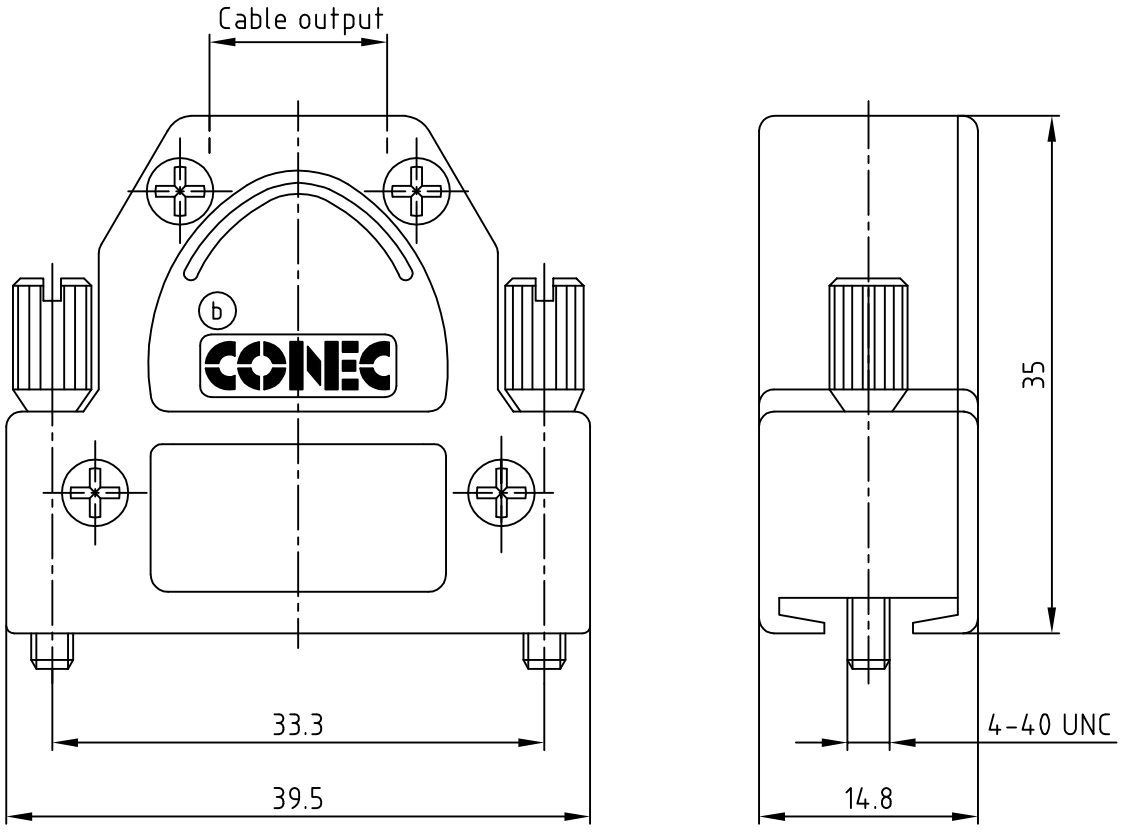

THIS DRAWING MAY NOT BE COPIED OR REPRODUCED IN ANY WAY, AND MAY NOT BE PASSED ON TO A THIRD PARTY WITHOUT WRITTEN PERMISSION.
OWNERSHIP AND COPYRIGHT OF CONEC GmbH
DO NOT ALTER CAD DRAWING BY HAND

finish:

tolerance

dim. in mm

scale: 2:1

material: HOOD: DIE-CAST ZINC

				2007	date	name
				drawn	12.04.	Schwenkler
				appd.	12.04.	Mickenbecker
				norm		
				d-old		

rev.	description	date	name
1 x b	Ä6677	28.04.2017	Unkrüer
a	Original		

title:

METAL HOOD

15pos. EMI / RFI SHIELDING
with jack screws

dwg no: 16K1A2043

AutoCAD

DIN-A 4

sh: 1/1

part no: 600X51215X

Downloaded from Arrow.com.